Hyperfast Rectifier, 2 x 10 A FRED Pt™

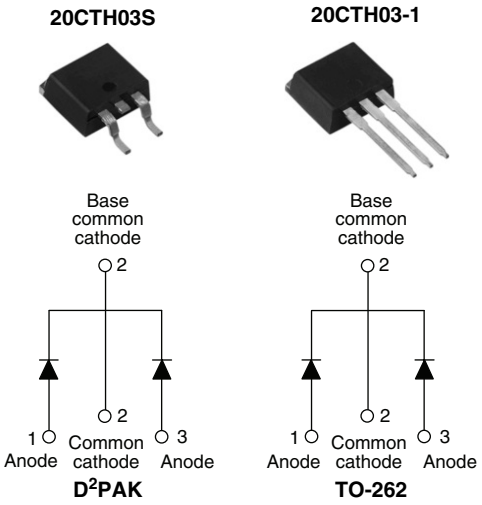

FEATURES

- Hyperfast recovery time
- Low forward voltage drop
- Low leakage current
- 175 °C operating junction temperature
- Designed and qualified for industrial level

DESCRIPTION/APPLICATIONS

300 V series are the state of the art hyperfast recovery rectifiers designed with optimized performance of forward voltage drop and hyperfast recovery time.
The planar structure and the platinum doped life time control guarantee the best overall performance, ruggedness and reliability characteristics.
These devices are intended for use in the output rectification stage of SMPS, UPS, dc-to-dc converters as well as freewheeling diode in low voltage inverters and chopper motor drives.
Their extremely optimized stored charge and low recovery current minimize the switching losses and reduce over dissipation in the switching element and snubbers.

PRODUCT SUMMARY	
t_{rr} (maximum)	35 ns
$I_{F(AV)}$	2 x 10 A
V_R	300 V

ABSOLUTE MAXIMUM RATINGS					
PARAMETER		SYMBOL	TEST CONDITIONS	MAX.	UNITS
Peak repetitive reverse voltage		V_{RRM}		300	V
Average rectified forward current	per diode	$I_{F(AV)}$	T_C = 160 °C	10	A
	per device			20	
Non-repetitive peak surge current		I_{FSM}	T_J = 25 °C	120	
Operating junction and storage temperatures		T_J, T_{Stg}		- 65 to 175	°C

ELECTRICAL SPECIFICATIONS (T_J = 25 °C unless otherwise specified)						
PARAMETER	SYMBOL	TEST CONDITIONS	MIN.	TYP.	MAX.	UNITS
Breakdown voltage, blocking voltage	V_{BR}, V_R	I_R = 100 µA	300	-	-	V
Forward voltage	V_F	I_F = 10 A	-	1.05	1.25	
		I_F = 10 A, T_J = 125 °C	-	0.85	0.95	
Reverse leakage current	I_R	V_R = V_R rated	-	-	20	µA
		T_J = 125 °C, V_R = V_R rated	-	6	200	
Junction capacitance	C_T	V_R = 300 V	-	30	-	pF
Series inductance	L_S	Measured lead to lead 5 mm from package body	-	8	-	nH

DYNAMIC RECOVERY CHARACTERISTICS (T_C = 25 °C unless otherwise specified)							
PARAMETER	SYMBOL	TEST CONDITIONS		MIN.	TYP.	MAX.	UNITS
Reverse recovery time	t_{rr}	I_F = 1.0 A, dI_F/dt = 50 A/µs, V_R = 30 V		-	-	35	ns
		I_F = 1.0 A, dI_F/dt = 100 A/µs, V_R = 30 V		-	-	30	
		T_J = 25 °C	I_F = 10 A dI_F/dt = 200 A/µs V_R = 200 V	-	31	-	
		T_J = 125 °C		-	42	-	
Peak recovery current	I_{RRM}	T_J = 25 °C		-	2.4	-	A
		T_J = 125 °C		-	5.6	-	
Reverse recovery charge	Q_{rr}	T_J = 25 °C		-	36	-	nC
		T_J = 125 °C		-	120	-	

THERMAL - MECHANICAL SPECIFICATIONS						
PARAMETER	SYMBOL	TEST CONDITIONS	MIN.	TYP.	MAX.	UNITS
Maximum junction and storage temperature range	T_J, T_{Stg}		- 65	-	175	°C
Thermal resistance, junction to case per diode	R_{thJC}		-	-	1.5	°C/W
Weight			-	2.0	-	g
			-	0.07	-	oz.
Mounting torque			6.0 (5.0)	-	12 (10)	kgf · cm (lbf · in)
Marking device		Case style D^2PAK	20CTH03S			
		Case style TO-262	20CTH03-1			

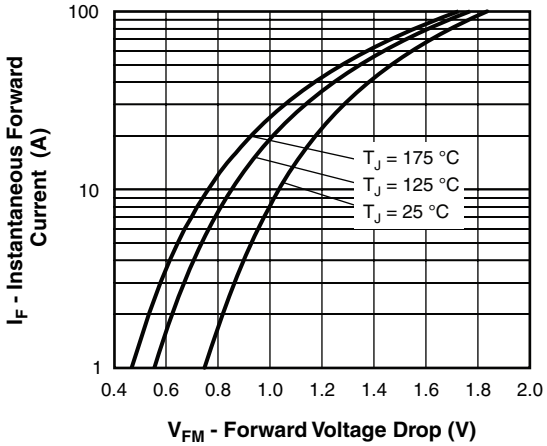

Fig. 1 - Maximum Forward Voltage Drop Characteristics

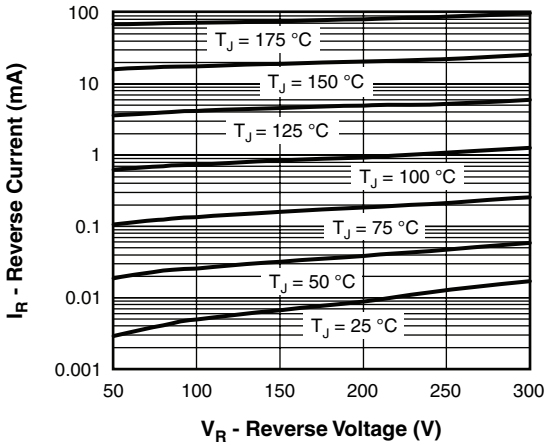

Fig. 2 - Typical Values of Reverse Current vs. Reverse Voltage

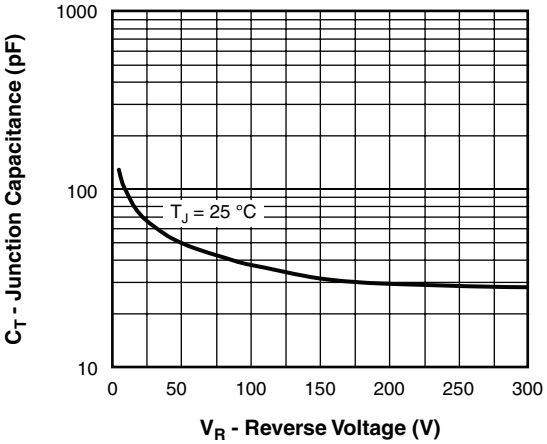

Fig. 3 - Typical Junction Capacitance vs. Reverse Voltage

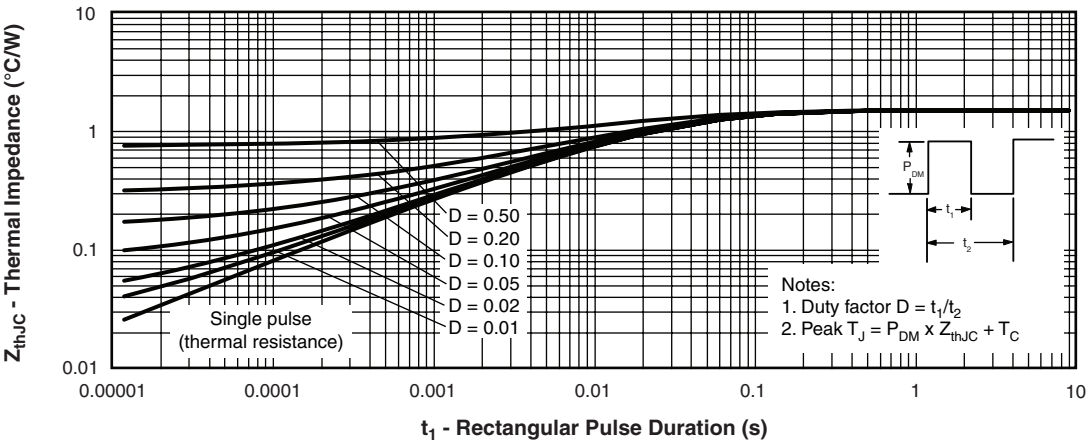

Fig. 4 - Maximum Thermal Impedance Z_{thJC} Characteristics

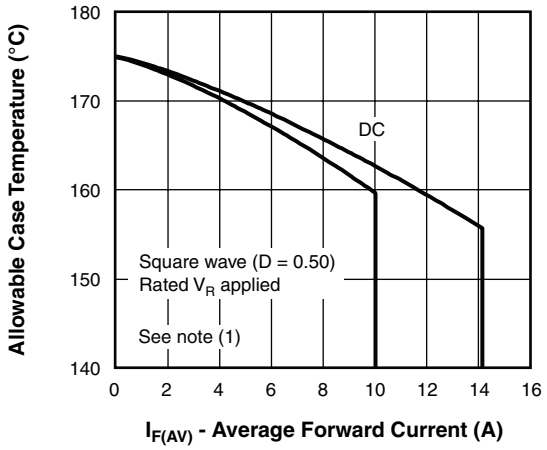

Fig. 5 - Maximum Allowable Case Temperature vs. Average Forward Current

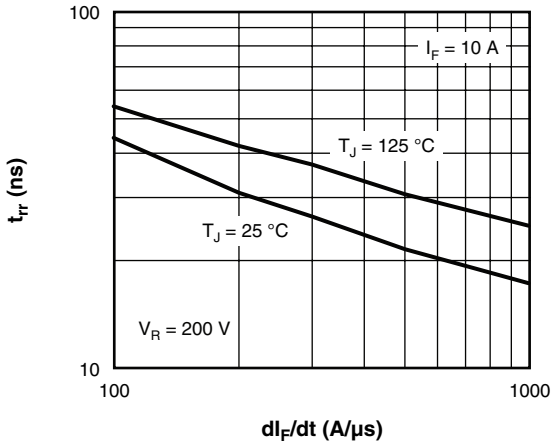

Fig. 7 - Typical Reverse Recovery Time vs. dI_F/dt

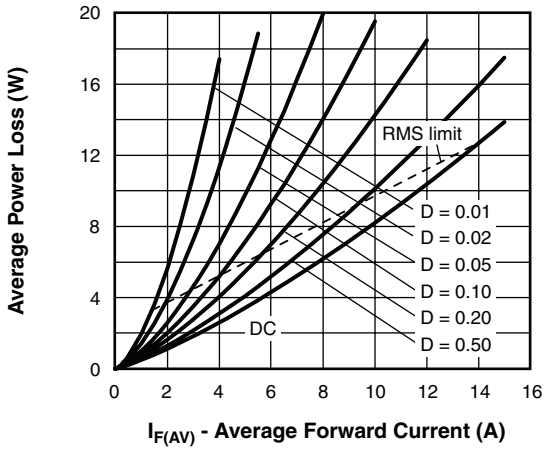

Fig. 6 - Forward Power Loss Characteristics

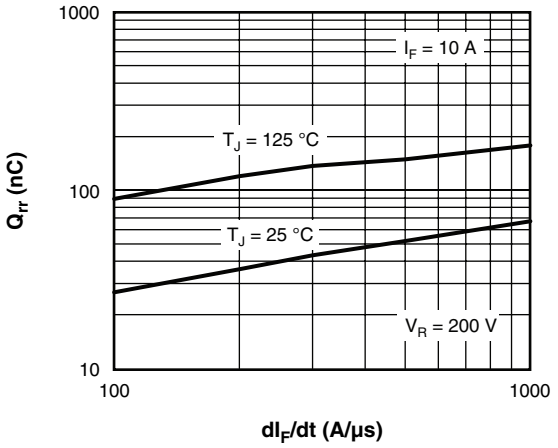

Fig. 8 - Typical Stored Charge vs. dI_F/dt

Note

(1) Formula used: $T_C = T_J - (Pd + Pd_{REV}) \times R_{thJC}$;
Pd = Forward power loss = $I_{F(AV)} \times V_{FM}$ at ($I_{F(AV)}/D$) (see fig. 6);
Pd_{REV} = Inverse power loss = $V_{R1} \times I_R (1 - D)$; I_R at V_{R1} = Rated V_R

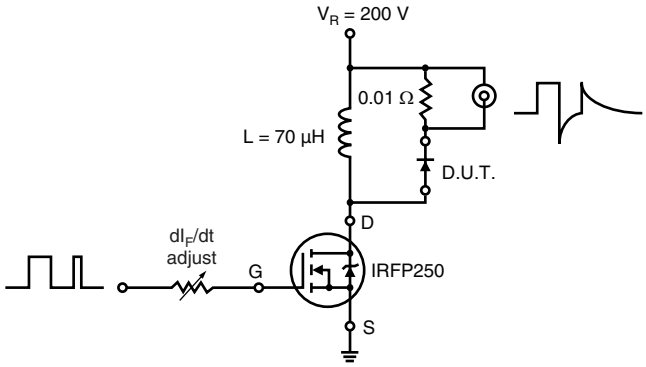

Fig. 9 - Reverse Recovery Parameter Test Circuit

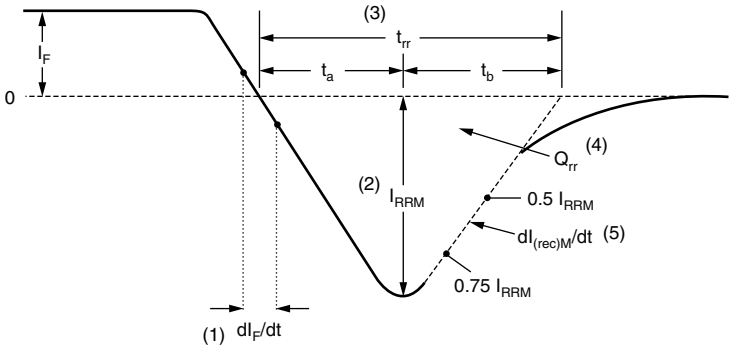

(1) dI_F/dt - rate of change of current through zero crossing

(2) I_{RRM} - peak reverse recovery current

(3) t_{rr} - reverse recovery time measured from zero crossing point of negative going I_F to point where a line passing through 0.75 I_{RRM} and 0.50 I_{RRM} extrapolated to zero current.

(4) Q_{rr} - area under curve defined by t_{rr} and I_{RRM}

$$Q_{rr} = \frac{t_{rr} \times I_{RRM}}{2}$$

(5) $dI_{(rec)M}/dt$ - peak rate of change of current during t_b portion of t_{rr}

Fig. 10 - Reverse Recovery Waveform and Definitions

ORDERING INFORMATION TABLE

Device code	20	C	T	H	03	S	TRL	-
	1	2	3	4	5	6	7	8

1 - Current rating (20 A)
2 - C = Common cathode
3 - T = TO-220, D^2PAK
4 - H = Hyperfast recovery
5 - Voltage rating (03 = 300 V)
6 - • S = D^2PAK
• -1 = TO-262
7 - • None = Tube (50 pieces)
• TRL = Tape and reel (left oriented, for D^2PAK package)
• TRR = Tape and reel (right oriented, for D^2PAK package)
8 - • None = Standard production
• PbF = Lead (Pb)-free

LINKS TO RELATED DOCUMENTS	
Dimensions	http://www.vishay.com/doc?95014
Part marking information	http://www.vishay.com/doc?95008
Packaging information	http://www.vishay.com/doc?95032

Disclaimer

All product specifications and data are subject to change without notice.

Vishay Intertechnology, Inc., its affiliates, agents, and employees, and all persons acting on its or their behalf (collectively, “Vishay”), disclaim any and all liability for any errors, inaccuracies or incompleteness contained herein or in any other disclosure relating to any product.

Vishay disclaims any and all liability arising out of the use or application of any product described herein or of any information provided herein to the maximum extent permitted by law. The product specifications do not expand or otherwise modify Vishay’s terms and conditions of purchase, including but not limited to the warranty expressed therein, which apply to these products.

No license, express or implied, by estoppel or otherwise, to any intellectual property rights is granted by this document or by any conduct of Vishay.

The products shown herein are not designed for use in medical, life-saving, or life-sustaining applications unless otherwise expressly indicated. Customers using or selling Vishay products not expressly indicated for use in such applications do so entirely at their own risk and agree to fully indemnify Vishay for any damages arising or resulting from such use or sale. Please contact authorized Vishay personnel to obtain written terms and conditions regarding products designed for such applications.

Product names and markings noted herein may be trademarks of their respective owners.

НИОКР СИСТЕМС

ООО «НИОКРсистемс» - это оперативные поставки широкого спектра электронных компонентов отечественного и импортного производства напрямую от производителей и с крупнейших мировых складов. Реализуемая нашей компанией продукция насчитывает более полумиллиона наименований.

Благодаря этому наша компания предлагает к поставке практически не ограниченный ассортимент компонентов как оптовыми, мелкооптовыми партиями, так и в розницу.

Благодаря развитой сети поставщиков, помогаем в поиске и приобретении экзотичных или снятых с производства компонентов.

Наша компания это:

- Гарантия качества поставляемой продукции
- Широкий ассортимент
- Минимальные сроки поставок
- Техническая поддержка
- Подбор комплектации
- Индивидуальный подход
- Гибкое ценообразование
- Работаем по 275 ФЗ

ООО «НИОКР СИТЕМС»
Москва, 125362, Россия, ул. Вишневая, д. 9, к. 1, Блок 104 а и 104 в

Телефон: 8 (495) 268-14-82
Email: n@nsistems.ru

ИНН: 7735154786
ОГРН: 1167746717709