RoHS 481 Series Alarm Indicating Fuse

Description

481 Series alarm indicating fuses are designed to reduce down time by immediately pinpointing the blown (open) circuit while triggering an LED or audio alarm. This item requires 482 Series mating fuse holder.

All ranges of 481 Series fuses are available as our original design, and the 2-20 amp range is now available as a RoHS compliant option (use the "P" designator when ordering). See the part numbering section of this data sheet for related ordering instructions.

Agency Approvals

Agency	Agency File Number
	E71611
	LR 29862

Electrical Characteristics

% of Ampere Rating	Opening Time
100%	10 Minutes, Minimum
150%	5 Minutes, Maximum

Features

- Color-coded indicator flags indicate ampere rating.
- Clear plastic lens option available for additional safety.
- Body is constructed of black plolyphenylene sulfide with UL-94V0 flammability rating.
- Contacts made of bright alloy-plated beryillioum copper.

Applications

Ideal for telecommunications and control panel circuits

Electrical Characteristics

Ampere Rating (A)	Amp Code	Max Voltage Rating (V)	Interrupting Rating	Body Color Code	Nominal Cold Resistance (Ohms)	Nominal Melting I^2t (A^2 Sec.)	Agency Approvals	
0.180*	.180	125 VAC & 125 VDC	450A @ 60 VDC 300A @ 125 VAC (up to 20A) 300A @ 125 VDC (up to 15A) 200A @ 125 VDC (up to 20A)	Yellow	6.25	0.00808	x	x
0.200*	.200			Red/Black	5.70	0.0140	x	x
0.250*	.250			Violet	4.20	0.0356	x	x
0.375*	.375			Gray/White	2.00	0.028	x	x
0.500*	.500			Red	1.52	0.139	x	x
0.650*	.650			Black	1.25	0.278	x	x
0.750*	.750			Brown	.980	0.363	x	x
1.00*	001.			Gray	.665	0.733	x	x
1.33*	1.33			White	.480	1.58	x	x
1.50*	01.5			Yellow/White	.385	2.55	x	x
2.00	002.			Orange	.120	5.29	x	x
2.50	02.5			Orange/White	.0904	9.46	x	x
3.00	003.			Blue	.0670	11.2	x	x
3.50	03.5			Blue/White	.0415	10.5	x	x
4.00	004.			Brown/White	.0350	15.4	x	x
5.00	005.			Green	.0285	26.2	x	x
7.50	07.5			Black/White	.0113	42.8	x	x
10.0	010.			Red/White	.00840	115.3	x	x
12.0	012.			Green/Yellow	.00660	222.5	x	x
15.0	015.			Red/Blue	.00580	294.22	x	x
20.0**	020.			Green/White	.00394	570.0	x	x

* 0.180A thru 1.5A items are not available for sale as a RoHS compliant "P" option
**20A Fuseholder must be used. Fuse is keyed to prevent insertion in lower rated holders.
20A Fuseholder is designed to accept all ratings up to 20 amperes.

© 2009 Littelfuse, Inc.
Specifications are subject to change without notice.
Please refer to www.littelfuse.com/series/481.html for current information.

Littelfuse®
Expertise Applied | Answers Delivered

Product Characteristics

Material	Body: Polyphenylene Sulfide (UL 94VO) Terminations: Beryllium Copper/Tin Plated Optional Lens: Nylon
Vibration	Per MIL-STD-202F

Operating Temperature	– 55°C to 90°C.
Thermal Shock	Withstands 5 cycles of – 55°C to 125°C
Insulation Resistance (After Opening)	Greater than 10,000 ohms.

Dimensions

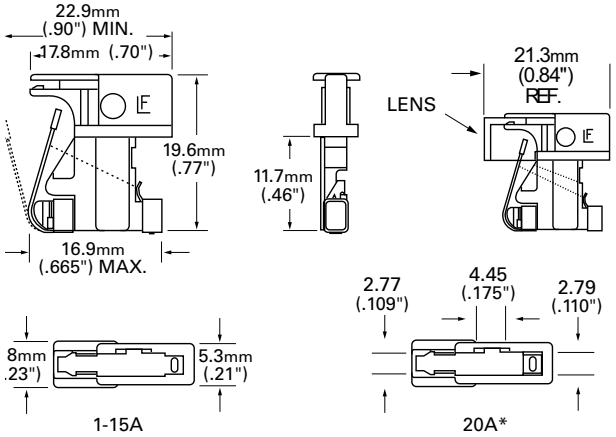

*20A Fuseholder must be used. Fuse is keyed to prevent insertion in lower rated holders. 20A Fuseholder is designed to accept all ratings up to 20 amperes.

Average Time Current Curves

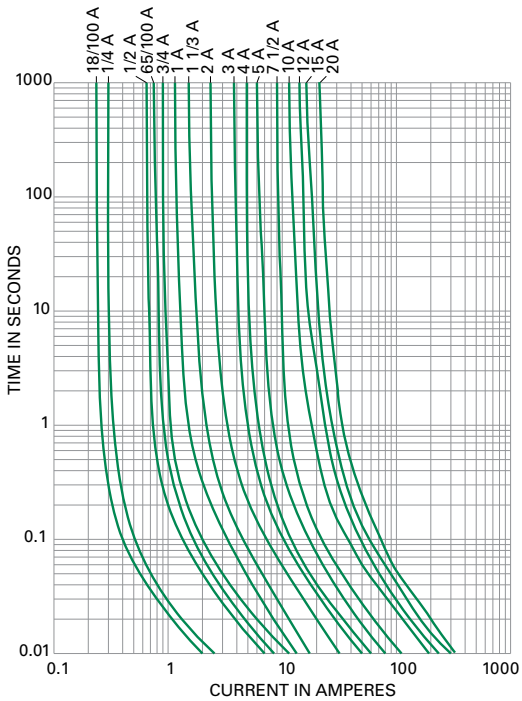

Part Numbering System

0481 .180 H XL P

- **RoHS ITEM OPTION CODE:**
  Blank = Standard design item
  P = RoHS compliant version item
  (available in 2-20 amp range only)
- **OPTION CODE:**
  Blank = Standard
  XL = Protective Lens
- **QUANTITY CODE:**
  V = 5 pack
  H = 100 pack
- **AMP CODE**
  (See Electrical Characteristics Table)
- **SERIES**

© 2009 Littelfuse, Inc.
Specifications are subject to change without notice.
Please refer to www.littelfuse.com/series/481.html for current information.

НИОКР СИСТЕМС

ООО «НИОКРсистемс» - это оперативные поставки широкого спектра электронных компонентов отечественного и импортного производства напрямую от производителей и с крупнейших мировых складов. Реализуемая нашей компанией продукция насчитывает более полумиллиона наименований.

Благодаря этому наша компания предлагает к поставке практически не ограниченный ассортимент компонентов как оптовыми, мелкооптовыми партиями, так и в розницу.

Благодаря развитой сети поставщиков, помогаем в поиске и приобретении экзотичных или снятых с производства компонентов.

Наша компания это:

- Гарантия качества поставляемой продукции
- Широкий ассортимент
- Минимальные сроки поставок
- Техническая поддержка
- Подбор комплектации
- Индивидуальный подход
- Гибкое ценообразование
- Работаем по 275 ФЗ

ООО «НИОКР СИТЕМС»
Москва, 125362, Россия, ул. Вишневая, д. 9, к. 1, Блок 104 а и 104 в

Телефон: 8 (495) 268-14-82
Email: n@nsistems.ru

ИНН: 7735154786
ОГРН: 1167746717709