GAMMA MICROELECTRONICS

GM7800 SERIES

POSITIVE VOLTAGE REGULATORS

Description

The GM7800 series are classic regulators, which are useful in a wide range of applications. For example, you can use them for local on-card regulation to eliminate the distribution and problems associated with single point regulation.

The wide range of output voltages (5V to 27V) make them useful in an endless list of applications. Although designed as fixed voltage regulators, you can add a few external components to make adjustable voltages and currents.

Current limiting prevents the peak output current to a safe value. Safe-area protection of the output transistor limits internal power dissipation. If internal power dissipation becomes too high for the heat sinking provided, the thermal shutdown circuit activates to prevent the regulator from overheating. These versatile workhorses are easy to use. You do not need to bypass the output, although this does improve transient response. Input bypass is needed only if you place the regulator far from the filter capacitor of the power supply.

The GM7800 series is available in TO-220, TO-252 and TO-263 packages.

Features

- **Output current up to 1.5A**
- **Output Voltages 5V, 6V, 8V, 8.5V, 9V, 10V, 12V, 15V, 18V, 20V, 24V and 27V**
- **3- Terminal Regulators**
- **Internal Thermal Overload Protection**
- **Internal Short-Circuit Current Limiting**
- **Output Transistor Safe-Area Protection**
- **TO-220, TO-252 and TO-263 Packages**
- **High Power Dissipation Capability**
- **Direct replacements for LM78xx**

Application

Post-Regulator Switching DC/DC Converters

Bias Supply for Analog Circuits

Instrumentation and Audio Systems

Logic Systems

Others too numerous to mention

TYPIC APPLICATION CIRCUITS

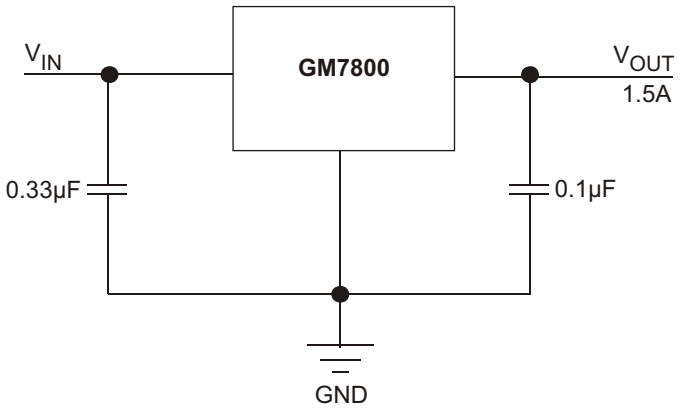

For a positive regulator, a 0.33μF bypass capacitor should be used on the input terminals. While not necessary for stability, an output capacitor of 0.1μF may be used to improve the transient response of the regulator. These capacitors should be on or as near as possible to the regulator terminals .

◆ MARKING INFORMATION & PIN CONFIGURATIONS (TOP VIEW)

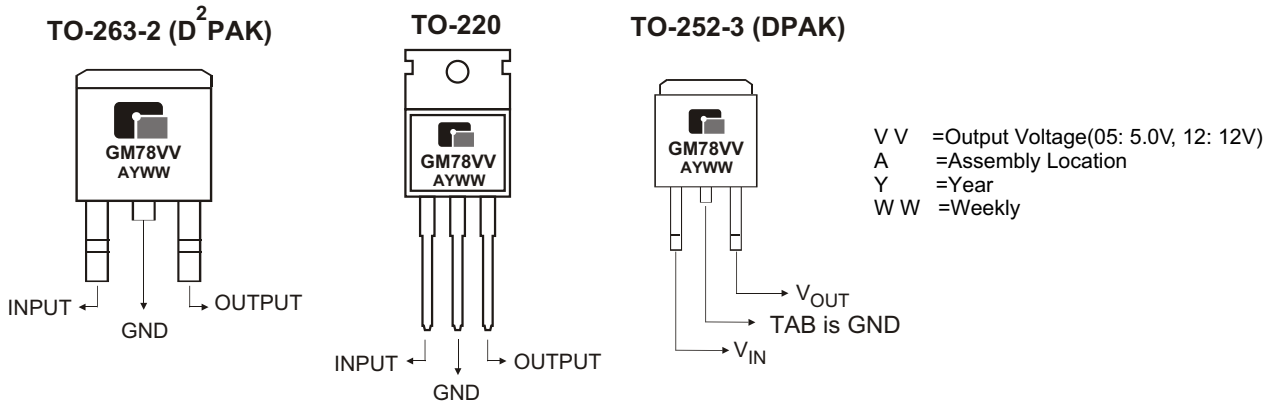

◆ ORDERING INFORMATION

Pro Number	V_{OUT}	Package
GM7805	5.0V	TO-263, TO-220, TO-252
GM7806	6.0V	TO-263, TO-220, TO-252
GM7808	8.0V	TO-263, TO-220, TO-252
GM7885	8.5V	TO-263, TO-220, TO-252
GM7809	9.0V	TO-263, TO-220, TO-252
GM7810	10V	TO-263, TO-220, TO-252
GM7812	12V	TO-263, TO-220, TO-252
GM7815	15V	TO-263, TO-220, TO-252
GM7818	18V	TO-263, TO-220, TO-252
GM7820	20V	TO-263, TO-220, TO-252
GM7824	24V	TO-263, TO-220, TO-252
GM7827	27V	TO-263, TO-220, TO-252

* For detail Ordering Number identification, please see last page.

◆ RECOMMENDED OPERATING CONDITIONS (I_O= 1.5A)

PARAMETER		MIN	MAX	UNIT
Input Voltage V_I	GM7805	7	25	V
	GM7806	8	25	
	GM7808	10.5	25	
	GM7885	10.5	25	
	GM7809	11.5	27	
	GM7810	12.5	28	
	GM7812	14.5	30	
	GM7815	17.5	30	
	GM7818	21	33	
	GM7820	23	36	
	GM7824	27	38	
	GM7827	30	40	
Output Current, I_O			1.5	A
Operating virtual junction temperature, T_J		0	125	°C

◆ ABSOLUTE MAXIMUM RATINGS

PARAMETER		VALUE	UNIT
Input Voltage	GM7824, GM7827	40	V
	All others	35	
Continuous Total Dissipation at 25°C free-air temperature		2	W
Continuous Total Dissipation at (or bellow) 25°C case Temperature		15	
Operating free-air, case, or virtual junctions Temperature Range		0 to +150	°C
Storage Temperature Range		-65 to +150	
Lead Temperature 1.6mm (1/16 inch) from case for 10seconds		260	

◆ SCHEMATIC BLOCK DIAGRAM

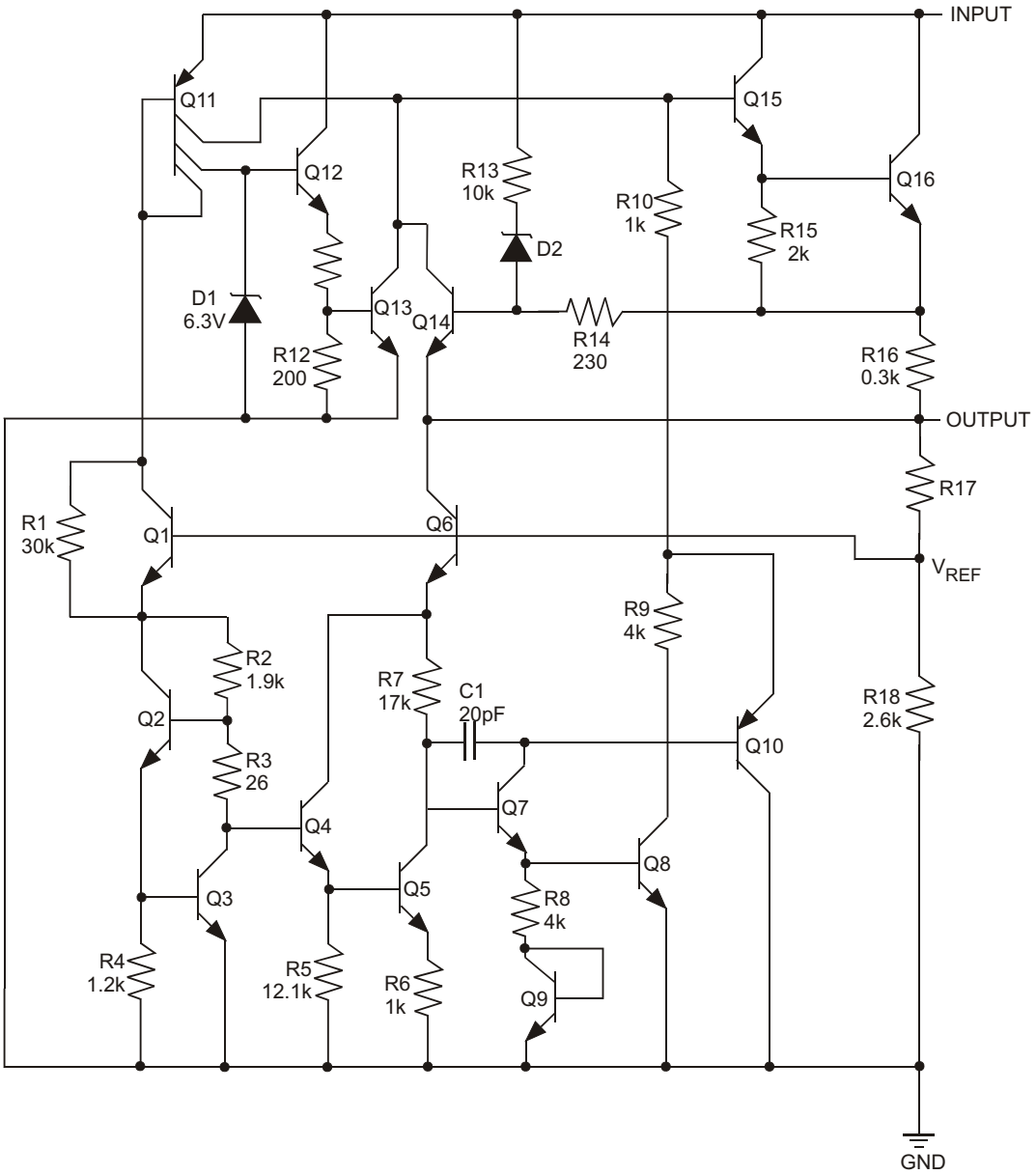

◆ ELECTRICAL CHARACTERISTICS at specified Junction Temperature

GM7805: V_I= 10V, I_O= 500mA, (unless otherwise noted)

CHARACTERISTICS	TEST CONDITIONS *		MIN	TYP	MAX	UNIT
Output Voltage **		25°C	4.8	5.0	5.2	V
	I_O= 5mA to 1A V_I=7V to 20V, P ≤ 15W	0°C to 125°C	4.75	5.0	5.25	
Input Regulation	V_I=7V to 25V	25°C		3	100	mV
	V_I=8V to 12V			1	50	
Ripple Rejection	V_I=8V to 18V, f = 120Hz	0°C to 125°C	62	78		dB
Output Regulation	I_O=5mA to 1.5A	25°C		15	100	mV
	I_O=250mA to 750mA			5	50	
Output Resistance	f = 1kHz	0°C to 125°C		0.017		
Temperature Coefficient Output Voltage	I_O= 5mA	0°C to 125°C		-1.1		mV/°C
Output Noise Voltage	f = 10Hz to 100kHz	25°C		40		μV
Dropout Voltage	I_O= 1A	25°C		2.0		V
Bias Current		25°C		4.2	8	mA
Bias Current Change	V_I= 7V to 25V	0°C to 125°C			1.3	mA
	I_O=5mA to 1A				0.5	
Short-Circuit Output Current		25°C		750		mA
Peak Output Current		25°C		2.2		A

GM7806: V_I= 11V, I_O= 500mA, (unless otherwise noted)

CHARACTERISTICS	TEST CONDITIONS *		MIN	TYP	MAX	UNIT
Output Voltage **		25°C	5.75	6	6.25	V
	I_O= 5mA to 1A V_I=8V to 21V, P ≤ 15W	0°C to 125°C	5.7	6	6.3	
Input Regulation	V_I=8V to 25V	25°C		5	120	mV
	V_I=9V to 13V			1.5	60	
Ripple Rejection	V_I=9V to 19V, f = 120Hz	0°C to 125°C	59	75		dB
Output Regulation	I_O=5mA to 1.5A	25°C		14	120	mV
	I_O=250mA to 750mA			4	60	
Output Resistance	f = 1kHz	0°C to 125°C		0.019		
Temperature Coefficient Output Voltage	I_O= 5mA	0°C to 125°C		-0.8		mV/°C
Output Noise Voltage	f = 10Hz to 100kHz	25°C		45		μV
Dropout Voltage	I_O= 1A	25°C		2.0		V
Bias Current		25°C		4.3	8	mA
Bias Current Change	V_I= 8V to 25V	0°C to 125°C			1.3	mA
	I_O=5mA to 1A				0.5	
Short-Circuit Output Current		25°C		550		mA
Peak Output Current		25°C		2.2		A

*Pulse testing tehniques are used to maintain the junction temperature as close to the ambient temperature as possible. Thermal effects must be taken into account.
** The specification applies only for DC power dissipation permitted by absolute maximum ratings

◆ ELECTRICAL CHARACTERISTICS at specified Junction Temperature

GM7808: V_I=14V, I_O=500mA, (unless otherwise noted)

CHARACTERISTICS	TEST CONDITIONS *		MIN	TYP	MAX	UNIT
Output Voltage **		25°C	7.7	8	8.3	V
	I_O= 5mA to 1A V_I=10.5V to 23V, P≤ 15W	0°C to 125°C	7.6	8	8.4	
Input Regulation	V_I=10.5V to 25V	25°C		6	160	mV
	V_I=11V to 17V			2	80	
Ripple Rejection	V_I=11.5V to 21.5V, f = 120Hz	0°C to 125°C	55	72		dB
Output Regulation	I_O=5mA to 1.5A	25°C		12	160	mV
	I_O=250mA to 750mA			4	80	
Output Resistance	f = 1kHz	0°C to 125°C		0.016		
Temperature Coefficient Output Voltage	I_O= 5mA	0°C to 125°C		-0.8		mV/°C
Output Noise Voltage	f = 10Hz to 100kHz	25°C		52		μV
Dropout Voltage	I_O= 1A	25°C		2.0		V
Bias Current		25°C		4.3	8	mA
Bias Current Change	V_I= 10.5V to 25V	0°C to 125°C			1.0	mA
	I_O=5mA to 1A				0.5	
Short-Circuit Output Current		25°C		450		mA
Peak Output Current		25°C		2.2		A

GM7885: V_I=15V, I_O=500mA, (unless otherwise noted)

CHARACTERISTICS	TEST CONDITIONS *		MIN	TYP	MAX	UNIT
Output Voltage **		25°C	8.15	8.5	8.85	V
	I_O= 5mA to 1A V_I=11.5V to 23.5V, P≤ 15W	0°C to 125°C	8.1	8.5	8.9	
Input Regulation	V_I=10.5V to 25V	25°C		6	170	mV
	V_I=11V to 17V			2	85	
Ripple Rejection	V_I=11.5V to 21.5V, f = 120Hz	0°C to 125°C	54	70		dB
Output Regulation	I_O=5mA to 1.5A	25°C		12	170	mV
	I_O=250mA to 750mA			4	85	
Output Resistance	f = 1kHz	0°C to 125°C		0.016		
Temperature Coefficient Output Voltage	I_O= 5mA	0°C to 125°C		-0.8		mV/°C
Output Noise Voltage	f = 10Hz to 100kHz	25°C		55		μV
Dropout Voltage	I_O= 1A	25°C		2.0		V
Bias Current		25°C		4.3	8	mA
Bias Current Change	V_I= 10.5V to 25V	0°C to 125°C			1.0	mA
	I_O=5mA to 1A				0.5	
Short-Circuit Output Current		25°C		450		mA
Peak Output Current		25°C		2.2		A

*Pulse testing tehniques are used to maintain the junction temperature as close to the ambient temperature as possible. Thermal effects must be taken into account.
** The specification applies only for DC power dissipation permitted by absolute maximum ratings

◆ ELECTRICAL CHARACTERISTICS at specified Junction Temperature

GM7809: V_I=16V, I_O=500mA, (unless otherwise noted)

CHARACTERISTICS	TEST CONDITIONS *		MIN	TYP	MAX	UNIT
Output Voltage **		25°C	8.65	9	9.35	V
	I_O= 5mA to 1A V_I=11.5V to 24V, P ≤ 15W	0°C to 125°C	8.55	9	9.45	
Input Regulation	V_I=11.5V to 27V	25°C		7	180	mV
	V_I=13V to 19V			2	90	
Ripple Rejection	V_I=12V to 22V, f = 120Hz	0°C to 125°C	55	70		dB
Output Regulation	I_O=5mA to 1.5A	25°C		12	180	mV
	I_O=250mA to 750mA			4	90	
Output Resistance	f = 1kHz	0°C to 125°C		0.018		
Temperature Coefficient Output Voltage	I_O= 5mA	0°C to 125°C		-1.0		mV/°C
Output Noise Voltage	f = 10Hz to 100kHz	25°C		60		μV
Dropout Voltage	I_O= 1A	25°C		2.0		V
Bias Current		25°C		4.3	8	mA
Bias Current Change	V_I= 11.5V to 27V	0°C to 125°C			1.0	mA
	I_O=5mA to 1A				0.5	
Short-Circuit Output Current		25°C		400		mA
Peak Output Current		25°C		2.2		A

GM7810: V_I= 17V, I_O= 500mA, (unless otherwise noted)

CHARACTERISTICS	TEST CONDITIONS *		MIN	TYP	MAX	UNIT
Output Voltage **		25°C	9.6	10	10.4	V
	I_O= 5mA to 1A V_I=12.5V to 25V, P ≤ 15W	0°C to 125°C	9.5	10	10.5	
Input Regulation	V_I=12.5V to 28V	25°C		7	200	mV
	V_I=14V to 20V			2	100	
Ripple Rejection	V_I=13V to 23V, f = 120Hz	0°C to 125°C	55	71		dB
Output Regulation	I_O=5mA to 1.5A	25°C		12	200	mV
	I_O=250mA to 750mA			4	100	
Output Resistance	f = 1kHz	0°C to 125°C		0.018		
Temperature Coefficient Output Voltage	I_O= 5mA	0°C to 125°C		-1.0		mV/°C
Output Noise Voltage	f = 10Hz to 100kHz	25°C		70		μV
Dropout Voltage	I_O= 1A	25°C		2.0		V
Bias Current		25°C		4.3	8	mA
Bias Current Change	V_I= 12.5V to 28V	0°C to 125°C			1.0	mA
	I_O=5mA to 1A				0.5	
Short-Circuit Output Current		25°C		400		mA
Peak Output Current		25°C		2.2		A

*Pulse testing tehniques are used to maintain the junction temperature as close to the ambient temperature as possible.
Thermal effects must be taken into account.
** The specification applies only for DC power dissipation permitted by absolute maximum ratings

◆ ELECTRICAL CHARACTERISTICS at specified Junction Temperature

GM7812: V_I=19V, I_O=500mA, (unless otherwise noted)

CHARACTERISTICS	TEST CONDITIONS *		MIN	TYP	MAX	UNIT
Output Voltage **		25°C	11.5	12	12.5	V
	I_O= 5mA to 1A V_I=14.5V to 27V, P≤ 15W	0°C to 125°C	11.4	12	12.6	
Input Regulation	V_I=14.5V to 30V	25°C		10	240	mV
	V_I=16V to 22V			3	120	
Ripple Rejection	V_I=15V to 25V, f = 120Hz	0°C to 125°C	55	71		dB
Output Regulation	I_O=5mA to 1.5A	25°C		12	240	mV
	I_O=250mA to 750mA			4	120	
Output Resistance	f = 1kHz	0°C to 125°C		0.018		
Temperature Coefficient Output Voltage	I_O= 5mA	0°C to 125°C		-1.0		mV/°C
Output Noise Voltage	f = 10Hz to 100kHz	25°C		75		μV
Dropout Voltage	I_O= 1A	25°C		2.0		V
Bias Current		25°C		4.3	8	mA
Bias Current Change	V_I= 14.5V to 30V	0°C to 125°C			1.0	mA
	I_O=5mA to 1A				0.5	
Short-Circuit Output Current		25°C		350		mA
Peak Output Current		25°C		2.2		A

GM7815: V_I=23V, I_O=500mA, (unless otherwise noted)

CHARACTERISTICS	TEST CONDITIONS *		MIN	TYP	MAX	UNIT
Output Voltage **		25°C	14.4	15	15.6	V
	I_O= 5mA to 1A V_I=17.5V to 30V, P≤ 15W	0°C to 125°C	14.25	15	15.75	
Input Regulation	V_I=17.5V to 30V	25°C		12	300	mV
	V_I=20V to 26V			3	150	
Ripple Rejection	V_I=18.5V to 28.5V, f = 120Hz	0°C to 125°C	54	70		dB
Output Regulation	I_O=5mA to 1.5A	25°C		12	300	mV
	I_O=250mA to 750mA			4	150	
Output Resistance	f = 1kHz	0°C to 125°C		0.019		
Temperature Coefficient Output Voltage	I_O= 5mA	0°C to 125°C		-1.0		mV/°C
Output Noise Voltage	f = 10Hz to 100kHz	25°C		90		μV
Dropout Voltage	I_O= 1A	25°C		2.0		V
Bias Current		25°C		4.3	8	mA
Bias Current Change	V_I= 17.5V to 30V	0°C to 125°C			1.0	mA
	I_O=5mA to 1A				0.5	
Short-Circuit Output Current		25°C		230		mA
Peak Output Current		25°C		2.1		A

*Pulse testing tehniques are used to maintain the junction temperature as close to the ambient temperature as possible. Thermal effects must be taken into account.
** The specification applies only for DC power dissipation permitted by absolute maximum ratings

◆ ELECTRICAL CHARACTERISTICS at specified Junction Temperature

GM7818: V_I=27V, I_O=500mA, (unless otherwise noted)

CHARACTERISTICS	TEST CONDITIONS *		MIN	TYP	MAX	UNIT
Output Voltage **		25°C	17.3	18	18.7	V
	I_O= 5mA to 1A V_I=21V to 33V, P≤ 15W	0°C to 125°C	17.1	18	18.9	
Input Regulation	V_I=21V to 33V	25°C		15	360	mV
	V_I=24V to 30V			5	180	
Ripple Rejection	V_I=22V to 32V, f = 120Hz	0°C to 125°C	53	69		dB
Output Regulation	I_O=5mA to 1.5A	25°C		12	360	mV
	I_O=250mA to 750mA			4	180	
Output Resistance	f = 1kHz	0°C to 125°C		0.022		
Temperature Coefficient Output Voltage	I_O= 5mA	0°C to 125°C		-1.0		mV/°C
Output Noise Voltage	f = 10Hz to 100kHz	25°C		110		μV
Dropout Voltage	I_O= 1A	25°C		2.0		V
Bias Current		25°C		4.5	8	mA
Bias Current Change	V_I= 21V to 33V	0°C to 125°C			1.0	mA
	I_O=5mA to 1A				0.5	
Short-Circuit Output Current		25°C		200		mA
Peak Output Current		25°C		2.1		A

GM7820: V_I=29V, I_O=500mA, (unless otherwise noted)

CHARACTERISTICS	TEST CONDITIONS *		MIN	TYP	MAX	UNIT
Output Voltage **		25°C	19.2	20	20.8	V
	I_O= 5mA to 1A V_I=23V to 35V, P≤ 15W	0°C to 125°C	19	20	21	
Input Regulation	V_I=23V to 35V	25°C		18	400	mV
	V_I=26V to 32V			7	200	
Ripple Rejection	V_I=24V to 34V, f = 120Hz	0°C to 125°C	51	66		dB
Output Regulation	I_O=5mA to 1.5A	25°C		15	400	mV
	I_O=250mA to 750mA			7	200	
Output Resistance	f = 1kHz	0°C to 125°C		0.027		
Temperature Coefficient Output Voltage	I_O= 5mA	0°C to 125°C		-1.3		mV/°C
Output Noise Voltage	f = 10Hz to 100kHz	25°C		150		μV
Dropout Voltage	I_O= 1A	25°C		2.0		V
Bias Current		25°C		4.5	8	mA
Bias Current Change	V_I= 23V to 35V	0°C to 125°C			1.0	mA
	I_O=5mA to 1A				0.5	
Short-Circuit Output Current		25°C		180		mA
Peak Output Current		25°C		2.1		A

*Pulse testing tehniques are used to maintain the junction temperature as close to the ambient temperature as possible.
Thermal effects must be taken into account.
** The specification applies only for DC power dissipation permitted by absolute maximum ratings

◆ ELECTRICAL CHARACTERISTICS at specified Junction Temperature

GM7824: V_I=33V, I_O=500mA, (unless otherwise noted)

CHARACTERISTICS	TEST CONDITIONS *		MIN	TYP	MAX	UNIT
Output Voltage **		25°C	23	24	25	V
	I_O= 5mA to 1A V_I=27V to 38V, P≤ 15W	0°C to 125°C	22.8	24	25.2	
Input Regulation	V_I=27V to 38V	25°C		18	480	mV
	V_I=30V to 36V			6	240	
Ripple Rejection	V_I=28V to 32V, f = 120Hz	0°C to 125°C	50	66		dB
Output Regulation	I_O=5mA to 1.5A	25°C		12	480	mV
	I_O=250mA to 750mA			4	240	
Output Resistance	f = 1kHz	0°C to 125°C		0.028		
Temperature Coefficient Output Voltage	I_O= 5mA	0°C to 125°C		-1.5		mV/°C
Output Noise Voltage	f = 10Hz to 100kHz	25°C		170		μV
Dropout Voltage	I_O= 1A	25°C		2.0		V
Bias Current		25°C		4.6	8	mA
Bias Current Change	V_I= 27V to 38V	0°C to 125°C			1.0	mA
	I_O=5mA to 1A				0.5	
Short-Circuit Output Current		25°C		150		mA
Peak Output Current		25°C		2.1		A

GM7827: V_I=36V, I_O=500mA, (unless otherwise noted)

CHARACTERISTICS	TEST CONDITIONS *		MIN	TYP	MAX	UNIT
Output Voltage **		25°C	25.9	27	28.1	V
	I_O= 5mA to 1A V_I=30V to 40V, P≤ 15W	0°C to 125°C	25.7	27	28.3	
Input Regulation	V_I=30V to 40V	25°C		25	540	mV
	V_I=33V to 39V			10	270	
Ripple Rejection	V_I=30V to 40V, f = 120Hz	0°C to 125°C	50	64		dB
Output Regulation	I_O=5mA to 1.5A	25°C		20	540	mV
	I_O=250mA to 750mA			9	270	
Output Resistance	f = 1kHz	0°C to 125°C		0.030		
Temperature Coefficient Output Voltage	I_O= 5mA	0°C to 125°C		-1.6		mV/°C
Output Noise Voltage	f = 10Hz to 100kHz	25°C		200		μV
Dropout Voltage	I_O= 1A	25°C		2.0		V
Bias Current		25°C		4.8	8	mA
Bias Current Change	V_I= 30V to 40V	0°C to 125°C			1.0	mA
	I_O=5mA to 1A				0.5	
Short-Circuit Output Current		25°C		120		mA
Peak Output Current		25°C		2.1		A

*Pulse testing tehniques are used to maintain the junction temperature as close to the ambient temperature as possible.
Thermal effects must be taken into account.
** The specification applies only for DC power dissipation permitted by absolute maximum ratings

◆ TO-263-2 PACKAGE OUTLINE DIMENSIONS

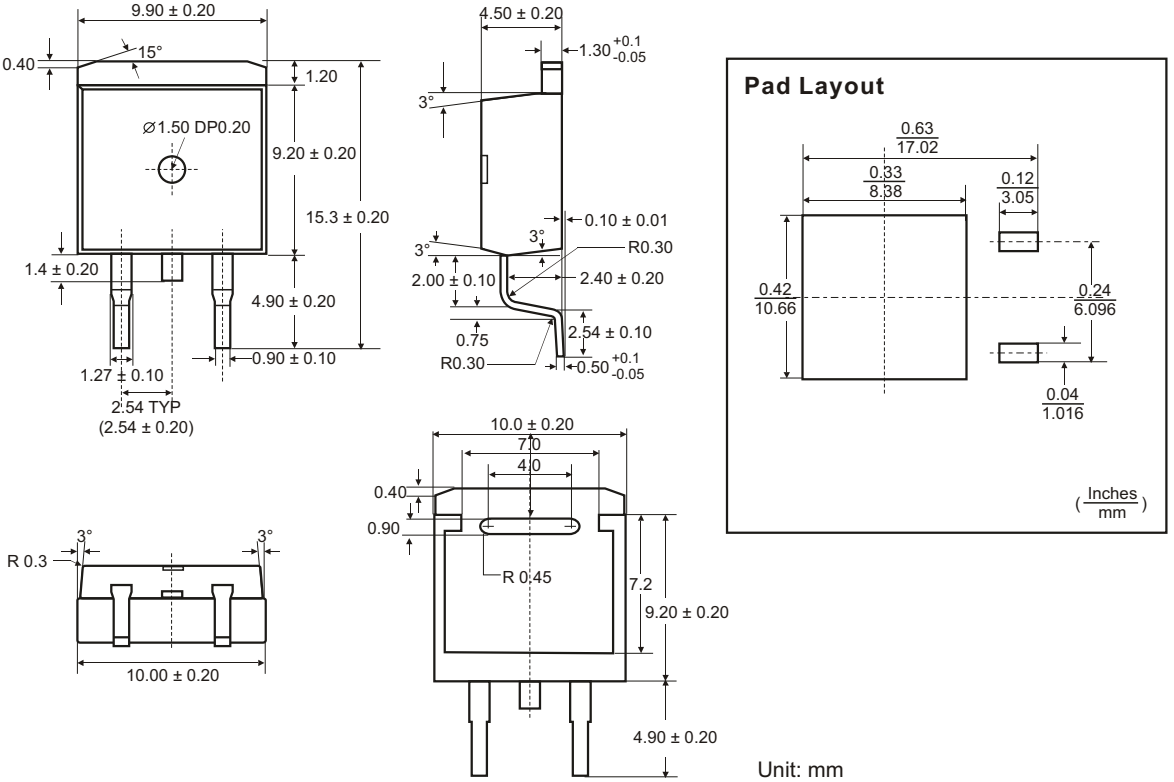

◆ TO-220 PACKAGE OUTLINE DIMENSIONS

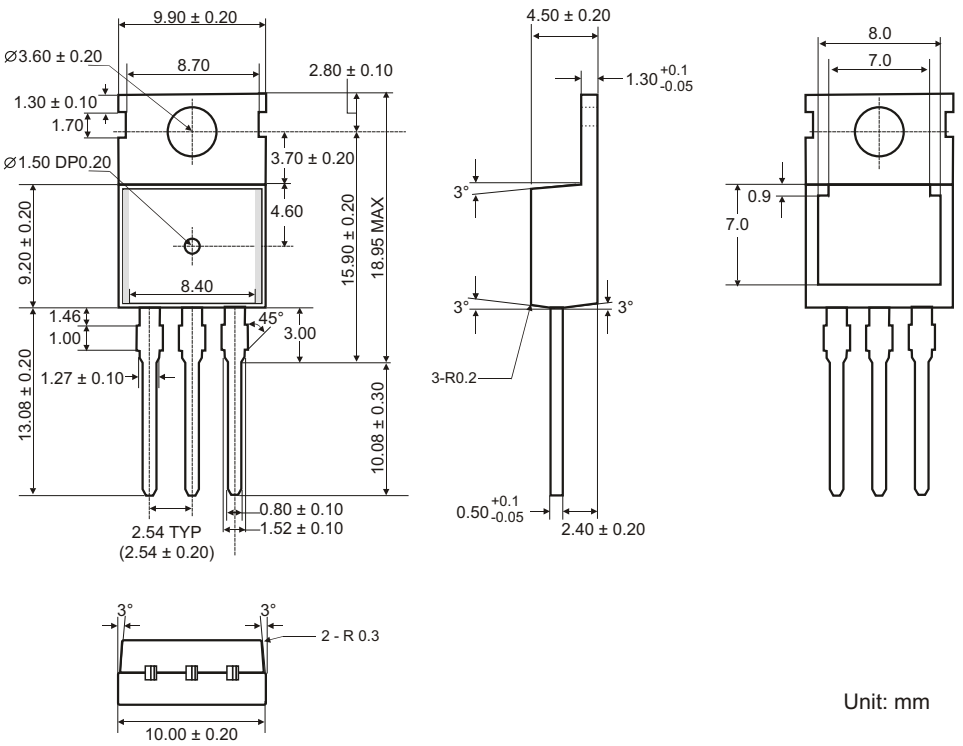

◆ TO-252 PACKAGE OUTLINE DIMENSIONS

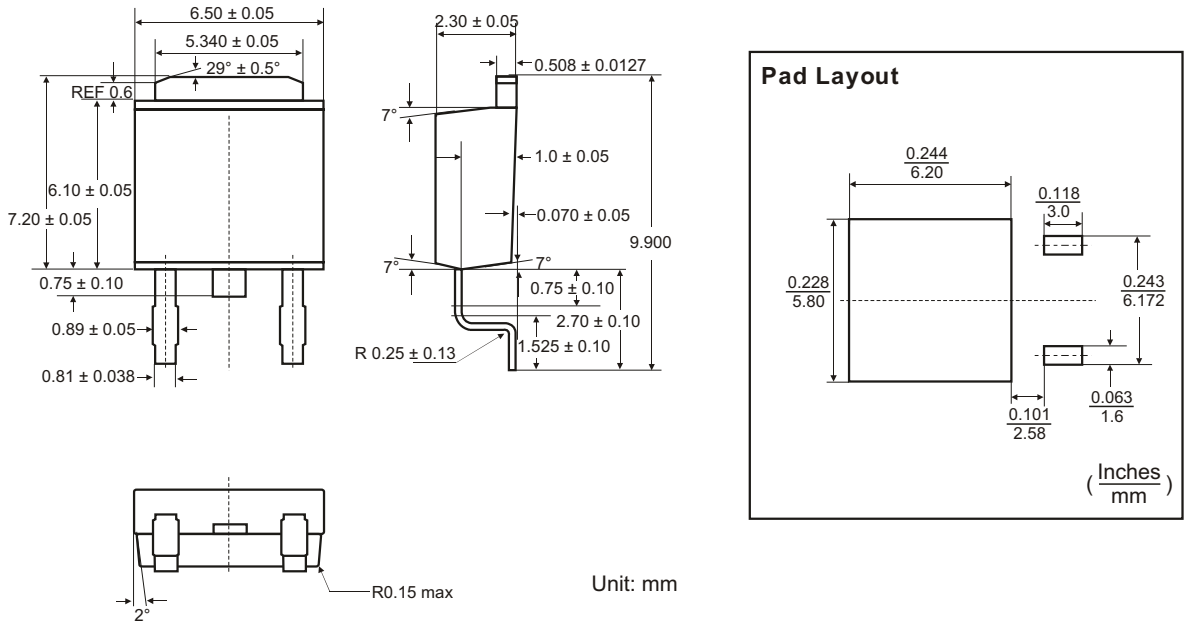

◆ ORDERING NUMBER

GM 78 00 TA3 T

Gamma Micro.

Circuit Type

Output Voltage
05: 5.0V, 06: 6.0V
08: 8.0V, 8.5:8.5V
09: 9.0V, 10:10V
12: 12V, 15: 15V
18: 18V, 20: 20V
24: 24V, 27: 27V

Shipping
R: Tape & Reel
T: Tube

Package
TA3: TO-263
50 Units/ Tube
800 Units/ Tape & Reel

TB3: TO-220
80 Units/ Tube

TC3: TO-252
80 Units/ Tube
2,500 Units/ Tape & Reel

GAMMA Micro, GAMMA and are registered trademarks of GAMMA MICROELECTRONICS INC. GAMMA reserves the right to make changes without further notice to any products herein.

Information provided herein is alleged to be exact and consistent and this publication surpasses and replaces all information previously supplied.

GAMMA makes no warranty the suitability of its products for any particular purpose, nor does GAMMA assume any liability arising out of the application or use of any product or circuit, and specifically disclaims any and all liability including without limitation special, consequential or incidental damages.

GAMMA products are not authorized for using as critical components in life support devices or systems without prior written approval from GAMMA MICROELECTRONICS INC.

НИОКР СИСТЕМС

ООО «НИОКРсистемс» - это оперативные поставки широкого спектра электронных компонентов отечественного и импортного производства напрямую от производителей и с крупнейших мировых складов. Реализуемая нашей компанией продукция насчитывает более полумиллиона наименований.

Благодаря этому наша компания предлагает к поставке практически не ограниченный ассортимент компонентов как оптовыми, мелкооптовыми партиями, так и в розницу.

Благодаря развитой сети поставщиков, помогаем в поиске и приобретении экзотичных или снятых с производства компонентов.

Наша компания это:

- Гарантия качества поставляемой продукции
- Широкий ассортимент
- Минимальные сроки поставок
- Техническая поддержка
- Подбор комплектации
- Индивидуальный подход
- Гибкое ценообразование
- Работаем по 275 ФЗ

ООО «НИОКР СИТЕМС»
Москва, 125362, Россия, ул. Вишневая, д. 9, к. 1, Блок 104 а и 104 в

Телефон: 8 (495) 268-14-82
Email: n@nsistems.ru

ИНН: 7735154786
ОГРН: 1167746717709