- **Very Low Power Consumption**
  **1 mW Typ at $V_{DD}$ = 5 V**
- **Capable of Operation in Astable Mode**
- **CMOS Output Capable of Swinging Rail to Rail**
- **High Output-Current Capability**
  **Sink 100 mA Typ**
  **Source 10 mA Typ**
- **Output Fully Compatible With CMOS, TTL, and MOS**
- **Low Supply Current Reduces Spikes During Output Transitions**
- **Single-Supply Operation From 1 V to 15 V**
- **Functionally Interchangeable With the NE555; Has Same Pinout**
- **ESD Protection Exceeds 2000 V Per MIL-STD-883C, Method 3015.2**

**D, DB, P, OR PW PACKAGE**
**(TOP VIEW)**

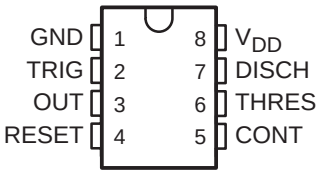


## functional block diagram

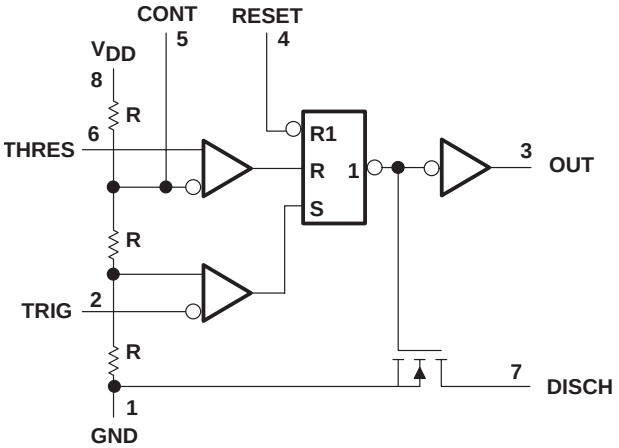


RESET can override TRIG, which can override THRES.

## description

The TLC551 is a monolithic timing circuit fabricated using the TI LinCMOS™ process. The timer is fully compatible with CMOS, TTL, and MOS logic and operates at frequencies up to 2 MHz. Compared to the NE555 timer, this device uses smaller timing capacitors because of its high input impedance. As a result, more accurate time delays and oscillations are possible. Power consumption is low across the full range of power supply voltage.

Like the NE555, the TLC551 has a trigger level equal to approximately one-third of the supply voltage and a threshold level equal to approximately two-thirds of the supply voltage. These levels can be altered by use of the control voltage terminal (CONT). When the trigger input (TRIG) falls below the trigger level, the flip-flop is set and the output goes high. If TRIG is above the trigger level and the threshold input (THRES) is above the threshold level, the flip-flop is reset and the output is low. The reset input (RESET) can override all other inputs and can be used to initiate a new timing cycle. If RESET is low, the flip-flop is reset and the output is low. Whenever the output is low, a low-impedance path is provided between DISCH and GND. All unused inputs should be tied to an appropriate logic level to prevent false triggering.

While the CMOS output is capable of sinking over 100 mA and sourcing over 10 mA, the TLC551 exhibits greatly reduced supply-current spikes during output transitions. This minimizes the need for the large decoupling capacitors required by the NE555.

The TLC551C is characterized for operation from 0°C to 70°C.

This device contains circuits to protect its inputs and outputs against damage due to high static voltages or electrostatic fields. These circuits have been qualified to protect this device against electrostatic discharges (ESD) of up to 2 kV according to MIL-STD-883C, Method 3015; however, it is advised that precautions be taken to avoid application of any voltage higher than maximum-rated voltages to these high-impedance circuits. During storage or handling, the device leads should be shorted together or the device should be placed in conductive foam. In a circuit, unused inputs should always be connected to an appropriated logic voltage level, preferably either supply voltage or ground. Specific guidelines for handling devices of this type are contained in the publication *Guidelines for Handling Electrostatic-Discharge-Sensitive (ESDS) Devices and Assemblies* available from Texas Instruments.

LinCMOS is a trademark of Texas Instruments Incorporated.

**PRODUCTION DATA information is current as of publication date. Products conform to specifications per the terms of Texas Instruments standard warranty. Production processing does not necessarily include testing of all parameters.**

Copyright © 1997, Texas Instruments Incorporated

**AVAILABLE OPTIONS**

| PACKAGED DEVICES | | | | | | CHIP FORM (Y) |
|---|---|---|---|---|---|---|
| $T_A$ | $V_{DD}$ RANGE | SMALL OUTLINE (D) | SSOP (DB) | PLASTIC DIP (P) | TSSOP (PW) | |
| 0°C to 70°C | 1 V to 16 V | TLC551CD | TLC551CDBLE | TLC551CP | TLC551CPWLE | TLC551Y |

The D package is available taped and reeled. Add the suffix R (e.g., TLC551CDR). The DB and PW packages are only available left-end taped and reeled (indicated by the LE suffix on the device type; e.g., TLC551CDBLE). Chips are tested at 25°C.

**FUNCTION TABLE**

| RESET VOLTAGE † | TRIGGER VOLTAGE † | THRESHOLD VOLTAGE † | OUTPUT | DISCHARGE SWITCH |
|---|---|---|---|---|
| <MIN | Irrelevant | Irrelevant | Low | On |
| >MAX | <MIN | Irrelevant | High | Off |
| >MAX | >MAX | >MAX | Low | On |
| >MAX | >MAX | <MIN | As previously established | |

† For conditions shown as MIN or MAX, use the appropriate value specified under electrical characteristics.

## TLC551Y chip information

This chip, when properly assembled, displays characteristics similar to the TLC551. Thermal compression or ultrasonic bonding may be used on the doped aluminum bonding pads. Chips may be mounted with conductive epoxy or a gold-silicon preform.

**BONDING PAD ASSIGNMENTS**

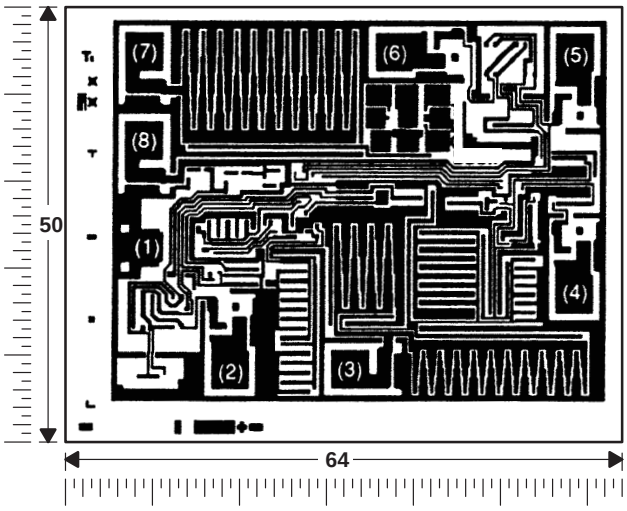


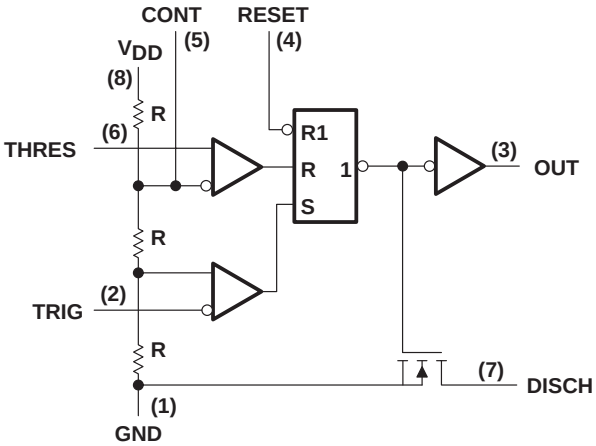


RESET can override TRIG, which can override THRES.

**CHIP THICKNESS: 15 TYPICAL**

**BONDING PADS: 4 × 4 MINIMUM**

**$T_J$max = 150°C**

**TOLERANCES ARE ±10%.**

**ALL DIMENSIONS ARE IN MILS.**

**PIN (1) IS INTERNALLY CONNECTED TO BACKSIDE OF CHIP.**

## equivalent schematic

| COMPONENT COUNT | |
|---|---|
| Transistors | 39 |
| Resistors | 5 |

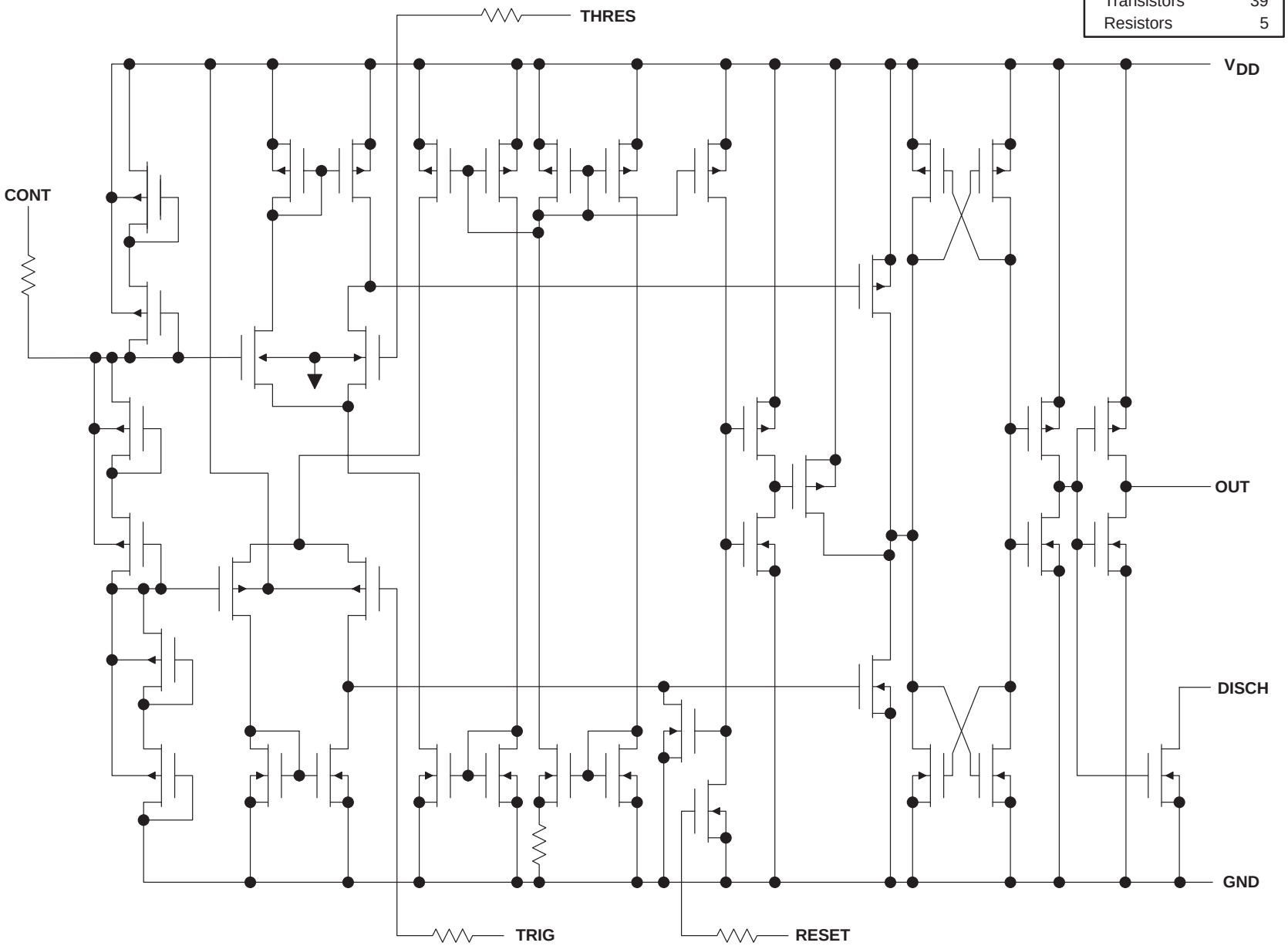

## absolute maximum ratings over operating free-air temperature range (unless otherwise noted)†

Supply voltage, $V_{DD}$ (see Note 1) . . . . . 18 V
Input voltage range, $V_I$ (any input) . . . . . –0.3 to $V_{DD}$
Sink current, discharge or output . . . . . 150 mA
Source current, output, $I_O$ . . . . . 15 mA
Continuous total power dissipation . . . . . See Dissipation Rating Table
Operating free-air temperature range . . . . . 0°C to 70°C
Storage temperature range . . . . . –65°C to 150°C
Lead temperature 1,6 mm (1/16 inch) from case for 10 seconds . . . . . 260°C

† Stresses beyond those listed under "absolute maximum ratings" may cause permanent damage to the device. These are stress ratings only, and functional operation of the device at these or any other conditions beyond those indicated under "recommended operating conditions" is not implied. Exposure to absolute-maximum-rated conditions for extended periods may affect device reliability.

NOTE 1: All voltage values are with respect to network GND.

**DISSIPATION RATING TABLE**

| PACKAGE | $T_A \leq 25°C$ POWER RATING | DERATING FACTOR ABOVE $T_A = 25°C$ | $T_A = 70°C$ POWER RATING |
|---|---|---|---|
| D | 725 mW | 5.8 mW/°C | 464 mW |
| DB | 525 mW | 4.2 mW/°C | 336 mW |
| P | 1000 mW | 8.0 mW/°C | 640 mW |
| PW | 525 mW | 4.2 mW/°C | 336 mW |

## recommended operating conditions

| | MIN | MAX | UNIT |
|---|---|---|---|
| Supply voltage, $V_{DD}$ | 1 | 15 | V |
| Operating free-air temperature range, $T_A$ | 0 | 70 | °C |

## electrical characteristics at specified free-air temperature, $V_{DD}$ = 1 V

| PARAMETER | | TEST CONDITIONS | $T_A$† | MIN | TYP | MAX | UNIT |
|---|---|---|---|---|---|---|---|
| $V_{IT}$ | Threshold voltage | | 25°C | 0.475 | 0.67 | 0.85 | V |
| | | | Full range | 0.45 | | 0.875 | |
| $I_{IT}$ | Threshold current | | 25°C | | 10 | | pA |
| | | | 70°C | | 75 | | |
| $V_{I(TRIG)}$ | Trigger voltage | | 25°C | 0.15 | 0.33 | 0.425 | V |
| | | | Full range | 0.1 | | 0.45 | |
| $I_{I(TRIG)}$ | Trigger current | | 25°C | | 10 | | pA |
| | | | 70°C | | 75 | | |
| $V_{I(RESET)}$ | Reset voltage | | 25°C | 0.4 | 0.7 | 1 | V |
| | | | Full range | 0.3 | | 1 | |
| $I_{I(RESET)}$ | Reset current | | 25°C | | 10 | | pA |
| | | | 70°C | | 75 | | |
| | Control voltage (open circuit) as a percentage of supply voltage | | 70°C | | 66.7% | | |
| | Discharge switch on-stage voltage | $I_{OL}$ = 100 µA | 25°C | | 0.02 | 0.15 | V |
| | | | Full range | | | 0.2 | |
| | Discharge switch off-stage voltage | | 25°C | | 0.1 | | nA |
| | | | 70°C | | 0.5 | | |
| $V_{OH}$ | High-level output voltage | $I_{OH}$ = –10 µA | 25°C | 0.6 | 0.98 | | V |
| | | | Full range | 0.6 | | | |
| $V_{OL}$ | Low-level output voltage | $I_{OL}$ = 100 µA | 25°C | | 0.03 | 0.2 | V |
| | | | Full range | | | 0.25 | |
| $I_{DD}$ | Supply current | See Note 2 | 25°C | | 15 | 100 | µA |
| | | | Full range | | | 150 | |

† Full range is 0°C to 70°C.

NOTE 2: These values apply for the expected operating configurations in which THRES is connected directly to DISCH or to TRIG.

## electrical characteristics at specified free-air temperature, $V_{DD}$ = 2 V

| PARAMETER | | TEST CONDITIONS | $T_A$† | MIN | TYP | MAX | UNIT |
|---|---|---|---|---|---|---|---|
| $V_{IT}$ | Threshold voltage | | 25°C | 0.95 | 1.33 | 1.65 | V |
| | | | Full range | 0.85 | | 1.75 | |
| $I_{IT}$ | Threshold current | | 25°C | | 10 | | pA |
| | | | 70°C | | 75 | | |
| $V_{I(TRIG)}$ | Trigger voltage | | 25°C | 0.4 | 0.67 | 0.95 | V |
| | | | Full range | 0.3 | | 1.05 | |
| $I_{I(TRIG)}$ | Trigger current | | 25°C | | 10 | | pA |
| | | | 70°C | | 75 | | |
| $V_{I(RESET)}$ | Reset voltage | | 25°C | 0.4 | 1.1 | 1.5 | V |
| | | | Full range | 0.3 | | 1.8 | |
| $I_{I(RESET)}$ | Reset current | | 25°C | | 10 | | pA |
| | | | 70°C | | 75 | | |
| | Control voltage (open circuit) as a percentage of supply voltage | | 70°C | | 66.7% | | |
| | Discharge switch on-stage voltage | $I_{OL}$ = 1 mA | 25°C | | 0.03 | 0.2 | V |
| | | | Full range | | | 0.25 | |
| | Discharge switch off-stage voltage | | 25°C | | 0.1 | | nA |
| | | | 70°C | | 0.5 | | |
| $V_{OH}$ | High-level output voltage | $I_{OH}$ = –300 µA | 25°C | 1.5 | 1.9 | | V |
| | | | Full range | 1.5 | | | |
| $V_{OL}$ | Low-level output voltage | $I_{OL}$ = 1 mA | 25°C | | 0.07 | 0.3 | V |
| | | | Full range | | | 0.35 | |
| $I_{DD}$ | Supply current | See Note 2 | 25°C | | 65 | 250 | µA |
| | | | Full range | | | 400 | |

† Full range is 0°C to 70°C.

NOTE 2: These values apply for the expected operating configurations in which THRES is connected directly to DISCH or to TRIG.

## electrical characteristics at specified free-air temperature, $V_{DD}$ = 5 V

| PARAMETER | | TEST CONDITIONS | $T_A$† | MIN | TYP | MAX | UNIT |
|---|---|---|---|---|---|---|---|
| $V_{IT}$ | Threshold voltage | | 25°C | 2.8 | 3.3 | 3.8 | V |
| | | | Full range | 2.7 | | 3.9 | |
| $I_{IT}$ | Threshold current | | 25°C | | 10 | | pA |
| | | | 70°C | | 75 | | |
| $V_{I(TRIG)}$ | Trigger voltage | | 25°C | 1.36 | 1.66 | 1.96 | V |
| | | | Full range | 1.26 | | 2.06 | |
| $I_{I(TRIG)}$ | Trigger current | | 25°C | | 10 | | pA |
| | | | 70°C | | 75 | | |
| $V_{I(RESET)}$ | Reset voltage | | 25°C | 0.4 | 1.1 | 1.5 | V |
| | | | Full range | 0.3 | | 1.8 | |
| $I_{I(RESET)}$ | Reset current | | 25°C | | 10 | | pA |
| | | | 70°C | | 75 | | |
| | Control voltage (open circuit) as a percentage of supply voltage | | 70°C | | 66.7% | | |
| | Discharge switch on-stage voltage | $I_{OL}$ = 10 mA | 25°C | | 0.14 | 0.5 | V |
| | | | Full range | | | 0.6 | |
| | Discharge switch off-stage voltage | | 25°C | | 0.1 | | nA |
| | | | 70°C | | 0.5 | | |
| $V_{OH}$ | High-level output voltage | $I_{OH}$ = –1 mA | 25°C | 4.1 | 4.8 | | V |
| | | | Full range | 4.1 | | | |
| $V_{OL}$ | Low-level output voltage | $I_{OL}$ = 8 mA | 25°C | | 0.21 | 0.4 | V |
| | | | Full range | | | 0.5 | |
| | | $I_{OL}$ = 5 mA | 25°C | | 0.13 | 0.3 | |
| | | | Full range | | | 0.4 | |
| | | $I_{OL}$ = 3.2 mA | 25°C | | 0.08 | 0.3 | |
| | | | Full range | | | 0.35 | |
| $I_{DD}$ | Supply current | See Note 2 | 25°C | | 170 | 350 | µA |
| | | | Full range | | | 500 | |

† Full range is 0°C to 70°C.

NOTE 2: These values apply for the expected operating configurations in which THRES is connected directly to DISCH or to TRIG.

## electrical characteristics at specified free-air temperature, $V_{DD}$ = 15 V

| PARAMETER | | TEST CONDITIONS | $T_A$† | MIN | TYP | MAX | UNIT |
|---|---|---|---|---|---|---|---|
| $V_{IT}$ | Threshold voltage | | 25°C | 9.45 | | 10.55 | V |
| | | | Full range | 9.35 | | 10.65 | |
| $I_{IT}$ | Threshold current | | 25°C | | 10 | | pA |
| | | | 70°C | | 75 | | |
| $V_{I(TRIG)}$ | Trigger voltage | | 25°C | 4.65 | 5 | 5.35 | V |
| | | | Full range | 4.55 | | 5.45 | |
| $I_{I(TRIG)}$ | Trigger current | | 25°C | | 10 | | pA |
| | | | 70°C | | 75 | | |
| $V_{I(RESET)}$ | Reset voltage | | 25°C | 0.4 | 1.1 | 1.5 | V |
| | | | Full range | 0.3 | | 1.8 | |
| $I_{I(RESET)}$ | Reset current | | 25°C | | 10 | | pA |
| | | | 70°C | | 75 | | |
| | Control voltage (open circuit) as a percentage of supply voltage | | 70°C | | 66.7% | | |
| | Discharge switch on-stage voltage | $I_{OL}$ = 100 mA | 25°C | | 0.77 | 1.7 | V |
| | | | Full range | | | 1.8 | |
| | Discharge switch off-stage voltage | | 25°C | | 0.1 | | nA |
| | | | 70°C | | 0.5 | | |
| $V_{OH}$ | High-level output voltage | $I_{OH}$ = –10 mA | 25°C | 12.5 | 14.2 | | V |
| | | | Full range | 12.5 | | | |
| | | $I_{OH}$ = –5 mA | 25°C | 13.5 | 14.6 | | |
| | | | Full range | 13.5 | | | |
| | | $I_{OH}$ = –1 mA | 25°C | 14.2 | 14.9 | | |
| | | | Full range | 14.2 | | | |
| $V_{OL}$ | Low-level output voltage | $I_{OL}$ = 100 mA | 25°C | | 1.28 | 3.2 | V |
| | | | Full range | | | 3.6 | |
| | | $I_{OL}$ = 50 mA | 25°C | | 0.63 | 1 | |
| | | | Full range | | | 1.3 | |
| | | $I_{OL}$ = 10 mA | 25°C | | 0.12 | 0.3 | |
| | | | Full range | | | 0.4 | |
| $I_{DD}$ | Supply current | See Note 2 | 25°C | | 360 | 600 | µA |
| | | | Full range | | | 800 | |

† Full range is 0°C to 70°C.

NOTE 2: These values apply for the expected operating configurations in which THRES is connected directly to DISCH or to TRIG.

## operating characteristics, $V_{DD}$ = 5 V, $T_A$ = 25°C (unless otherwise noted)

| PARAMETER | | TEST CONDITIONS | | MIN | TYP | MAX | UNIT |
|---|---|---|---|---|---|---|---|
| | Initial error of timing interval‡ | $V_{DD}$ = 5 V to 15 V, $C_T$ = 0.1 µF, | $R_A$ = $R_B$ = 1 kΩ to 100 kΩ, See Note 3 | | 1% | 3% | |
| | Supply voltage sensitivity of timing interval | | | | 0.1 | 0.5 | %/V |
| $t_r$ | Rise time, output pulse | $R_L$ = 10 MΩ, | $C_L$ = 10 pF | | 20 | 75 | ns |
| $t_f$ | Fall time, output pulse | | | | 15 | 60 | |
| $f_{max}$ | Maximum frequency in astable mode | $R_A$ = 470 Ω, $C_T$ = 200 pF | $R_B$ = 200 Ω, See Note 3 | 1.2 | 1.8 | | MHz |

‡ Timing interval error is defined as the difference between the measured value and the average value of a random sample from each process run.

NOTE 3: $R_A$, $R_B$, and $C_T$ are as defined in Figure 3.

## electrical characteristics at $V_{DD}$ = 5 V, $T_A$ = 25°C

| PARAMETER | | TEST CONDITIONS | MIN | TYP | MAX | UNIT |
|---|---|---|---|---|---|---|
| $V_{IT}$ | Threshold voltage | | 2.8 | 3.3 | 3.8 | V |
| $I_{IT}$ | Threshold current | | | 10 | | pA |
| $V_{I(TRIG)}$ | Trigger voltage | | 1.36 | 1.66 | 1.96 | V |
| $I_{I(TRIG)}$ | Trigger current | | | 10 | | pA |
| $V_{I(RESET)}$ | Reset voltage | | 0.4 | 1.1 | 1.5 | V |
| $I_{I(RESET)}$ | Reset current | | | 10 | | pA |
| | Control voltage (open circuit) as a percentage of supply voltage | | | 66.7% | | |
| | Discharge switch on-state voltage | $I_{OL}$ = 10 mA | | 0.14 | 0.5 | V |
| | Discharge switch off-state current | | | 0.1 | | nA |
| $V_{OH}$ | High-level output voltage | $I_{OH}$ = – 1 mA | 4.1 | 4.8 | | V |
| $V_{OL}$ | Low-level output voltage | $I_{OL}$ = 8 mA | | 0.21 | 0.4 | V |
| | | $I_{OL}$ = 5 mA | | 0.13 | 0.3 | |
| | | $I_{OL}$ = 3.2 mA | | 0.08 | 0.3 | |
| $I_{DD}$ | Supply current | See Note 2 | | 170 | 350 | µA |

NOTE 2: These values apply for the expected operating configurations in which THRES is connected directly to DISCH or to TRIG.

## TYPICAL CHARACTERISTICS

**DISCHARGE SWITCH ON-STATE RESISTANCE vs FREE-AIR TEMPERATURE**

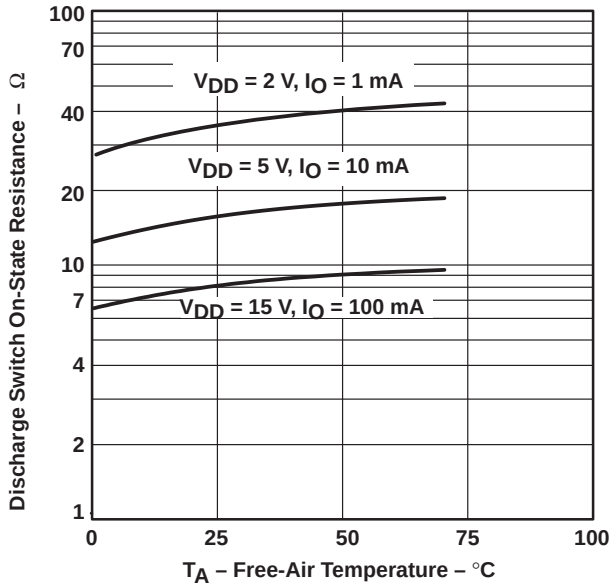


**Figure 1**

**PROPAGATION DELAY TIMES (TO DISCHARGE OUTPUT FROM TRIGGER AND THRESHOLD SHORTED TOGETHER) vs SUPPLY VOLTAGE**

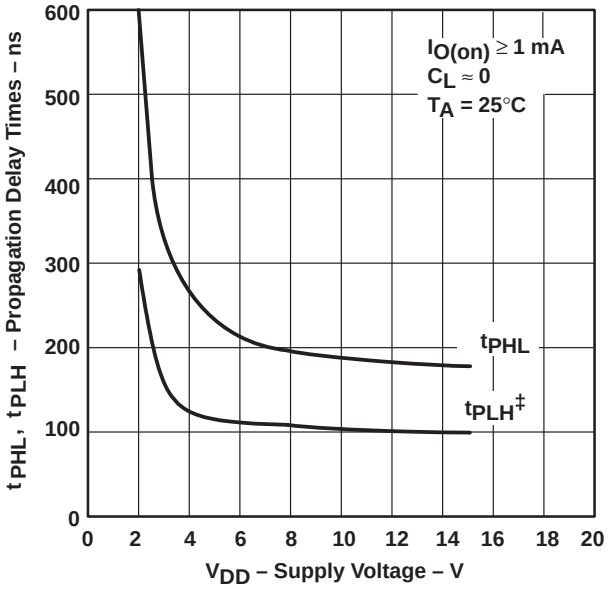


‡ The effects of the load resistance on these values must be taken into account separately.

**Figure 2**

## APPLICATION INFORMATION

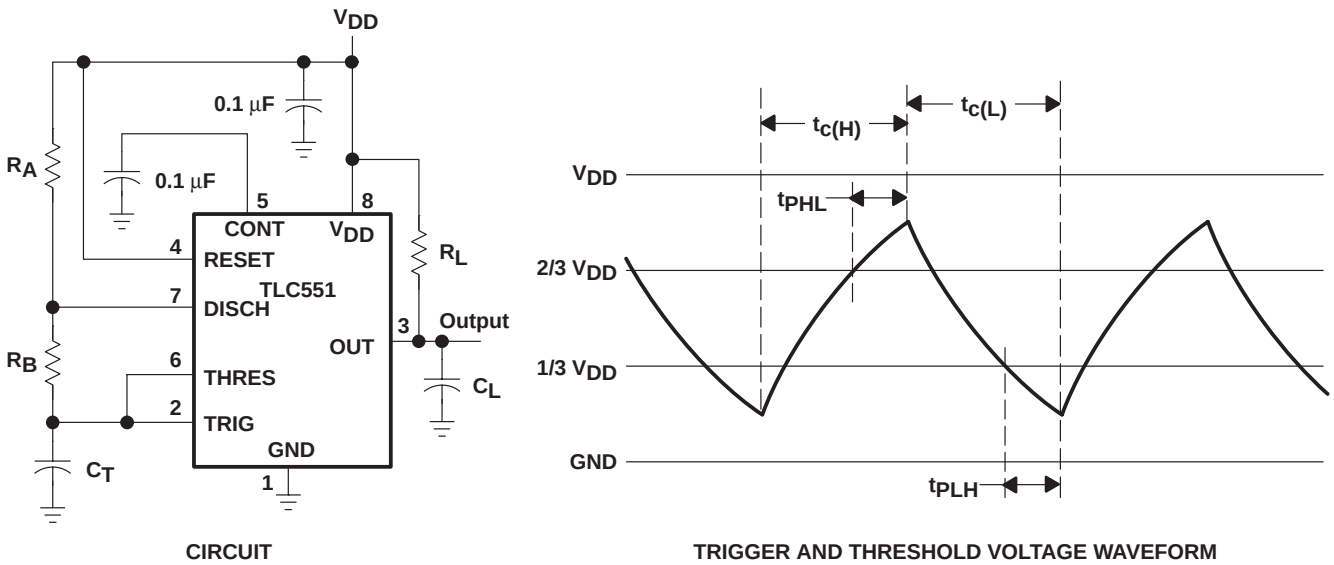


**Figure 3. Astable Operation**

Connecting TRIG to THRES, as shown in Figure 3, causes the timer to run as a multivibrator. The capacitor $C_T$ charges through $R_A$ and $R_B$ to the threshold voltage level (approximately 0.67 $V_{DD}$) and then discharges through $R_B$ only to the value of the trigger voltage level (approximately 0.33 $V_{DD}$). The output is high during the charging cycle ($t_{c(H)}$) and low during the discharge cycle ($t_{c(L)}$). The duty cycle is controlled by the values of $R_A$, and $R_B$, and $C_T$, as shown in the equations below.

$$t_{c(H)} \approx C_T\,(R_A + R_B)\ \ln 2 \quad (\ln 2 = 0.693)$$

$$t_{c(L)} \approx C_T\,R_B\ \ln 2$$

$$\text{Period} = t_{c(H)} + t_{c(L)} \approx C_T\,(R_A + 2R_B)\ \ln 2$$

$$\text{Output driver duty cycle} = \frac{t_{c(L)}}{t_{c(H)} + t_{c(L)}} \approx 1 - \frac{R_B}{R_A + 2R_B}$$

$$\text{Output waveform duty cycle} = \frac{t_{c(H)}}{t_{c(H)} + t_{c(L)}} \approx \frac{R_B}{R_A + 2R_B}$$

The 0.1-µF capacitor at CONT in Figure 3 decreases the period by about 10%.

The formulas shown above do not allow for any propagation delay times from TRIG and THRES to DISCH. These delay times add directly to the period and create differences between calculated and actual values that increase with frequency. In addition, the internal on-state resistance $r_{on}$ during discharge adds to $R_B$ to provide another source of timing error in the calculation when $R_B$ is very low or $r_{on}$ is very high.

## APPLICATION INFORMATION

The equations below provide better agreement with measured values.

$$t_{c(H)} = C_T (R_A + R_B) \ln\left[3 - \exp\left(\frac{-t_{PLH}}{C_T (R_B + r_{on})}\right)\right] + t_{PHL}$$

$$t_{c(L)} = C_T (R_B + r_{on}) \ln\left[3 - \exp\left(\frac{-t_{PHL}}{C_T (R_A + R_B)}\right)\right] + t_{PLH}$$

These equations and those given earlier are similar in that a time constant is multiplied by the logarithm of a number or function. The limit values of the logarithmic terms must be between In 2 at low frequencies and In 3 at extremely high frequencies. For a duty cycle close to 50%, an appropriate constant for the logarithmic terms can be substituted with good results. Duty cycles less than 50% $\frac{t_{c(H)}}{t_{c(H)} + t_{c(L)}}$ require that $\frac{t_{c(H)}}{t_{c(L)}} < 1$ and possibly $R_A \leq r_{on}$. These conditions can be difficult to obtain.

In monostable applications, the trip point of the trigger input can be set by a voltage applied to CONT. An input voltage between 10% and 80% of the supply voltage from a resistor divider with at least 500-µA bias provides good results.

## MECHANICAL INFORMATION

**D (R-PDSO-G**)** **PLASTIC SMALL-OUTLINE PACKAGE**

**14 PIN SHOWN**

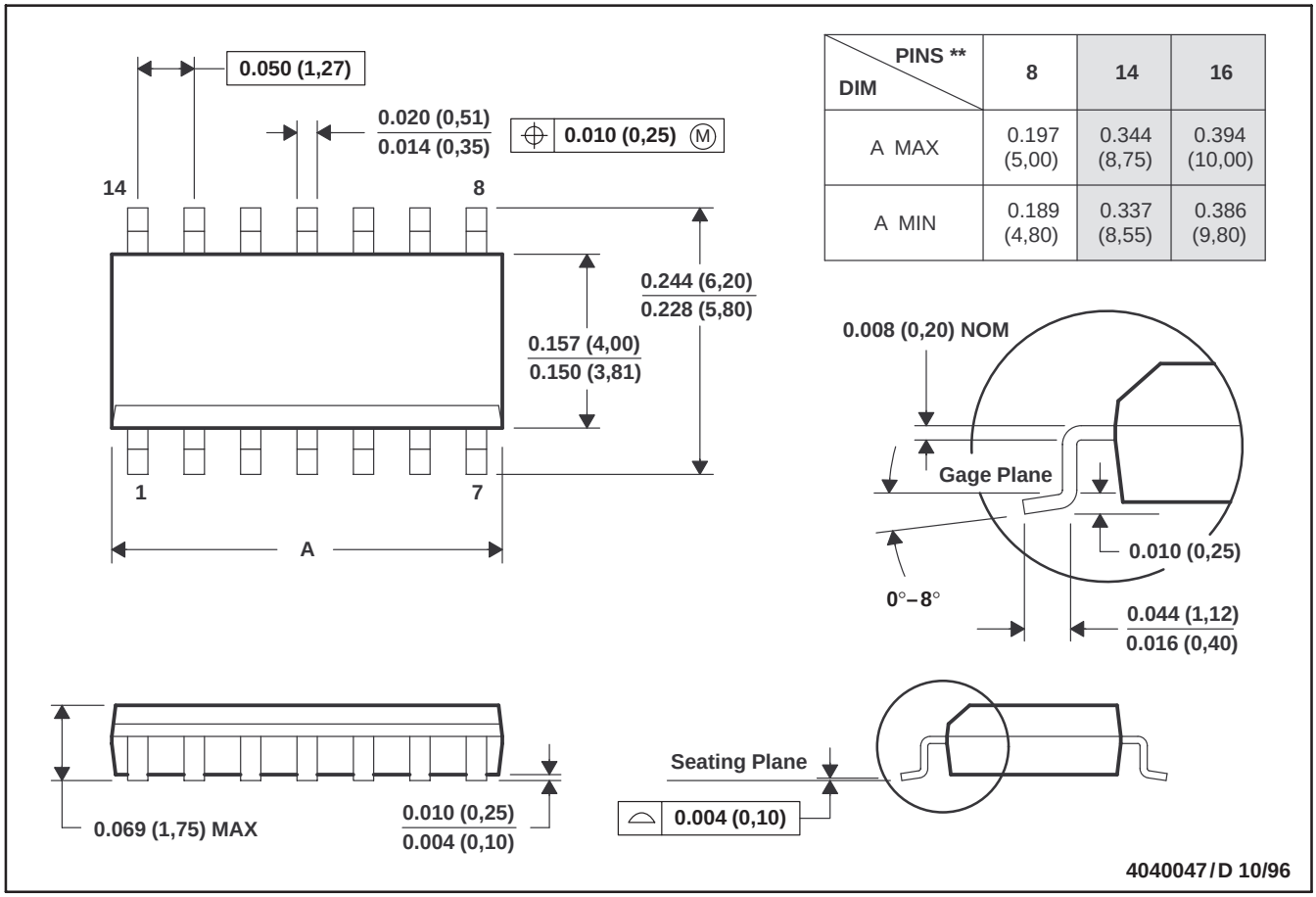


| DIM \ PINS ** | 8 | 14 | 16 |
|---|---|---|---|
| A MAX | 0.197 (5,00) | 0.344 (8,75) | 0.394 (10,00) |
| A MIN | 0.189 (4,80) | 0.337 (8,55) | 0.386 (9,80) |

NOTES: A. All linear dimensions are in inches (millimeters).
B. This drawing is subject to change without notice.
C. Body dimensions do not include mold flash or protrusion, not to exceed 0.006 (0,15).
D. Falls within JEDEC MS-012

## MECHANICAL INFORMATION

**DB (R-PDSO-G**)** **PLASTIC SMALL-OUTLINE PACKAGE**

**28 PIN SHOWN**

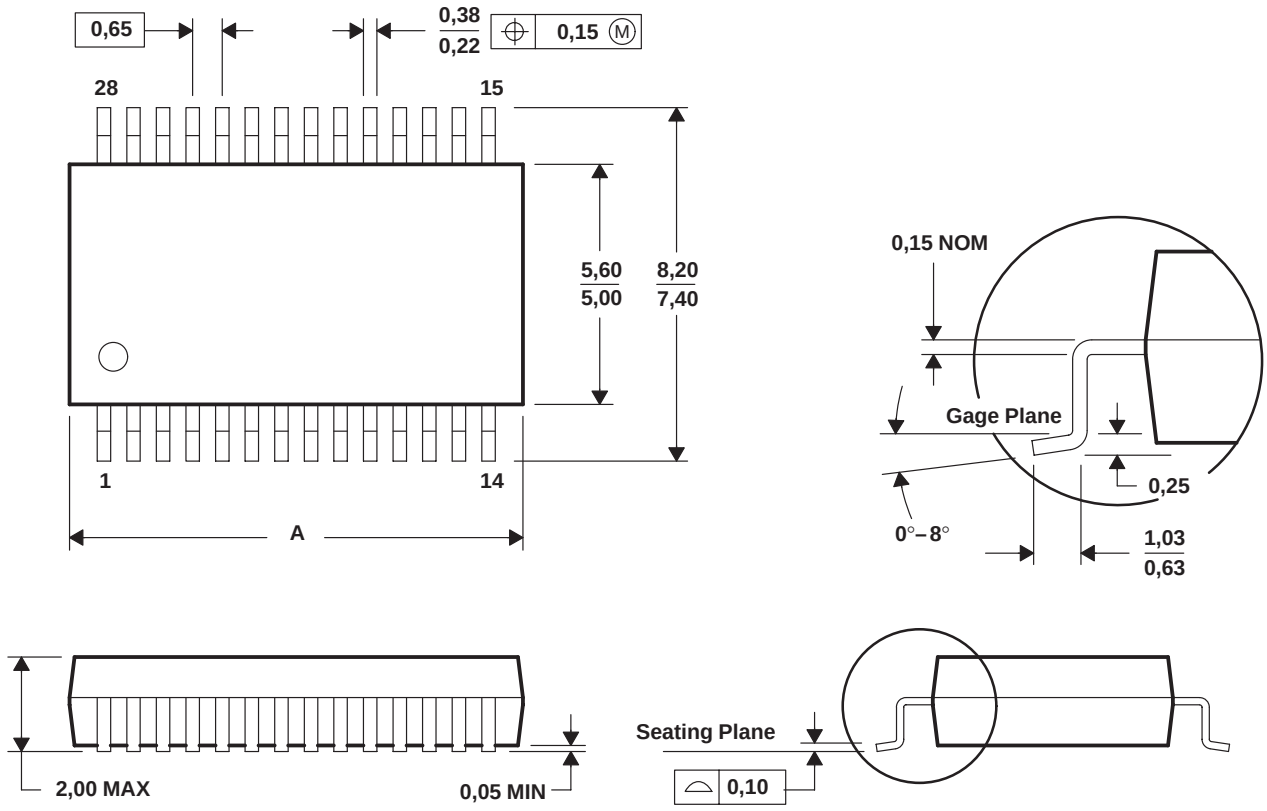


| DIM \ PINS ** | 8 | 14 | 16 | 20 | 24 | 28 | 30 | 38 |
|---|---|---|---|---|---|---|---|---|
| A MAX | 3,30 | 6,50 | 6,50 | 7,50 | 8,50 | 10,50 | 10,50 | 12,90 |
| A MIN | 2,70 | 5,90 | 5,90 | 6,90 | 7,90 | 9,90 | 9,90 | 12,30 |

**4040065 / C 10/95**

NOTES: A. All linear dimensions are in millimeters.
B. This drawing is subject to change without notice.
C. Body dimensions do not include mold flash or protrusion not to exceed 0,15.
D. Falls within JEDEC MO-150

## MECHANICAL INFORMATION

**P (R-PDIP-T8)** **PLASTIC DUAL-IN-LINE PACKAGE**

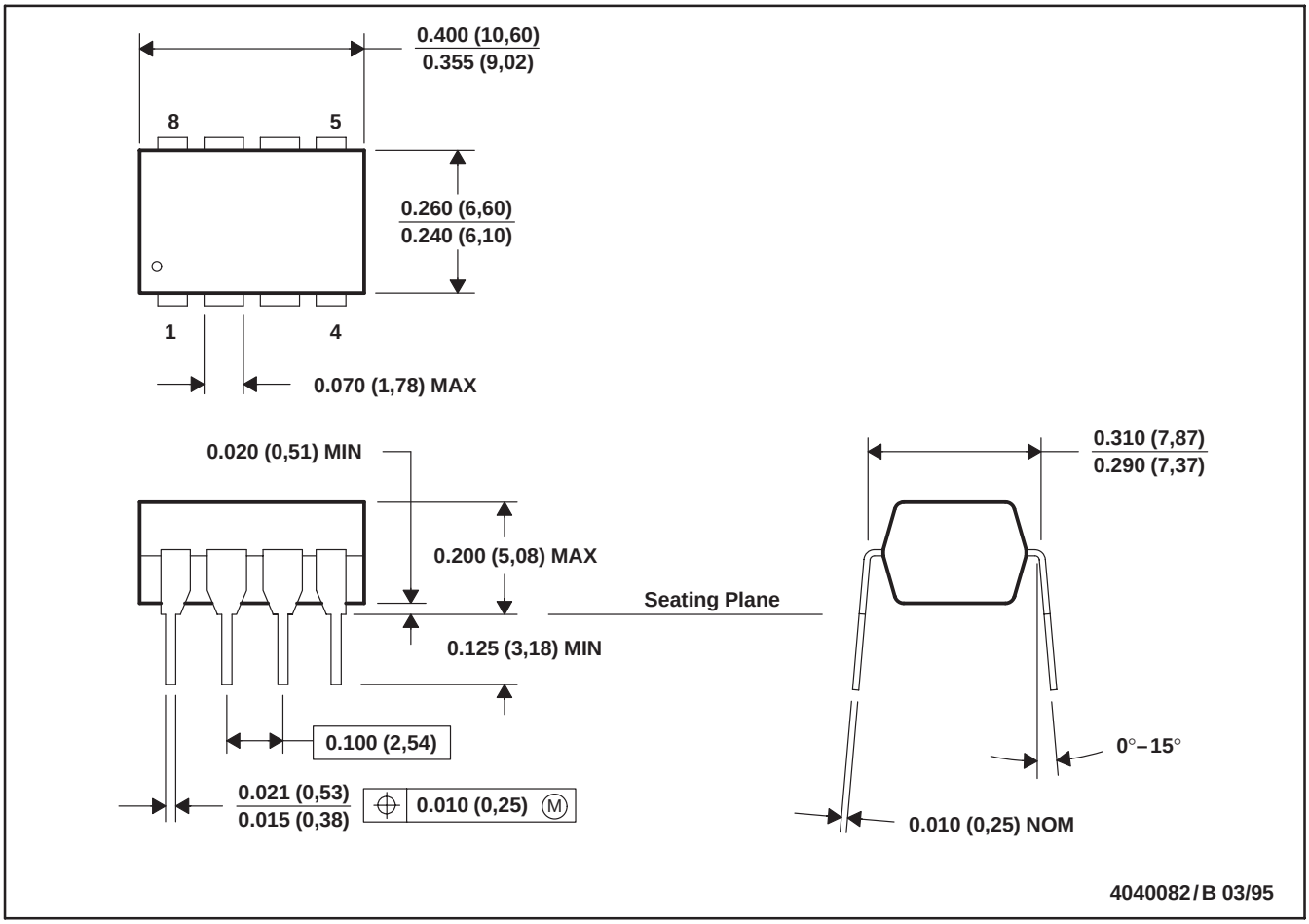


NOTES: A. All linear dimensions are in inches (millimeters).
B. This drawing is subject to change without notice.
C. Falls within JEDEC MS-001

## MECHANICAL INFORMATION

**PW (R-PDSO-G**)** **PLASTIC SMALL-OUTLINE PACKAGE**

**14 PIN SHOWN**

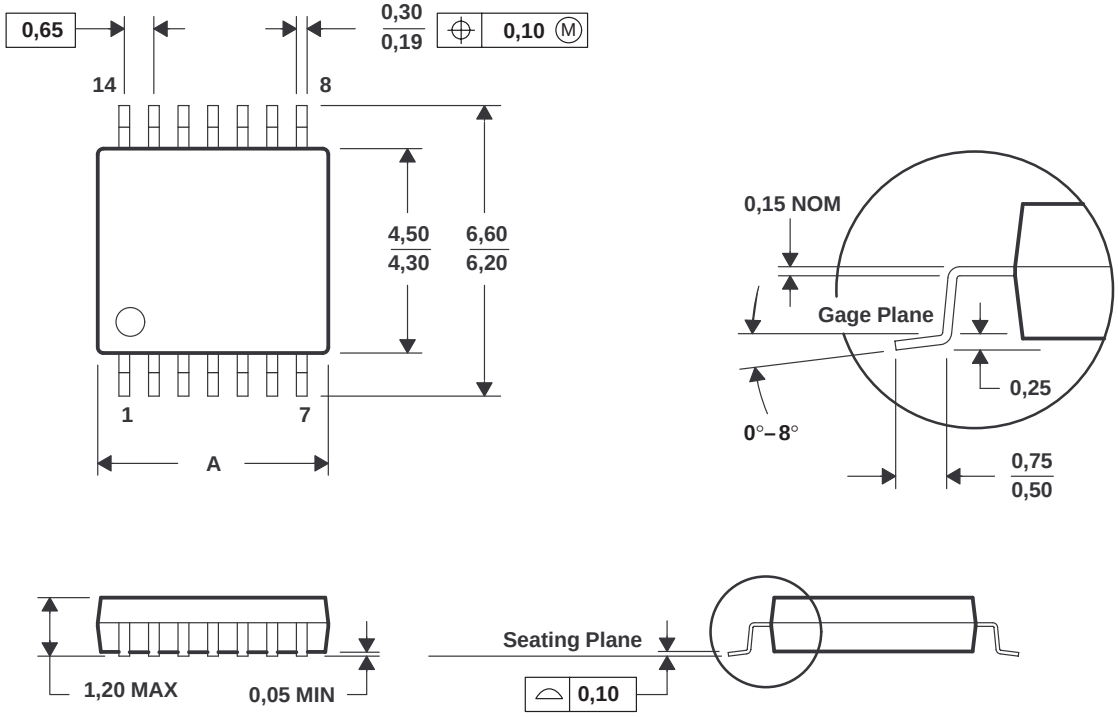


| DIM \ PINS ** | 8 | 14 | 16 | 20 | 24 | 28 |
|---|---|---|---|---|---|---|
| A MAX | 3,10 | 5,10 | 5,10 | 6,60 | 7,90 | 9,80 |
| A MIN | 2,90 | 4,90 | 4,90 | 6,40 | 7,70 | 9,60 |

**4040064/E 08/96**

NOTES: A. All linear dimensions are in millimeters.
B. This drawing is subject to change without notice.
C. Body dimensions do not include mold flash or protrusion not to exceed 0,15.
D. Falls within JEDEC MO-153

## IMPORTANT NOTICE

Texas Instruments and its subsidiaries (TI) reserve the right to make changes to their products or to discontinue any product or service without notice, and advise customers to obtain the latest version of relevant information to verify, before placing orders, that information being relied on is current and complete. All products are sold subject to the terms and conditions of sale supplied at the time of order acknowledgement, including those pertaining to warranty, patent infringement, and limitation of liability.

TI warrants performance of its semiconductor products to the specifications applicable at the time of sale in accordance with TI's standard warranty. Testing and other quality control techniques are utilized to the extent TI deems necessary to support this warranty. Specific testing of all parameters of each device is not necessarily performed, except those mandated by government requirements.

CERTAIN APPLICATIONS USING SEMICONDUCTOR PRODUCTS MAY INVOLVE POTENTIAL RISKS OF DEATH, PERSONAL INJURY, OR SEVERE PROPERTY OR ENVIRONMENTAL DAMAGE ("CRITICAL APPLICATIONS"). TI SEMICONDUCTOR PRODUCTS ARE NOT DESIGNED, AUTHORIZED, OR WARRANTED TO BE SUITABLE FOR USE IN LIFE-SUPPORT DEVICES OR SYSTEMS OR OTHER CRITICAL APPLICATIONS. INCLUSION OF TI PRODUCTS IN SUCH APPLICATIONS IS UNDERSTOOD TO BE FULLY AT THE CUSTOMER'S RISK.

In order to minimize risks associated with the customer's applications, adequate design and operating safeguards must be provided by the customer to minimize inherent or procedural hazards.

TI assumes no liability for applications assistance or customer product design. TI does not warrant or represent that any license, either express or implied, is granted under any patent right, copyright, mask work right, or other intellectual property right of TI covering or relating to any combination, machine, or process in which such semiconductor products or services might be or are used. TI's publication of information regarding any third party's products or services does not constitute TI's approval, warranty or endorsement thereof.

Copyright © 1998, Texas Instruments Incorporated

НИОКР СИСТЕМС

**ООО «НИОКРсистемс» -** это оперативные поставки широкого спектра электронных компонентов отечественного и импортного производства напрямую от производителей и с крупнейших мировых складов. Реализуемая нашей компанией продукция насчитывает более полумиллиона наименований.

Благодаря этому наша компания предлагает к поставке практически не ограниченный ассортимент компонентов как оптовыми, мелкооптовыми партиями, так и в розницу.

Благодаря развитой сети поставщиков, помогаем в поиске и приобретении экзотичных или снятых с производства компонентов.

## Наша компания это:

- Гарантия качества поставляемой продукции
- Широкий ассортимент
- Минимальные сроки поставок
- Техническая поддержка
- Подбор комплектации
- Индивидуальный подход
- Гибкое ценообразование
- Работаем по 275 ФЗ

ООО «НИОКР СИТЕМС»
Москва, 125362, Россия, ул. Вишневая, д. 9, к. 1, Блок 104 а и 104 в

Телефон: 8 (495) 268-14-82
Email: n@nsistems.ru

ИНН: 7735154786
ОГРН: 1167746717709