FAIRCHILD SEMICONDUCTOR®

January 2006

FAN1655
3A DDR Bus Termination Regulator

Description

The FAN1655 is a low-cost bi-directional LDO specifically designed for terminating DDR memory bus. It can both sink and source up to 2.1A continuous, 3A peak, providing enough current for most DDR applications. Load regulation meets the JEDEC spec, VTT = VREFOUT ± 40mV.

The FAN1655 includes a buffered reference voltage capable of supplying up to 5mA current. On-chip thermal limiting provides protection against a combination of power overload and ambient temperature that would create an excessive junction temperature. A shutdown input puts the FAN1655 into a low power mode.

The FAN1655 regulator is available in a power-enhanced eTSSOP™-16, standard SOIC-14, and an 8-Lead MLP package.

Features

- Sinks and sources 2.1A continuous, 3A peak
- 0 to +125°C operating temperature range
- 5mA Buffered VREFOUT = VDDQ/2
- Load regulation: VTT = VREFOUT ± 40mV
- On-chip thermal limiting
- Low Cost SO-14, Power-Enhanced eTSSOP or 8-pin 5x6mm MLP packages
- Low-Current Shutdown Mode
- Output Short Circuit Protection

Applications

- DDR Terminator VTT supply

Ordering Information

Part Number	Temperature Range	Package	Packing
FAN1655M	0°C to 125°C	SOIC-14	Rails
FAN1655MX	0°C to 125°C	SOIC-14	Tape and Reel
FAN1655MTF	0°C to 125°C	eTSSOP-16	Rails
FAN1655MTFX	0°C to 125°C	eTSSOP-16	Tape and Reel
FAN1655MPX	0°C to 125°C	MLP-8	Tape and Reel

Block Diagram

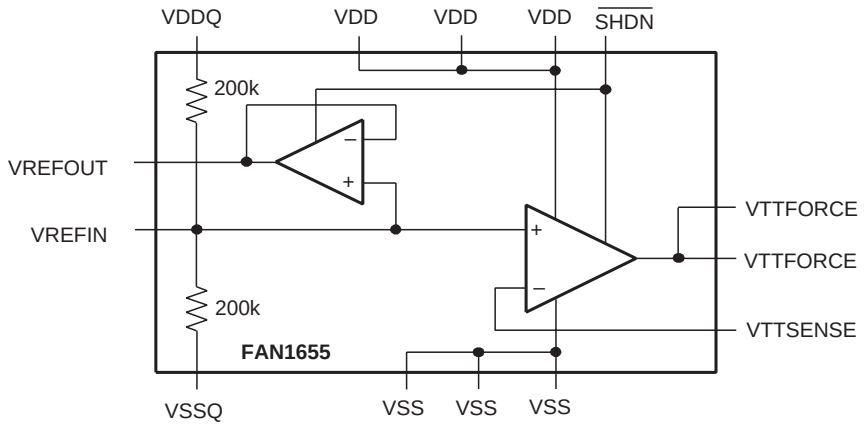

Pin Assignments

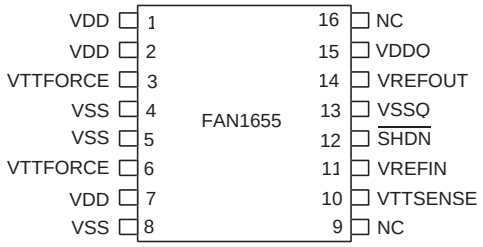

16-Lead Plastic eTSSOP-16
θ_{JC} = 4˚C/W*

*Thermal impedance is measured with the power pad soldered to a 0.5 square inch copper area. The copper area should be connected to Vss (ground) and positioned over an internal power or ground plane to assist in heat dissipation.

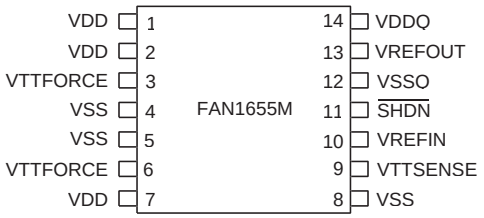

14-Lead Plastic SOIC
θ_{JC} = 37˚C/W, θ_{JA} = 88˚C/W

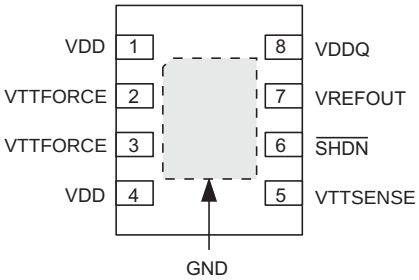

8-Lead MLP Package (5x6mm)
θ_{JC} = 4˚C/W, θ_{JA} = 34˚C/W
as measured on FAN1655MP Eval Board

Pin Definitions

Pin			Pin Name	Pin Function
MLP	eTSSOP	SOIC-14		
1, 4	1, 2, 7	1, 2, 7	VDD	Input power for the LDO.
2, 3	3, 6	3, 6	VTTFORCE	The VTT output voltage.
PAD	4, 5, 8	4, 5, 8	VSS	IC Ground.
5	10	9	VTTSENSE	Feedback for remote sense of the VTT voltage.
	11	10	VREFIN	Alternative input for direct control of VTTOUT and VREFOUT.
6	12	11	$\overline{\text{SHDN}}$	Shutdown. This active low shutdown turns off both VTT and VREFOUT. This pin has an internal pull-down, and must be externally driven high for the IC to be on.
	13	12	VSSQ	Signal Ground.
7	14	13	VREFOUT	Buffered Voltage Reference Output.
8	15	14	VDDQ	VDDQ Input. Attach this pin to the VDDQ supply to generate VTT and VREFOUT.
	9, 16		NC	No Internal Connection
PAD	PAD			Connect PAD to Vss Ground Plane

Typical Application

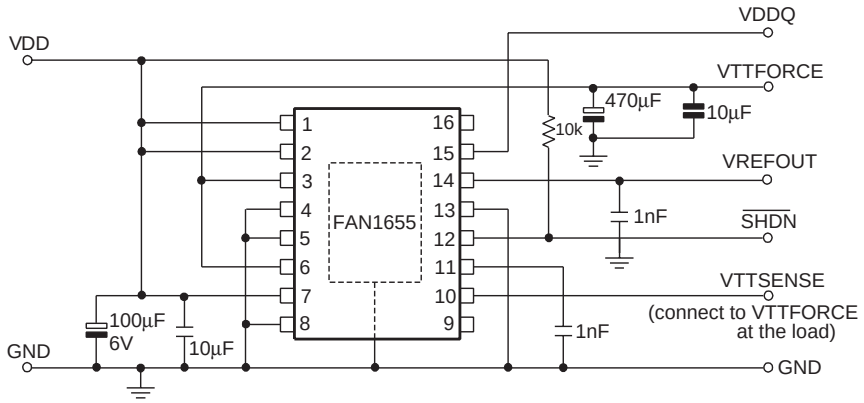

Figure 1. (eTSSOP pinout shown)

Typical Performance Characteristics

Quiescent Current vs. Temperature

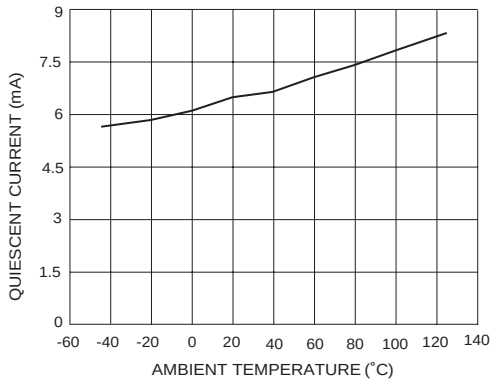

Figure 2. Quiescent Current vs. Ambient Temperature

VREF Output Change vs. IREF

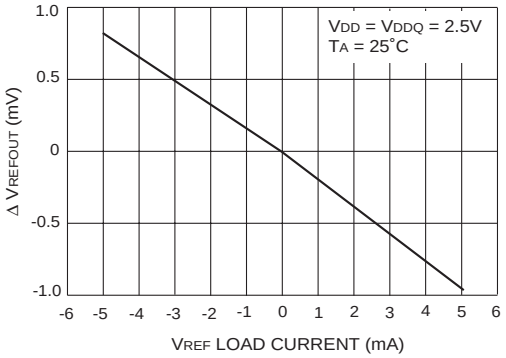

Figure 3. Reference Output Load Regulation

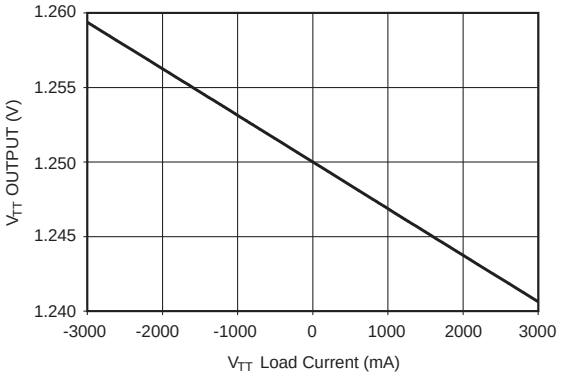

Figure 4. V_{TT} Load Regulation

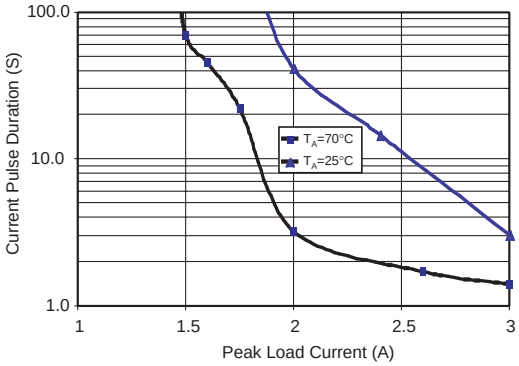

Figure 5. Maximum Non-Repetitive Output Current vs. Pulse Width (FAN1655M SO-14 Package)

Absolute Maximum Ratings

Supply Voltage VDD, VDDQ		6V
Junction Temperature, T_J		150˚C
Storage Temperature		-65 to 150˚C
Lead Soldering Temperature, 10 seconds		300˚C
Power Dissipation, P_D	FAN1655M (SOIC-14)	1.4W
	FAN1655MTF (e-TSSOP) FAN1655MP (MLP)	See “Power Dissipation and Derating”

Recommended Operating Conditions

Parameter	Conditions	Min.	Typ.	Max.	Units
Supply Voltage VDD		2.3	2.5	3.6	V
Supply Voltage VDDQ		2.2	2.5	3.0	V
Ambient Operating Temperature		0		125	˚C
VREFIN		1.1	1.25	1.5	V

Electrical Characteristics

(VDD = VDDQ = 2.5V ± 0.2V, and T_A = 25˚C using circuit in Figure 1, unless otherwise noted.)
The • denotes specifications which apply over the specified operating temperature range.

Parameter	Conditions		Min.	Typ.	Max.	Units
VTT Output Voltage	I_{OUT} = 0A, VREFIN = open					
	VDDQ = 2.3V	•	1.135	1.150	1.165	V
	VDDQ = 2.5V	•	1.235	1.250	1.265	V
	VDDQ = 2.7V	•	1.335	1.350	1.365	V
	I_{OUT} = ±2.1A, VREFIN = open					
	VDDQ = 2.3V		1.110	1.150	1.190	V
	VDDQ = 2.5V		1.210	1.250	1.290	V
	VDDQ = 2.7V		1.310	1.350	1.390	V
VTT Output Slew Rate	Cload = 10µF			0.3		V/µS
VTT Leakage Current	$\overline{SHDN}$ = 0V	•	-50		50	µA
VTT Current Limit			±3.1			A
VREFIN Input Impedance				100		KΩ
VREFOUT Output Voltage	No load					
	VREFIN = 1.150V	•	1.145	1.150	1.155	V
	VREFIN = 1.250V	•	1.245	1.250	1.255	V
	VREFIN = 1.350V	•	1.345	1.350	1.355	V
VREFOUT Output Current	VDDQ = 2.3V	•	-5		5	mA
VREFOUT Leakage Current	$\overline{SHDN}$ = 0V	•	-10		10	µA
$\overline{SHDN}$ Logic High		•	1.667			V
$\overline{SHDN}$ Logic Low		•			0.800	V
IDD Supply Current	No load, $\overline{SHDN}$ = 2.7V	•		7.5	20	mA
VDDQ Leakage Current	$\overline{SHDN}$ = 0V	•		6	10	µA
VDD Leakage Current	$\overline{SHDN}$ = 0V	•		3	50	µA
$\overline{SHDN}$ Input Current	$\overline{SHDN}$ = 2.7V	•		50	75	µA
Over-Temperature Shutdown				155		˚C
Over-Temperature Hysteresis				30		˚C

Applications Information

Output Capacitor selection

The JEDEC specification for DDR termination requires that VTT stay within ±40mV of VREF, which must track VDDQ/2 within 1%. During the initial load transient, the output capacitor keeps the output within spec. To stay within the 40mV window, the “load step” due to the load transient current dropping across the output capacitor’s ESR should be kept to around 25mV: where ESR <

$\frac{25}{\Delta I}$ is given in mΩ, and ΔI is the maximum load current.

For example, to handle a 3A maximum load transient, the ESR should be no greater than 8mΩ. Furthermore, the output capacitor must be able to hold the load in spec while the regulator recovers (about 15µS). A minimum value of 470µF is recommended.

The FAN1655 requires a minimum of 100µF of input capacitance with a maximum ESR value of 100mΩ to insure stability.

Power Dissipation and Derating

The maximum output current (sink or source) for a 1.25V output is:

$$I_{OUT(MAX)} = \frac{P_{D(MAX)}}{1.25}$$

where $P_{D(MAX)}$ is the maximum power dissipation which is:

$$P_{D(MAX)} = \frac{T_{J(MAX)} - T_A}{\theta_{JA}}$$

where $T_{J(MAX)}$ is the maximum die temperature of the IC and T_A is the operating ambient temperature.

FAN1655 has an internal thermal limit at 150°C, which defines $T_{J(MAX)}$. For the SOIC-14 package, θ_{JA} is given at 88°C/W. Using equation 2, the maximum dissipation at T_A = 25°C is 1.4W, which is its rated maximum dissipation.

The e-TSSOP or MLP package, however, use the PCB copper to cool the IC through the thermal pad on the package bottom. For maximum dissipation, this pad should be soldered to the PCB copper, with as much copper area as possible surrounding it to cool the package. Thermal vias should be placed as close to the thermal pad as possible to transfer heat to other layers of copper on the PCB. With large areas of PCB copper for heat sinking, a θ_{JA} of under 40°C/W can easily be achieved.

Mechanical Dimensions

16-Lead eTSSOP

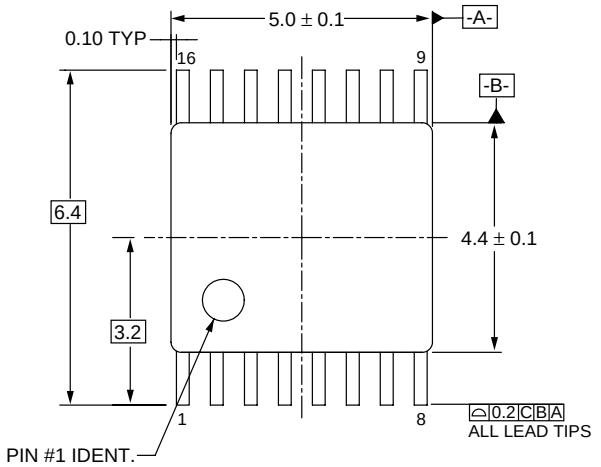

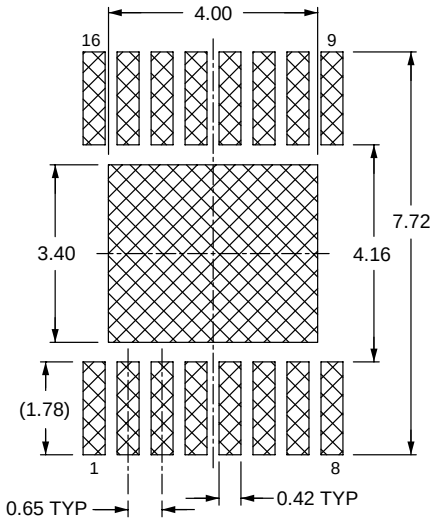

LAND PATTERN RECOMMENDATION

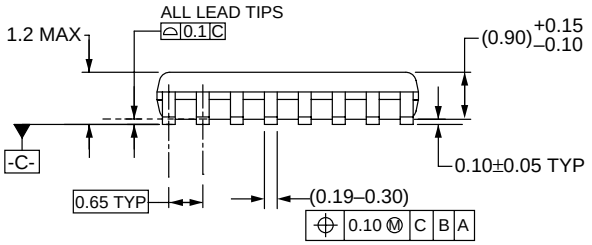

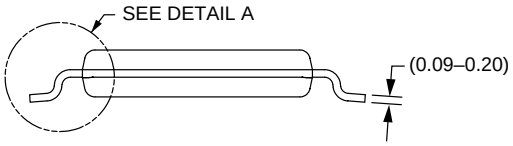

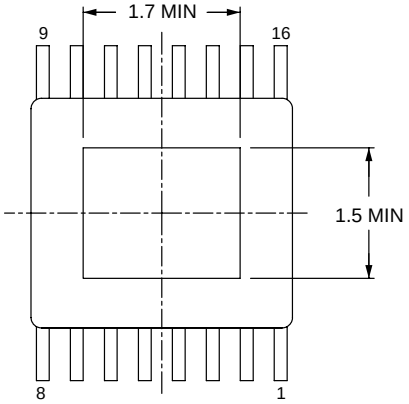

BOTTOM VIEW

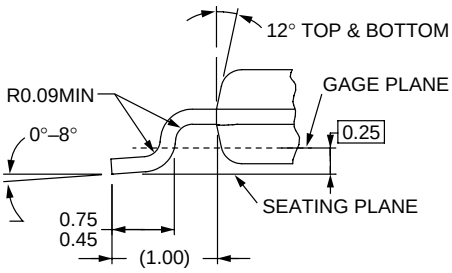

DETAIL A

NOTES:

A. CONFORMS TO JEDEC REGISTRATION MO-153, VARIATION ABT, DATED 10/97.
B. DIMENSIONS ARE IN MILLIMETERS.
C. DIMENSIONS ARE EXCLUSIVE OF BURRS, MOLD FLASH, AND THE BAR EXTENSIONS.
D. DIMENSIONS AND TOLERANCES PER ASME Y14.5M, 1994.

Mechanical Dimensions

14-Lead SOIC

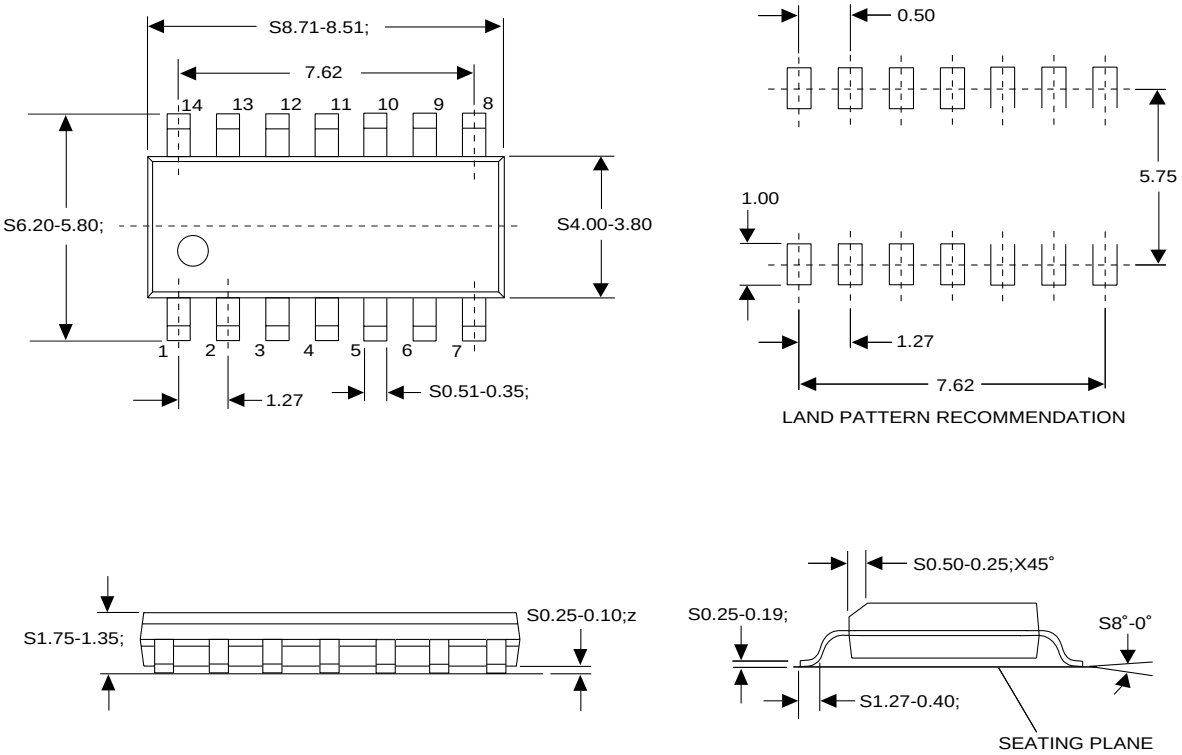

Notes:

1. This package conforms to JEDEC MS-012, variation AB, ISSUEC dated May, 1990.
2. All dimensions are in millimeters
3. Standard lead finished
   200 microinches / 5.08 microns min.
   Lead/Tin (solder) oncopper

Mechanical Dimensions

5mm x 6mm 8-Lead MLP

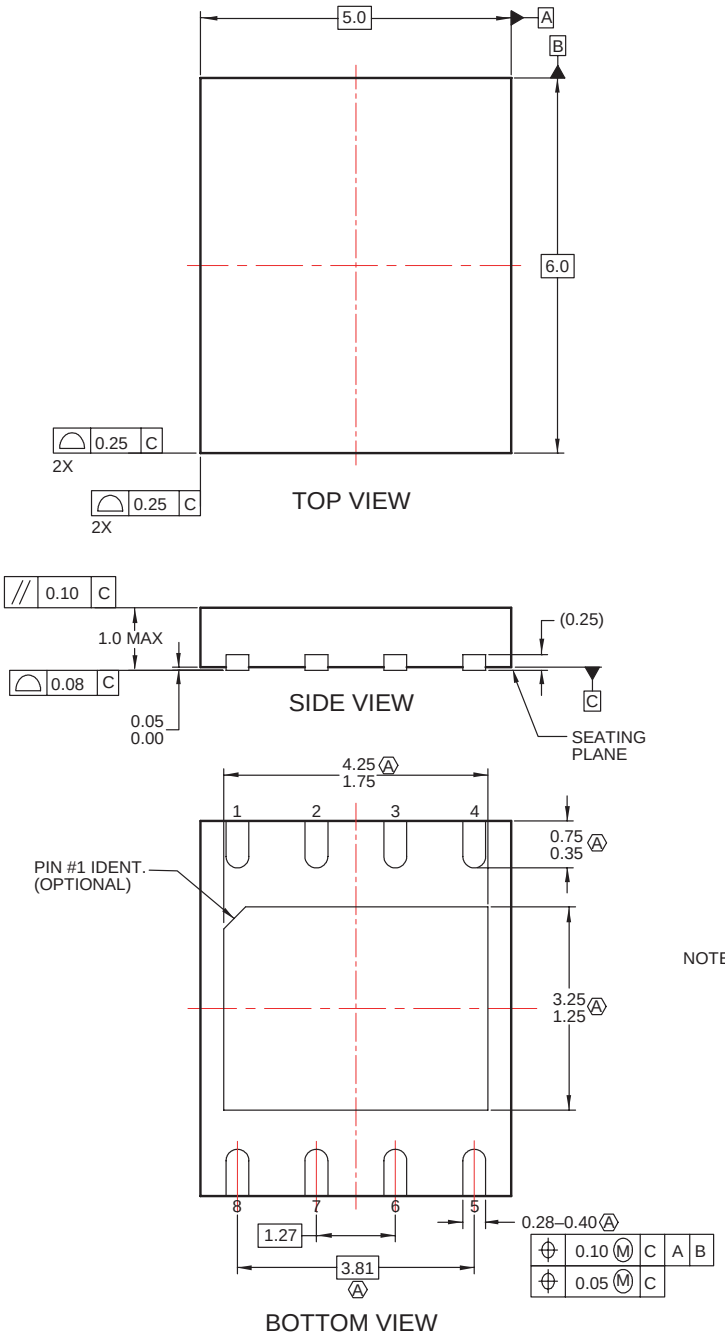

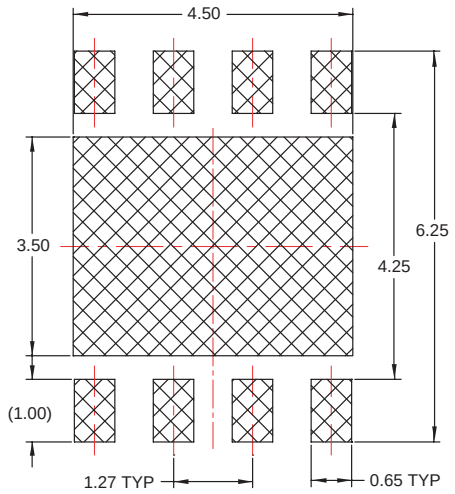

LAND PATTERN RECOMMENDATION

NOTES:

A) DOES NOT FULLY CONFORM TO JEDEC REGISTRATION MO-229, DATED 11/2001.

B) DIMENSIONS ARE IN MILLIMETERS.

C) DIMENSIONING AND TOLERANCES PER ASME Y14.5–1994.

TRADEMARKS

The following are registered and unregistered trademarks Fairchild Semiconductor owns or is authorized to use and is not intended to be an exhaustive list of all such trademarks.

ACEx™	FAST®	ISOPLANAR™	PowerSaver™	SuperSOT™-6
ActiveArray™	FASTr™	LittleFET™	PowerTrench®	SuperSOT™-8
Bottomless™	FPS™	MICROCOUPLER™	QFET®	SyncFET™
Build it Now™	FRFET™	MicroFET™	QS™	TinyLogic®
CoolFET™	GlobalOptoisolator™	MicroPak™	QT Optoelectronics™	TINYOPTO™
CROSSVOLT™	GTO™	MICROWIRE™	Quiet Series™	TruTranslation™
DOME™	HiSeC™	MSX™	RapidConfigure™	UHC™
EcoSPARK™	I^2C™	MSXPro™	RapidConnect™	UltraFET®
E^2CMOS™	*i-Lo*™	OCX™	µSerDes™	UniFET™
EnSigna™	ImpliedDisconnect™	OCXPro™	ScalarPump™	VCX™
FACT™	IntelliMAX™	OPTOLOGIC®	SILENT SWITCHER®	Wire™
FACT Quiet Series™		OPTOPLANAR™	SMART START™	
Across the board. Around the world.™		PACMAN™	SPM™	
The Power Franchise®		POP™	Stealth™	
Programmable Active Droop™		Power247™	SuperFET™	
		PowerEdge™	SuperSOT™-3	

DISCLAIMER

FAIRCHILD SEMICONDUCTOR RESERVES THE RIGHT TO MAKE CHANGES WITHOUT FURTHER NOTICE TO ANY PRODUCTS HEREIN TO IMPROVE RELIABILITY, FUNCTION OR DESIGN. FAIRCHILD DOES NOT ASSUME ANY LIABILITY ARISING OUT OF THE APPLICATION OR USE OF ANY PRODUCT OR CIRCUIT DESCRIBED HEREIN; NEITHER DOES IT CONVEY ANY LICENSE UNDER ITS PATENT RIGHTS, NOR THE RIGHTS OF OTHERS.

LIFE SUPPORT POLICY

FAIRCHILDíS PRODUCTS ARE NOT AUTHORIZED FOR USE AS CRITICAL COMPONENTS IN LIFE SUPPORT DEVICES OR SYSTEMS WITHOUT THE EXPRESS WRITTEN APPROVAL OF FAIRCHILD SEMICONDUCTOR CORPORATION.
As used herein:

1. Life support devices or systems are devices or systems which, (a) are intended for surgical implant into the body, or (b) support or sustain life, or (c) whose failure to perform when properly used in accordance with instructions for use provided in the labeling, can be reasonably expected to result in significant injury to the user.

2. A critical component is any component of a life support device or system whose failure to perform can be reasonably expected to cause the failure of the life support device or system, or to affect its safety or effectiveness.

PRODUCT STATUS DEFINITIONS

Definition of Terms

Datasheet Identification	Product Status	Definition
Advance Information	Formative or In Design	This datasheet contains the design specifications for product development. Specifications may change in any manner without notice.
Preliminary	First Production	This datasheet contains preliminary data, and supplementary data will be published at a later date. Fairchild Semiconductor reserves the right to make changes at any time without notice in order to improve design.
No Identification Needed	Full Production	This datasheet contains final specifications. Fairchild Semiconductor reserves the right to make changes at any time without notice in order to improve design.
Obsolete	Not In Production	This datasheet contains specifications on a product that has been discontinued by Fairchild semiconductor. The datasheet is printed for reference information only.

Rev. I17

НИОКР СИСТЕМС

ООО «НИОКРсистемс» - это оперативные поставки широкого спектра электронных компонентов отечественного и импортного производства напрямую от производителей и с крупнейших мировых складов. Реализуемая нашей компанией продукция насчитывает более полумиллиона наименований.

Благодаря этому наша компания предлагает к поставке практически не ограниченный ассортимент компонентов как оптовыми, мелкооптовыми партиями, так и в розницу.

Благодаря развитой сети поставщиков, помогаем в поиске и приобретении экзотичных или снятых с производства компонентов.

Наша компания это:

- Гарантия качества поставляемой продукции
- Широкий ассортимент
- Минимальные сроки поставок
- Техническая поддержка
- Подбор комплектации
- Индивидуальный подход
- Гибкое ценообразование
- Работаем по 275 ФЗ

ООО «НИОКР СИТЕМС»
Москва, 125362, Россия, ул. Вишневая, д. 9, к. 1, Блок 104 а и 104 в

Телефон: 8 (495) 268-14-82
Email: n@nsistems.ru

ИНН: 7735154786
ОГРН: 1167746717709