ISD1100 SERIES

SINGLE-CHIP,
VOICE RECORD / PLAYBACK DEVICES
10- AND 12-SECOND DURATION

1. GENERAL DESCRIPTION

Winbond's ChipCorder® ISD1100 series provide high-quality, single-chip, Record/Playback solutions to 10- and 12-second messaging applications. The CMOS devices include an on-chip oscillator, microphone preamplifier, automatic gain control, anti-aliasing filter, smoothing filter, and speaker amplifier. A minimum Record/Playback subsystem can be configured with a microphone, a speaker, several passive components, two push buttons and a power source. Recordings are stored into on-chip nonvolatile memory cells, providing zero-power message storage. This unique, single-chip solution is made possible through Winbond's patented Multi-Level Storage (MLS) technology. Voice and audio signals are stored directly into memory in their natural form, providing high-quality, solid-state voice reproduction.

2. FEATURES

- Single 5 volt power supply
- Single-Chip with 10 and 12 seconds duration
- Easy-to-use single-chip, voice record/playback solution
- Push-button interface
    - Playback can be edge- or level-activated
- Fully addressable to handle multiple messages
- Automatic power-down
    - Enters into standby mode automatically following a record or playback operation
    - 0.5 µA Standby current (typical)
- Zero-power message storage
    - Eliminates battery backup circuits
- High-quality, natural voice/audio reproduction
- On-chip oscillator
- No programmer or development system needed
- 100,000 record cycles (typical)
- 100-year message retention (typical)
- Available in die, PDIP, and SOIC
- Temperature: Commercial - Packaged unit : 0°C to 70°C, Die : 0°C to 50°C

3. BLOCK DIAGRAM

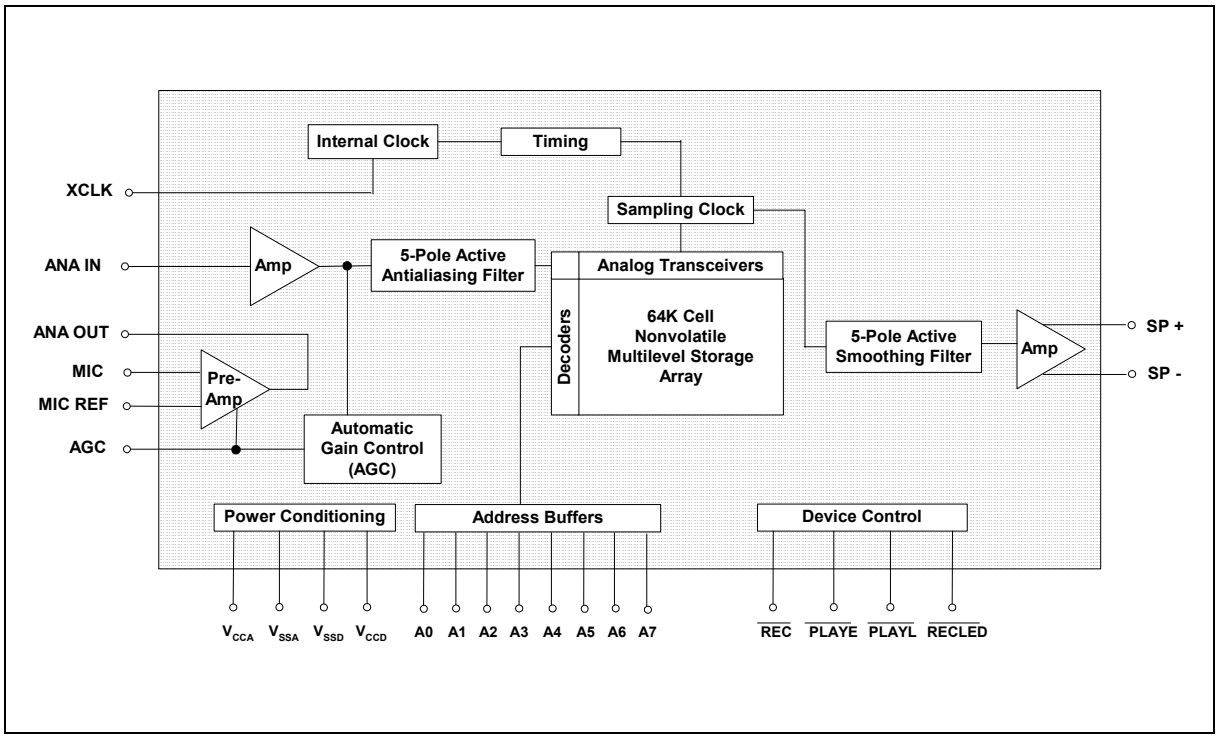

4. TABLE OF CONTENTS

1. GENERAL DESCRIPTION 2
2. FEATURES 2
3. BLOCK DIAGRAM 3
4. TABLE OF CONTENTS 4
5. PIN CONFIGURATION 5
6. PIN DESCRIPTION 6
7. FUNCTIONAL DESCRIPTION 10
7.1. Detailed Description 10
8. TIMING DIAGRAMS 12
9. ABSOLUTE MAXIMUM RATINGS [1] 13
9.1 Operating Conditions 14
10. ELECTRICAL CHARACTERISTICS 15
10.1. Parameters For Packaged Parts 15
10.1.1. Typical Parameter Variation with Voltage and Temperature 18
10.2. Parameters For DIE 19
10.2.1. Typical Parameter Variation with Voltage and Temperature 22
11. TYPICAL APPLICATION CIRCUIT 23
12. PACKAGE DRAWING AND DIMENSIONS 26
12.1. 28-Lead 300mil Plastic Small Outline IC (SOIC) 26
12.2. 28-Lead 600mil Plastic Dual Inline Package (PDIP) 27
12.3. Die Physical Layout [1] 28
13. ORDERING INFORMATION 30
14. VERSION HISTORY 31

5. PIN CONFIGURATION

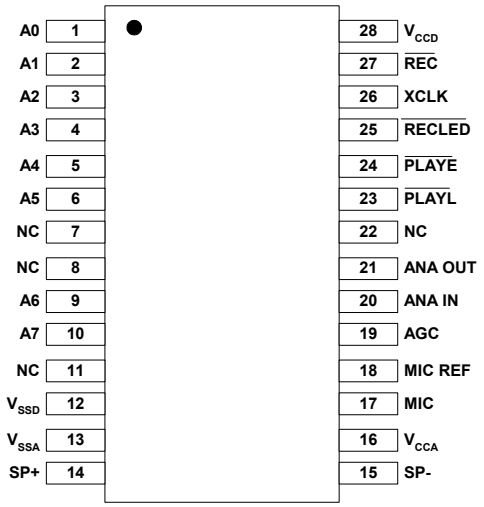

SOIC / PDIP

6. PIN DESCRIPTION

PIN NAME	PIN NO.	FUNCTION
A0-A7	1-6, 9, 10	**Address Inputs**: The address inputs have two functions, depending on the level of the two Most Significant Bits (MSB) of the address (A6 and A7). If either or both of the two MSBs are LOW, all inputs are interpreted as address bits and are used as the start address for the current record or playback cycle. The address pins are inputs only and do not output internal address information as the operation progresses. Address inputs are latched by the falling edge of $\overline{PLAYE}$, $\overline{PLAYL}$, or $\overline{REC}$. If both A6 & A7 are HIGH, then the device is in a special operational mode for looping. Please refer to looping capability section for details. A0, A1, A2, A3, A4 and A5 have internal pull-down resistors, while A6 and A7 have internal pull-up resistors. They can be floating if not used. Each of these internal pull-up or pull-down devices have a value of 50 K Ω to 100 K Ω.
V_{SSA}, V_{SSD}	12, 13	**Ground**: Similar to V_{CCA} and V_{CCD}, separate analog and digital ground rails provide independent analog and digital ground buses internally to minimize noise. These pins should be tied together as close as possible to the device.
SP+, SP-	14, 15	**Speaker Outputs**: The differential SP+ and SP- pins are designed to drive a 16Ω speaker directly. Conversely, with single-ended connection, a coupling capacitor is needed between the SP pin and the speaker. Besides, the output power is about a quarter of that from differential output. The speaker outputs are in high-impedance state during recording and at V_{SSA} during power down.
V_{CCA}, V_{CCD}	16, 28	**Supply Voltages**: Separate analog and digital powers provide power to internal analog and digital circuits respectively to minimize internal noises. These power buses are brought out to separate pads and should be tied together as close to the supply source as possible. It is important that the power supplies are decoupled as close to the device as possible.
MIC	17	**Microphone**: The microphone input transfers its signal to the on-chip preamplifier. An on-chip Automatic Gain Control (AGC) circuit controls the gain of this preamplifier from –15 to 24dB. An external microphone should be AC coupled to this pin via a series capacitor. The capacitor value, together with the internal 10 KΩ resistance on this pin, determines the low-frequency cutoff for the device passband. See Winbond's Application Information for additional information on low-frequency cutoff calculation.

PIN NAME	PIN NO.	FUNCTION
MIC REF	18	**Microphone Reference**: The MIC REF input is the inverting input to the microphone preamplifier. This provides a noise-canceling or common-mode rejection input to the device when connected to a differential microphone.
AGC	19	**Automatic Gain Control (AGC)**: The AGC input dynamically adjusts the gain of the preamplifier to compensate for the wide range of microphone input levels. The AGC allows the full range of sound, from whispers to loud sounds, to be recorded with minimal distortion. The "attack" time is determined by the time constant of a 5 KΩ internal resistance and an external capacitor (C6 of Figure 5 in Section 11) connected from the AGC pin to V_{SSA}. The "release" time is determined by the time constant of an external resistor (R5) and an external capacitor (C6) connected in parallel between the AGC pin and V_{SSA} pin. Nominal values of 470 KΩ and 4.7 µF give satisfactory results in most cases. Tying this to ground gives maximum gain, while tying it to V_{CCA} gives minimum gain for the AGC amplifier.
ANA IN	20	**Analog Input**: The ANA IN transfers an input signal to the chip for recording. For microphone usage, this ANA IN pin should be connected via an external capacitor to the ANA OUT pin. This capacitor value, together with the 3 KΩ input impedance of ANA IN, is selected to give additional cutoff at the low-frequency end of the voice passband. If the desired input is derived from a source other than a microphone, the signal can be capacitively coupled into the ANA IN pin directly.
ANA OUT	21	**Analog Output**: This pin provides the preamplifier output to the user. The voltage gain of the preamplifier is determined by the voltage level at the AGC pin.
$\overline{\text{PLAYL}}$ [2][3]	23	**Playback, Level-Activated**: When this input signal is held LOW, a playback cycle is initiated, and playback continues until $\overline{\text{PLAYL}}$ is pulled HIGH, or an EOM marker is detected. The device automatically powers down and enters into standby mode upon completion of a playback cycle. This pin has an internal pull-up resistor.
$\overline{\text{PLAYE}}$ [2][3]	24	**Playback, Edge-Activated**: When a LOW-going transition is detected on this pin, a playback cycle begins. Taking $\overline{\text{PLAYE}}$ HIGH during a playback cycle will not terminate the current cycle. Playback continues until an EOM is encountered. Upon completion of a playback cycle, the device automatically powers down and enters into standby mode. This pin has an internal pull-up device.

PIN NAME	PIN NO.	FUNCTION
$\overline{\text{RECLED}}$	25	**Record LED**: The $\overline{\text{RECLED}}$ output is LOW during a record cycle. It can be used to drive an LED to indicate a record cycle is in progress. In addition, $\overline{\text{RECLED}}$ pulses LOW momentarily when an end-of-message is encountered in a playback operation.
XCLK	26	**External Clock**: The external clock input has an internal pull-down resistor. The ISD1100 is configured at the factory with an internal sampling clock frequency that guarantees its minimum nominal record/playback time. For instance, an ISD1110 operating within specification will be observed to always have a minimum of 10 seconds of recording time. The sampling frequency is then maintained to a variation of ±2.25 percent over the commercial temperature and operating voltage ranges while still maintaining the minimum duration specified. As a result some devices will have a few percent more than nominal recording time. If greater precision is required, the device can be clocked through the XCLK pin as follows: **EXTERNAL CLOCK SAMPLE RATES** Part Number / Sample Rate / Required Clock ISD1110 / 6.4 kHz / 819.2 kHz ISD1112 / 5.3 kHz / 682.7 kHz These recommended clock rates should not be varied because the anti-aliasing and smoothing filters are fixed, and aliasing problems can occur if the sample rate differs from the one recommended. The duty cycle on the input clock is not critical, as the clock is immediately divided by two. **If the XCLK is not used, this pin must be grounded.** Please see Application Information for the ISD1100 series for more details on external clocking.

PIN NAME	PIN NO.	FUNCTION
$\overline{REC}$ [1][3]	27	**Record**: The $\overline{REC}$ input is an active-LOW signal. The device records whenever $\overline{REC}$ is LOW. This signal must remain LOW for the duration of the recording. A record cycle is completed when $\overline{REC}$ is pulled HIGH or the memory space is filled up. $\overline{REC}$ takes precedence over either playback ($\overline{PLAYE}$ or $\overline{PLAYL}$) signal. If $\overline{REC}$ is pulled LOW during a playback cycle, the playback immediately ceases and recording begins. An end-of-message (EOM) marker is internally recorded, enabling a subsequent playback cycle to terminate appropriately. The device automatically powers down into standby mode when $\overline{REC}$ goes HIGH. This pin has an internal pull-up resistor.
NC	11	**NC**: No connect

Notes:

[1] The $\overline{REC}$ signal is debounced for 50 ms on the rising edge to prevent a false retriggering from a push-button switch.

[2] During playback, if either $\overline{PLAYE}$ or $\overline{PLAYL}$ is held LOW during EOM or OVF, the device will still enter into standby mode and the internal oscillator and timing generator will stop. However, the rising edge of $\overline{PLAYE}$ and $\overline{PLAYL}$ are not debounced and any subsequent falling edge (particularly switch bounce) present on the input pins will initiate another playback.

[3] $\overline{REC}$, $\overline{PLAYL}$ and $\overline{PLAYE}$ have internal pull-ups to V_{CC}. Holding on these pins LOW wil increase standby current consumption.

7. FUNCTIONAL DESCRIPTION

7.1. DETAILED DESCRIPTION

Speech/Sound Quality

Winbond's patented ChipCorder® technology provides natural audio record and playback. The ISD1100 series include devices of 5.3 kHz and 6.4 kHz sampling frequencies, allowing the user a choice of speech quality options. The input voice signals are stored directly into non-volatile EEPROM cells and are reproduced without the synthetic effect often heard with digital solid-state speech solutions. A complete sample is stored in a single cell, minimizing the memory necessary to store a recording of a given duration.

Duration

The ISD1100 series offer single-chip solutions of 10 and 12 seconds duration.

TABLE 1: ISD1100 SERIES PRODUCT SUMMARY

Part Number	Duration (Seconds)	Input Sample Rate (kHz)	Typical Filter Pass Band* (kHz)
ISD1110	10	6.4	2.6
ISD1112	12	5.3	2.2

* 3dB roll-off-point….

EEPROM Storage

One of the benefits of Winbond's ChipCorder® technology is the use of on-chip non-volatile memory, providing zero-power message storage. The message is retained for up to 100 years typically without power. In addition, the device can be re-recorded typically over 100,000 times.

Basic Operation

The ISD1100 ChipCorder® series are controlled by a single signal, $\overline{REC}$, or one of two playback control signals, $\overline{PLAYE}$ (edge-activated playback), and $\overline{PLAYL}$ (level-activated playback). The ISD1100 series parts are configured for simplicity of design in a single/multiple-message application. Using the address lines will allow multiple message applications.

Automatic Power-Down Mode

At the end of a playback or record operation, the ISD1100 series automatically enters into a standby mode, with typically 0.5 µA current. During a playback cycle, the device powers down automatically at the end of the message. During a record cycle, the device powers down immediately after $\overline{REC}$ is released HIGH.

Addressing

In addition to single-message application, the ISD1100 series provides a full addressing capability for multiple message application.

The memory array of ISD1100 series has 80 distinct addressable rows, providing the below resolutions per row. See Application Information for address tables of ISD1100 series.

TABLE 2: DEVICE PLAYBACK/RECORD DURATIONS

Part Number	Minimum Duration (per ROW)
ISD1110	125 msec
ISD1112	150 msec

Looping Capability

The ISD1100 series device has a built-in looping function enabling it to continuously repeat a single message. This mode is accomplished by taking A3, A6 and A7 pins HIGH simultaneously to continuously loop from the end of the message to the beginning of the message. Looping is initiated by a negative transition on $\overline{\text{PLAYE}}$ pin with A3, A6 and A7 held HIGH, then $\overline{\text{PLAYE}}$ is brought back to HIGH. Looping will continue indefinitely with all three control pins ($\overline{\text{PLAYE}}$, $\overline{\text{PLAYL}}$, $\overline{\text{REC}}$) remaining HIGH, until $\overline{\text{PLAYL}}$ is pulsed to LOW, which ends the looping.

8. TIMING DIAGRAMS

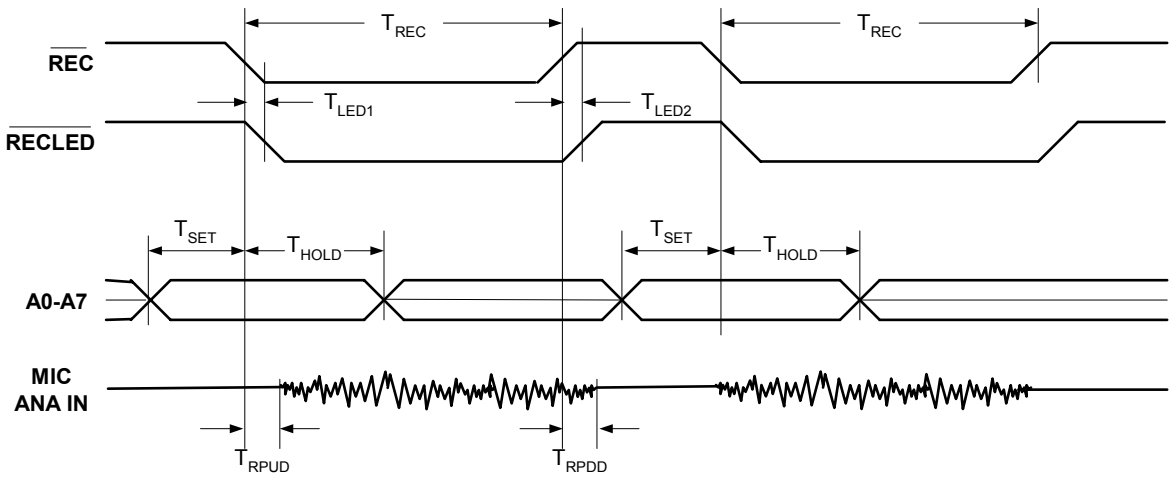

FIGURE 1: RECORD

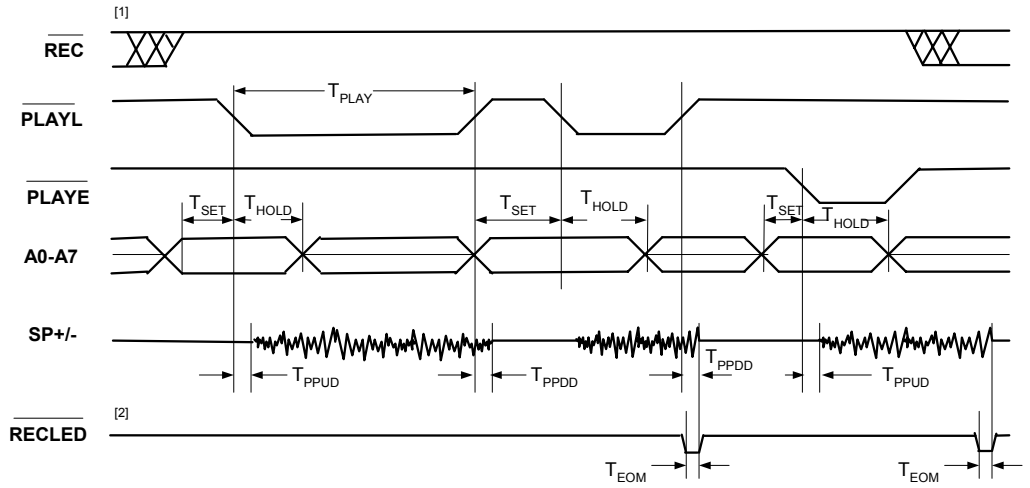

[1] REC must be HIGH for the entire duration of a playback cycle.
[2] RECLED functions as an EOM playback.

FIGURE 2: PLAYBACK

9. ABSOLUTE MAXIMUM RATINGS [1]

TABLE 3: ABSOLUTE MAXIMUM RATINGS (PACKAGED PARTS)

CONDITIONS	VALUES
Junction temperature	150°C
Storage temperature range	-65°C to +150°C
Voltage applied to any pin	(V_{SS} – 0.3V) to (V_{CC} + 0.3V)
Voltage applied to any pins (Input current limited to ±20 mA)	(V_{SS} – 1.0V) to (V_{CC} + 1.0V)
Lead temperature (Soldering – 10sec)	300°C
V_{CC} – V_{SS}	-0.3V to +7V

TABLE 4: ABSOLUTE MAXIMUM RATINGS (DIE)

CONDITIONS	VALUES
Junction temperature	150°C
Storage temperature range	-65°C to +150°C
Voltage applied to any pad	(V_{SS} – 0.3V) to (V_{CC} + 0.3V)
Voltage applied to any pad (Input current limited to ±20mA)	(V_{SS} – 1.0V) to (V_{CC} + 1.0V)
V_{CC} – V_{SS}	-0.3V to +7V

[1] Stresses above those listed may cause permanent damage to the device. Exposure to the absolute maximum ratings may affect device reliability and performance. Functional operation is not implied at these conditions.

9.1 OPERATING CONDITIONS

TABLE 5: OPERATING CONDITIONS (PACKAGED PARTS)

CONDITIONS	VALUES
Commercial operating temperature range (Case temperature)	0°C to +70°C
Supply voltage (V_{CC}) [1]	+4.5V to +5.5V
Ground voltage (V_{SS}) [2]	0V

TABLE 6: OPERATING CONDITIONS (DIE)

CONDITIONS	VALUES
Commercial operating temperature range	0°C to +50°C
Supply voltage (V_{CC}) [1]	+4.5V to +6.5V
Ground voltage (V_{SS}) [2]	0V

[1] $V_{CC} = V_{CCA} = V_{CCD}$

[2] $V_{SS} = V_{SSA} = V_{SSD}$

10. ELECTRICAL CHARACTERISTICS

10.1. PARAMETERS FOR PACKAGED PARTS

TABLE 7: DC PARAMETERS

PARAMETERS	SYMBOLS	MIN[2]	TYP[1]	MAX[2]	UNITS	CONDITIONS
Input Low Voltage	V_{IL}			0.8	V	
Input High Voltage	V_{IH}	2.4			V	
Output Low Voltage	V_{OL}			0.4	V	I_{OL} = 4.0 mA
Output High Voltage	V_{OH}	2.4			V	I_{OH} = -1.6 µA
V_{CC} Current (Operating)	I_{CC}		15	30	mA	V_{CC} = 5.5V[3], R_{EXT} = ∞
V_{CC} Current (Standby)	I_{SB}		0.5	2	µA	[3] [4]
Input Leakage Current	I_{IL}			±1	µA	
Input Current LOW w/ Pull Up	I_{ILPU}			-130	µA	Force V_{SS} [5]
Input Current HIGH w/ Pull Down	I_{ILPD}			130	µA	Force V_{CC} [6]
Output Load Impedance	R_{EXT}	16			Ω	Speaker Load
Preamp Input Resistance	R_{MIC}		10		KΩ	Pins 17, 18
ANA IN Input Resistance	$R_{ANA\ IN}$		3		KΩ	
Preamp Gain 1	A_{PRE1}		24		dB	AGC = 0.0V
Preamp Gain 2	A_{PRE2}		-45	-15	dB	AGC = 2.5V
ANA IN to SP+/- Gain	A_{ARP}		22		dB	
AGC Output Resistance	R_{AGC}		5		KΩ	
Preamp Out Source	I_{PREH}		-2		mA	@ V_{OUT} = 1.0V
Preamp In Sink	I_{PREL}		0.5		mA	@ V_{OUT} = 2.0V

Notes:

[1] Typical values @ T_A = 25° and V_{CC} = 5.0V.

[2] All Min/Max limits are guaranteed by Winbond via electrical testing or characterization. Not all specifications are 100 percent tested.

[3] V_{CCA} and V_{CCD} connected together.

[4] $\overline{REC}$, $\overline{PLAYL}$, and $\overline{PLAYE}$ must be at V_{CCD}.

[5] XCLK pin only.

[6] A0-A5, XCLK.

TABLE 8: AC PARAMETERS – Packaged parts

CHARACTERISTIC	SYMBOLS	MIN[2]	TYP[1]	MAX[2]	UNITS	CONDITIONS
Sampling Frequency	F_S					
ISD1110				6.4	kHz	[5]
ISD1112				5.3	kHz	[5]
Filter Pass Band	F_{CF}					
ISD1110			2.6		kHz	3 dB Roll-Off Point [3][6]
ISD1112			2.2		kHz	3 dB Roll-Off Point [3][6]
Record Duration	T_{REC}					
ISD1110		10			sec	
ISD1112		12			sec	
Playback Duration	T_{PLAY}					
ISD1110		10			sec	[5]
ISD1112		12			sec	[5]
$\overline{\text{RECLED}}$ ON Delay	T_{LED1}		5		µsec	
$\overline{\text{RECLED}}$ OFF Delay	T_{LED2}					
ISD1110		40	48.5	100	msec	
ISD1112		50	58.3	105	msec	
A0-A7 Setup Time	T_{SET}	300			nsec	
A0-A7 Hold Time	T_{HOLD}	0			nsec	
Record Power-Up Delay	T_{RPUD}					
ISD1110			32		msec	
ISD1112			39		msec	
Record Power-Down Delay	T_{RPDD}					
ISD1110			32		msec	
ISD1112			39		msec	
Play Power-Up Delay	T_{PPUD}					
ISD1110			32		msec	
ISD1112			39		msec	
Play Power-Down Delay	T_{PPDD}					
ISD1110			8.1		msec	
ISD1112			9.7		msec	

TABLE 8 (cont'd)

CHARACTERISTIC	SYMBOL	MIN[2]	TYP[1]	MAX[2]	UNITS	CONDITIONS
$\overline{EOM}$ Pulse Width ISD1110 ISD1112	T_{EOM}		 15.625 18.75		 msec msec	
Total Harmonic Distortion	THD		1		%	@ 1 kHz
Speaker Output Power	P_{OUT}		12.2		mW	R_{EXT} = 16 Ω
Voltage Across Speaker Pins	V_{OUT}		1.25	2.5	mVp-p	R_{EXT} = 600 Ω
MIC Input Voltage	V_{IN1}			20	mV	Peak-to-Peak [4]
ANA IN Input Voltage	V_{IN2}			50	mV	Peak-to-Peak

Notes:

[1] Typical values @ T_A = 25° and V_{CC} = 5.0V.

[2] All Min/Max limits are guaranteed by Winbond via electrical testing or characterization. Not all specifications are 100 percent tested.

[3] Low-frequency cutoff depends upon the value of external capacitors (see Pin Descriptions)

[4] With 5.1 KΩ series resistor at ANA IN.

[5] Sampling Frequency and playback Duration can vary as much as ±2.25 percent over the commercial temperature and voltage ranges. All devices will meet the maximum sampling frequency and minimum playback duration parameters. For greater stability, an external clock can be utilized (see Pin Descriptions)

[6] Filter specification applies to the antialiasing filter and the smoothing filter. Typical Parameter Variation with Voltage and Temperature. This parameter is not checked during production testing and may vary due to process variations and other factors. Therefore, the customer should not rely upon this value for testing purposes.

10.1.1. Typical Parameter Variation with Voltage and Temperature

Chart 1: Record Mode Operating Current (I_{CC})

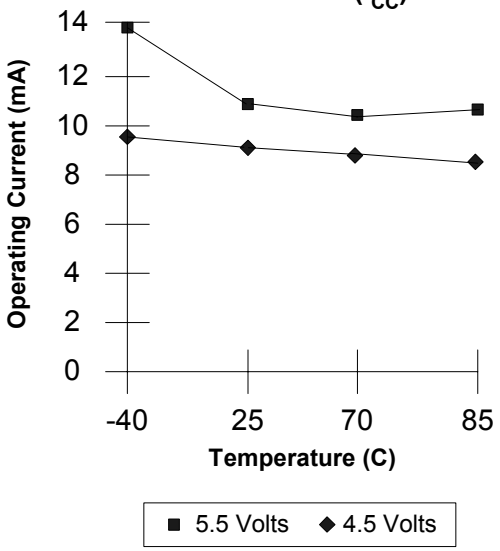

Chart 3: Standby Current (I_{SB})

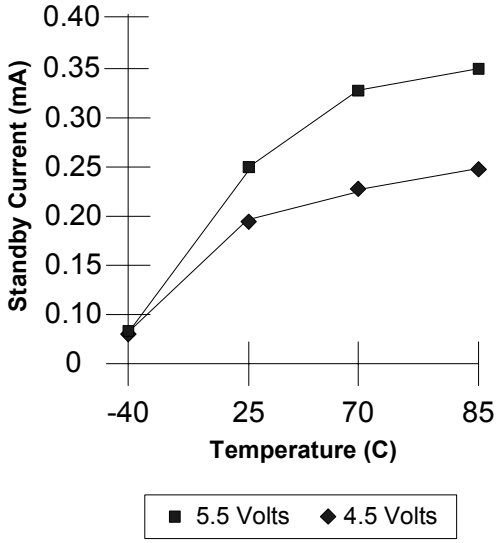

Chart 2: Total Harmonic Distortion

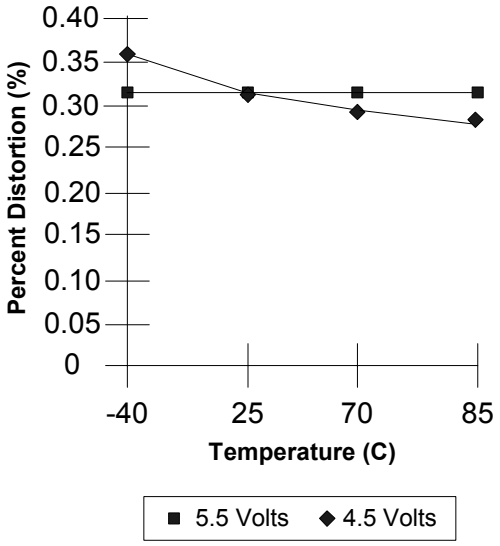

Chart 4: Oscillator Stability

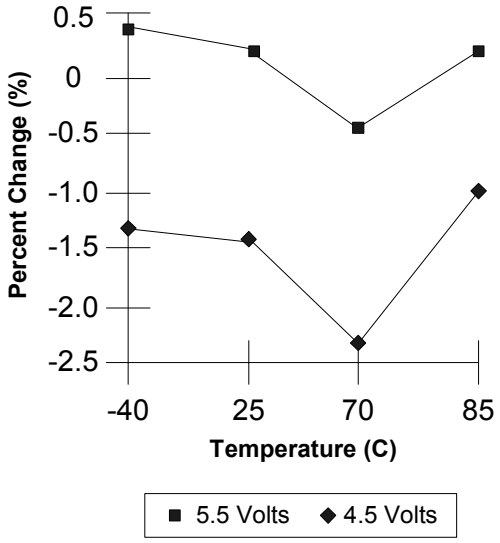

10.2. PARAMETERS FOR DIE

TABLE 9: DC PARAMETERS

PARAMETERS	SYMBOLS	MIN[2]	TYP[1]	MAX[2]	UNITS	CONDITIONS
Input Low Voltage	V_{IL}			0.8	V	
Input High Voltage	V_{IH}	2.4			V	
Output Low Voltage	V_{OL}			0.4	V	I_{OL} = 4.0 mA
Output High Voltage	V_{OH}	2.4			V	I_{OH} = -1.6 µA
V_{CC} Current (Operating)	I_{CC}		15	30	mA	V_{CC} = 5.5V [3], R_{EXT} = ∞
V_{CC} Current (Standby)	I_{SB}		0.5	2	µA	[3][4]
Input Leakage Current	I_{IL}			±1	µA	
Input Current HIGH w/ Pull Up	I_{ILPU}			-130	µA	Force V_{CC} [5]
Input Current HIGH w/ Pull Down	I_{ILPD}			130	µA	Force V_{CC} [6]
Output Load Impedance	R_{EXT}	16			Ω	Speaker Load
Preamp Input Resistance	R_{MIC}		10		KΩ	Pads 17,18
ANA IN Input Resistance	$R_{ANA\ IN}$		3		KΩ	
Preamp Gain 1	A_{PRE1}		24		dB	AGC = 0.0V
Preamp Gain 2	A_{PRE2}		-45	-15	dB	AGC = 2.5V
ANA IN to SP+/- Gain	A_{ARP}		22		dB	
AGC Output Resistance	R_{AGC}		5		KΩ	
Preamp Out Source	I_{PREH}		-2		mA	@ V_{OUT} = 1.0V
Preamp In Sink	I_{PREL}		0.5		mA	@ V_{OUT} = 2.0V

Notes:

[1] Typical values @ T_A = 25° and V_{CC} = 5.0V.

[2] All Min/Max limits are guaranteed by Winbond via electrical testing or characterization. Not all specifications are 100 percent tested.

[3] V_{CCA} and V_{CCD} connected together.

[4] $\overline{REC}$, $\overline{PLAYL}$, and $\overline{PLAYE}$ must be at V_{CCD}.

[5] XCLK pin only.

[6] A0-A5, XCLK.

TABLE 10: AC PARAMETERS

CHARACTERISTIC	SYMBOL	MIN[2]	TYP[1]	MAX[2]	UNITS	CONDITIONS
Sampling Frequency	F_S					
ISD1110				6.4	kHz	[5]
ISD1112				5.3	kHz	[5]
Filter Pass Band	F_{CF}					
ISD1110			2.6		kHz	3 dB Roll-Off Point [3][6]
ISD1112			2.2		kHz	3 dB Roll-Off Point [3][6]
Record Duration	T_{REC}					
ISD1110		10			sec	
ISD1112		12			sec	
Playback Duration	T_{PLAY}					
ISD1110		10			sec	[5]
ISD1112		12			sec	[5]
$\overline{\text{RECLED}}$ ON Delay	T_{LED1}		5		µsec	
$\overline{\text{RECLED}}$ OFF Delay	T_{LED2}					
ISD1110		40	48.5	100	msec	
ISD1112		50	58.3	105	msec	
Address Setup Time	T_{SET}	300			nsec	
Address Hold Time	T_{HOLD}	0			nsec	
Power-Up Delay	T_{RPUD}					
ISD1110			32		msec	
ISD1112			39		msec	
PD Pulse Width (Record)	T_{RPDD}					
ISD1110			32		msec	
ISD1112			39		msec	
Play Power-Up Delay	T_{PPUD}					
ISD1110			32		msec	
ISD1112			39		msec	
Play Power-Down Delay	T_{PPDD}					
ISD1110			8.1		msec	
ISD1112			9.7		msec	

TABLE 10 (cont'd)

CHARACTERISTIC	SYMBOL	MIN[2]	TYP[1]	MAX[2]	UNITS	CONDITIONS
$\overline{EOM}$ Pulse Width ISD1110 ISD1112	T_{EOM}		 16.625 18.75		 msec msec	
Total Harmonic Distortion	THD		1		%	@ 1 kHz
Speaker Output Power	P_{OUT}		12.2		mW	R_{EXT} = 16 Ω [4]
Voltage Across Speaker Pins	V_{OUT}		1.25	2.5	mVp-p	R_{EXT} = 600 Ω
MIC Input Voltage	V_{IN1}			20	mV	Peak-to-Peak [4]
ANA IN Input Voltage	V_{IN2}			50	mV	Peak-to-Peak

Notes:

[1] Typical values @ T_A = 25° and V_{CC} = 5.0V.

[2] All Min/Max limits are guaranteed by Winbond via electrical testing or characterization. Not all specifications are 100 percent tested.

[3] Low-frequency cutoff depends upon the value of external capacitors (see Pin Descriptions)

[4] With 5.1 KΩ series resistor at ANA IN.

[5] Sampling Frequency and playback Duration can vary as much as ±2.25 percent over the commercial temperature and voltage ranges. All devices will meet the maximum sampling frequency and minimum playback duration parameters. For greater stability, an external clock can be utilized (see Pin Descriptions)

[6] Filter specification applies to the antialiasing filter and the smoothing filter. Typical Parameter Variation with Voltage and Temperature. This parameter is not checked during production testing and may vary due to process variations and other factors. Therefore, the customer should not rely upon this value for testing purposes.

10.2.1. Typical Parameter Variation with Voltage and Temperature

Chart 5: Record Mode Operating Current (I_{CC})

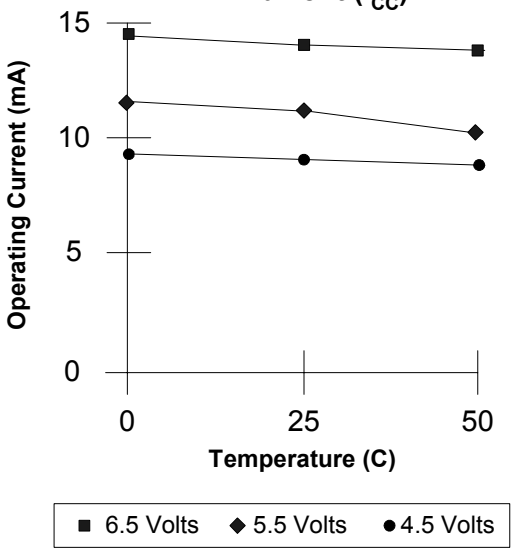

Chart 7: Standby Current (I_{SB})

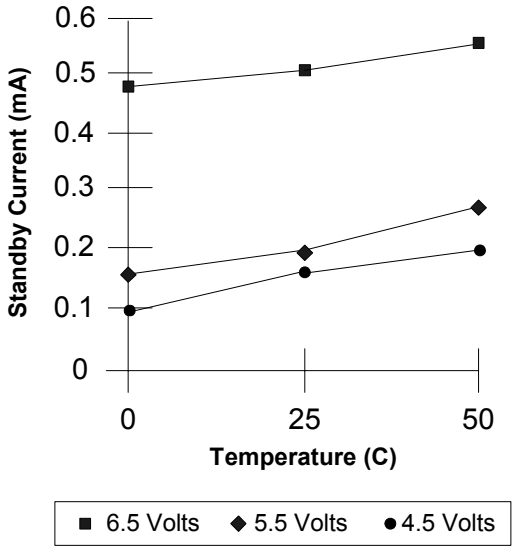

Chart 6: Total Harmonic Distortion

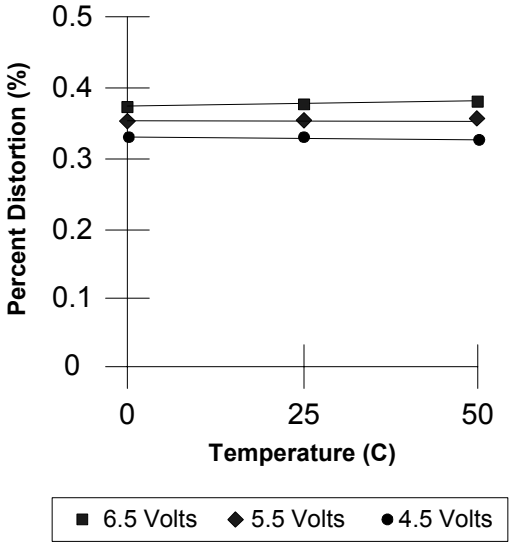

Chart 8: Oscillator Stability

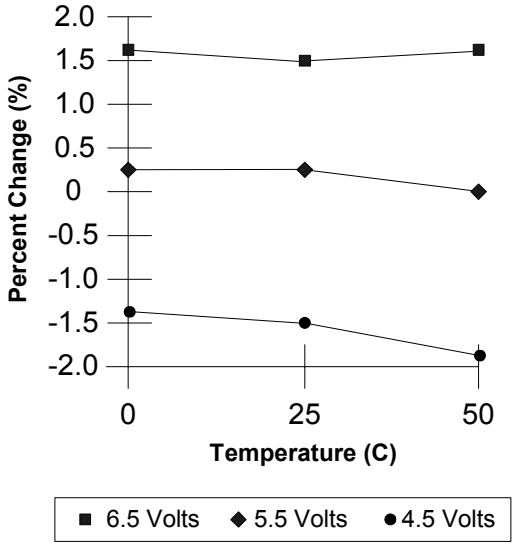

11. TYPICAL APPLICATION CIRCUIT

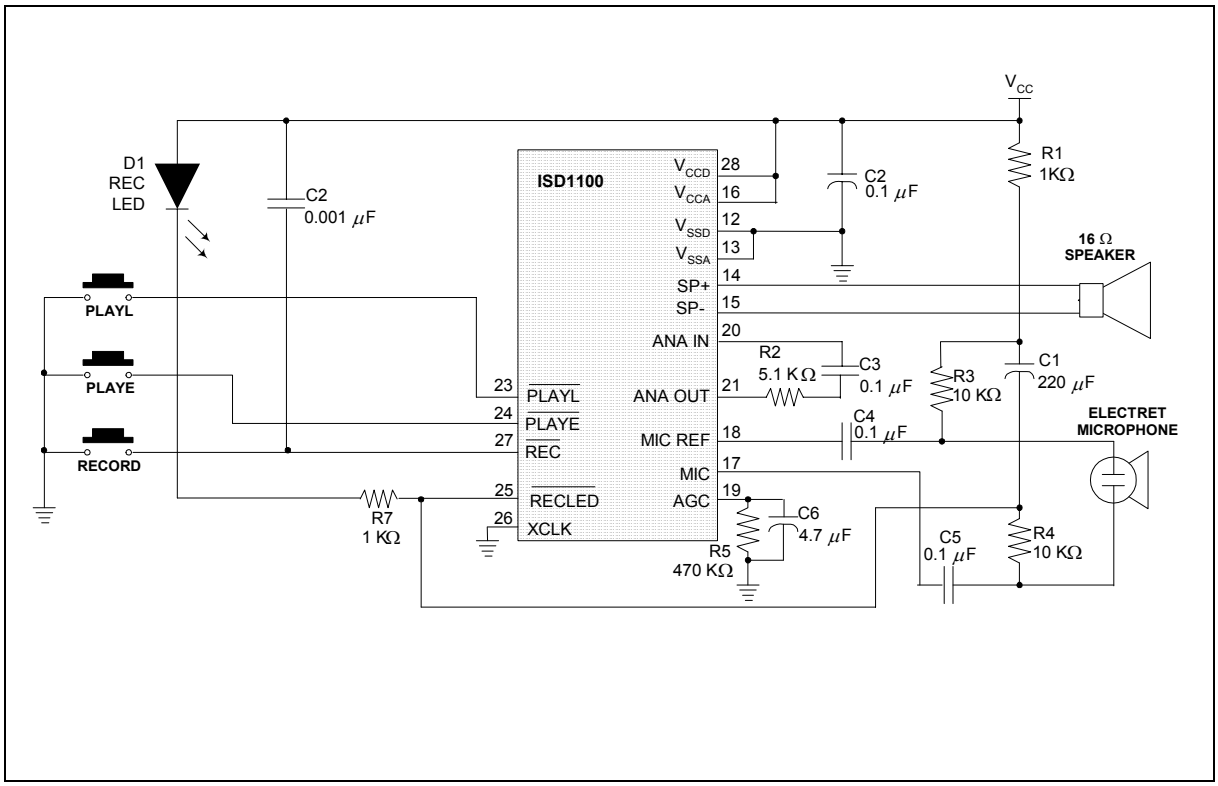

FIGURE 5: APPLICATION EXAMPLE

Functional Description Example

The following operating sequence example demonstrates the functionality of the ISD1100 series.

1. Record a message:

   Pulling the $\overline{REC}$ signal LOW initiates a record cycle from current location. When $\overline{REC}$ is held LOW, the recording continues. Until the memory array is filled up or when $\overline{REC}$ is pulled HIGH, recording ceases. An EOM marker is written at the end of message. Then the device will automatically power down.

2. Edge-activated playback:

   Pulling the $\overline{PLAYE}$ signal LOW initiates a playback cycle from the beginning of the message until the entire message is played. The rising edge of $\overline{PLAYE}$ has no effect on operation. When the EOM marker is encountered, the device automatically powers down. A subsequent falling edge on $\overline{PLAYE}$ initiates a new playback operation from the beginning of the message.

3. Level-activated playback:

   Holding the $\overline{PLAYL}$ signal LOW initiates a playback cycle from the beginning of the message, until $\overline{PLAYL}$ is pulled HIGH or when the EOM marker is encountered, playback operation stops and the device automatically powers down.

4. Record (interrupting playback).

   The $\overline{REC}$ signal takes precedence over playback operation. Holding $\overline{REC}$ LOW initiates a new record operation from current location, regardless of any current operation in progress.

5. $\overline{RECLED}$ operation.

   During record, the $\overline{RECLED}$ output pin provides an active-LOW signal, which can be used to drive an LED as a “record-in-progress” indicator. It returns to a HIGH state when the $\overline{REC}$ pin is pulled HIGH or when the recording is completed due to the memory being filled. However, during playback, this pin also pulses LOW to indicate an EOM at the end of a message.

Applications Note

Some users may experience an unexpected recording taking place when their circuit is powered up, or the batteries are changed, and V_{CC} rises faster than $\overline{REC}$. This undesired recording prevents playback of the previously recorded message. A spurious EOM marker appears at the very beginning of the memory, preventing access to the original message, and nothing is played.

To prevent this occurrence, install a capacitor (approx. 0.001 µF) between the $\overline{REC}$ and V_{CC} pins. This pulls the control pin voltage up with V_{CC} as it rises. Once the voltage is HIGH, the pull-up device will keep the pin HIGH until intentionally pulled LOW, preventing the false EOM marker.

Since this condition is dependent upon factors such as the capacitance of the user's printed circuit board, not all circuit designs will exhibit the spurious marker. It is recommended, however, that the capacitor is included for design reliability. A more detailed explanation and resolution of this occurrence is described in Application Information.

12. PACKAGE DRAWING AND DIMENSIONS

12.1. 28-LEAD 300MIL PLASTIC SMALL OUTLINE IC (SOIC)

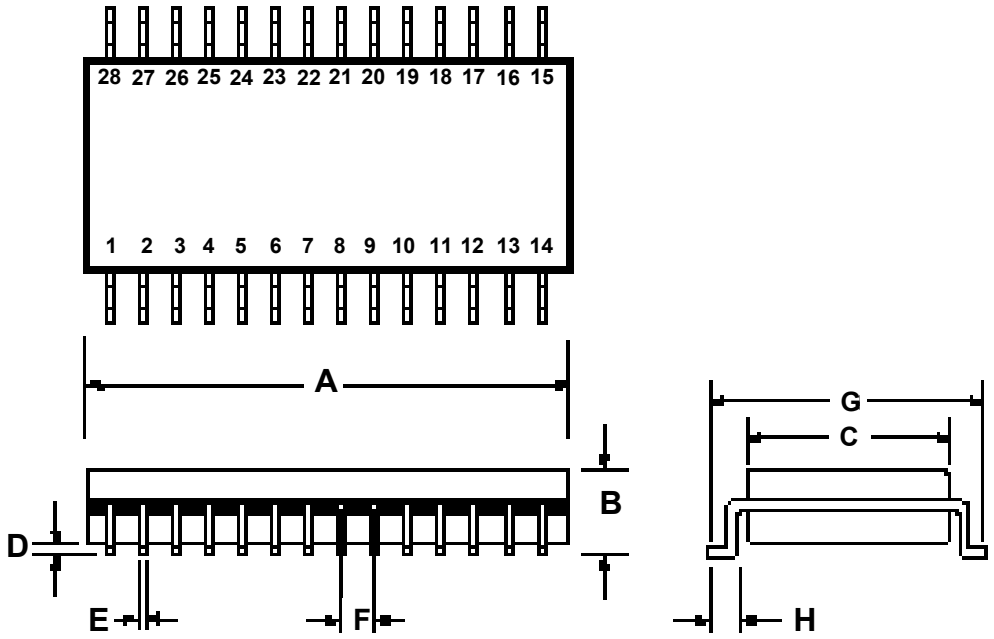

	INCHES			MILLIMETERS		
	Min	Nom	Max	Min	Nom	Max
A	0.701	0.706	0.711	17.81	17.93	18.06
B	0.097	0.101	0.104	2.46	2.56	2.64
C	0.292	0.296	0.299	7.42	7.52	7.59
D	0.005	0.009	0.0115	0.127	0.22	0.29
E	0.014	0.016	0.019	0.35	0.41	0.48
F		0.050			1.27	
G	0.400	0.406	0.410	10.16	10.31	10.41
H	0.024	0.032	0.040	0.61	0.81	1.02

Note: Lead coplanarity to be within 0.004 inch.

12.2. 28-LEAD 600MIL PLASTIC DUAL INLINE PACKAGE (PDIP)

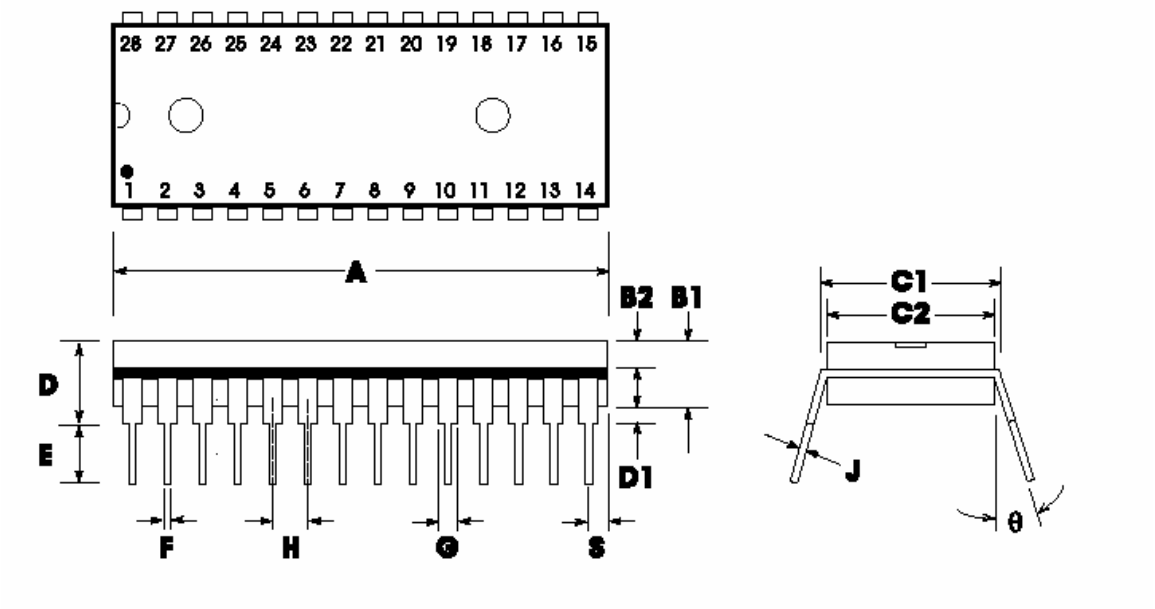

	INCHES			MILLIMETERS		
	Min	Nom	Max	Min	Nom	Max
A	1.445	1.450	1.455	36.70	36.83	36.96
B1		0.150			3.81	
B2	0.065	0.070	0.075	1.65	1.78	1.91
C1	0.600		0.625	15.24		15.88
C2	0.530	0.540	0.550	13.46	13.72	13.97
D			0.19			4.83
D1	0.015			0.38		
E	0.125		0.135	3.18		3.43
F	0.015	0.018	0.022	0.38	0.46	0.56
G	0.055	0.060	0.065	1.40	1.52	1.62
H		0.100			2.54	
J	0.008	0.010	0.012	0.20	0.25	0.30
S	0.070	0.075	0.080	1.78	1.91	2.03
q	0°		15°	0°		15°

Note: Lead coplanarity to be within 0.005 inch.

12.3. DIE PHYSICAL LAYOUT [1]

ISD1100X

- Die Dimensions
  X: 172.2 ± 1 mils
  Y: 138.2 ± 1 mils

- Die Thickness [2]
  17.5 ± .1 mils

- Pad Opening
  88 x 112 microns
  3.46 x 4.41 mils

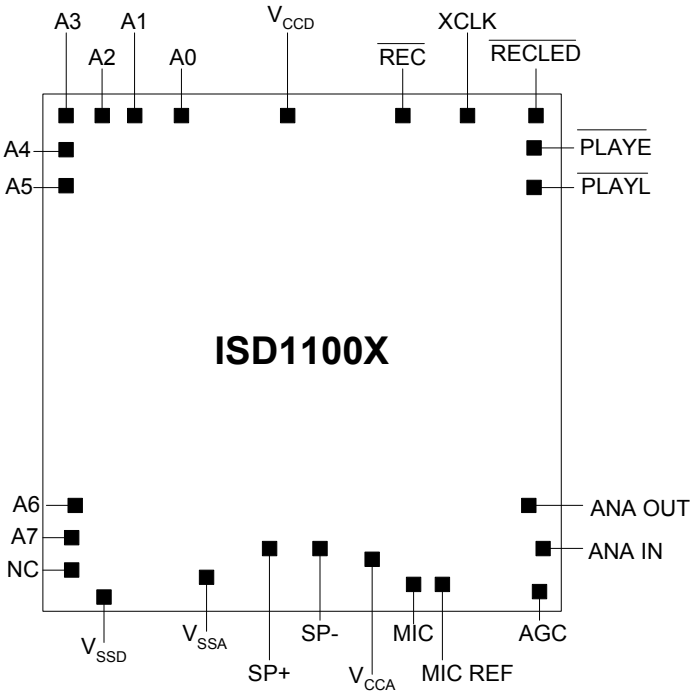

Notes:

[1] The backside of die is internally connected to V_{SS}. It **MUST NOT** be connected to any other potential or damage may occur.

[2] Die thickness is subject to change, please contact Winbond factory for status.

ISD1100 SERIES PAD DESIGNATIONS

(with respect to die center)

PAD	PAD Name	X Axis (µm)	Y Axis (µm)
A0	Address 0	-1364.0	1589.6
A1	Address 1	-1648.4	1589.6
A2	Address 2	-1816.4	1589.6
A3	Address 3	-2013.6	1515.6
A4	Address 4	-2013.6	1337.6
A5	Address 5	-2013.6	1129.6
A6	Address 6	-2013.6	-831.2
A7	Address 7	-2013.6	-1022.0
NC	No Connect	-2013.6	-1361.6
V_{SSD}	Digital Ground	-1893.6	-1588.0
V_{SSA}	Analog Ground	-357.6	-1588.0
SP+	Speaker Output +	-17.2	-1512.8
SP-	Speaker Output -	412.4	-1512.8
V_{CCA}	Analog Power Supply	780.0	-1552.4
MIC	Microphone Input	992.0	-1590.0
MIC REF	Microphone Reference	1169.2	-1590.0
AGC	Automatic Gain Control	1978.4	-1590.0
ANA IN	Analog Input	2005.6	-1196.4
ANA OUT	Analog Output	1991.2	-995.2
$\overline{\text{PLAYL}}$	Level-Activated Playback	2014.4	1224.4
$\overline{\text{PLAYE}}$	Edge-Activated Playback	2014.4	1392.8
$\overline{\text{RECLED}}$	Record LED Output	2012.4	1587.6
XCLK	External Clock	1581.5	1589.6
$\overline{\text{REC}}$	Record	752.8	1589.6
V_{CCD}	Digital Power Supply	-48.0	1545.2

13. ORDERING INFORMATION

Product Number Descriptor Key

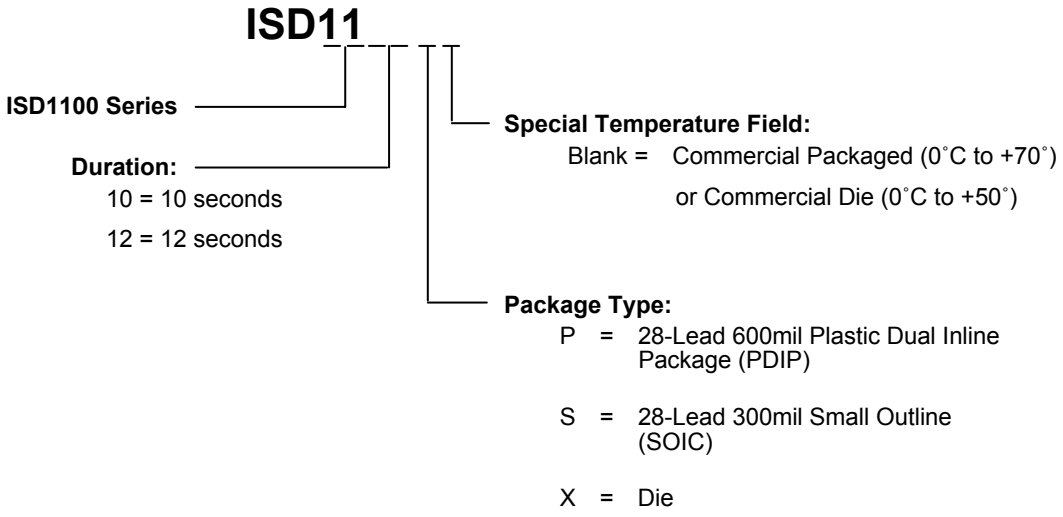

When ordering ISD1100 series devices, please refer to the following valid part numbers.

Die / Package	10-Second		12-Second	
	Product P/N	Ordering P/N	Product P/N	Ordering P/N
Die	ISD1110X	I1110X	ISD1112X	I1112X
PDIP	ISD1110P	I1110P	ISD1112P	I1112P
SOIC	ISD1110S	I1110S	ISD1112S	I1112S

For the latest product information, access Winbond's worldwide website at http://www.winbond-usa.com

14. VERSION HISTORY

VERSION	DATE	DESCRIPTION
0	Before 2004	Initial issue
1.0	March 2004	Reformat the document. Add footnote to Filter Passband in Tables 1, 8 & 10. Revise Functional Description Example section. Revise die info. Revise ordering information.
1.1	Apr 2005	Revise the disclaim section.

Winbond products are not designed, intended, authorized or warranted for use as components in systems or equipment intended for surgical implantation, atomic energy control instruments, airplane or spaceship instruments, transportation instruments, traffic signal instruments, combustion control instruments, or for other applications intended to support or sustain life. Furthermore, Winbond products are not intended for applications wherein failure of Winbond products could result or lead to a situation wherein personal injury, death or severe property or environmental damage could occur.

Winbond customers using or selling these products for use in such applications do so at their own risk and agree to fully indemnify Winbond for any damages resulting from such improper use or sales.

The contents of this document are provided only as a guide for the applications of Winbond products. Winbond makes no representation or warranties with respect to the accuracy or completeness of the contents of this publication and reserves the right to discontinue or make changes to specifications and product descriptions at any time without notice. No license, whether express or implied, to any intellectual property or other right of Winbond or others is granted by this publication. Except as set forth in Winbond's Standard Terms and Conditions of Sale, Winbond assumes no liability whatsoever and disclaims any express or implied warranty of merchantability, fitness for a particular purpose or infringement of any Intellectual property.

The contents of this document are provided "AS IS", and Winbond assumes no liability whatsoever and disclaims any express or implied warranty of merchantability, fitness for a particular purpose or infringement of any Intellectual property. In no event, shall Winbond be liable for any damages whatsoever (including, without limitation, damages for loss of profits, business interruption, loss of information) arising out of the use of or inability to use the contents of this documents, even if Winbond has been advised of the possibility of such damages.

Application examples and alternative uses of any integrated circuit contained in this publication are for illustration only and Winbond makes no representation or warranty that such applications shall be suitable for the use specified.

The 100-year retention and 100K record cycle projections are based upon accelerated reliability tests, as published in the Winbond Reliability Report, and are neither warranted nor guaranteed by Winbond. This product incorporates SuperFlash®.

Information contained in this ISD® ChipCorder® datasheet supersedes all data for the ISD ChipCorder products published by ISD® prior to August, 1998.

This datasheet and any future addendum to this datasheet is(are) the complete and controlling ISD® ChipCorder® product specifications. In the event any inconsistencies exist between the information in this and other product documentation, or in the event that other product documentation contains information in addition to the information in this, the information contained herein supersedes and governs such other information in its entirety. This datasheet is subject to change without notice.

Copyright© 2005, Winbond Electronics Corporation. All rights reserved. ChipCorder® and ISD® are trademarks of Winbond Electronics Corporation. SuperFlash® is the trademark of Silicon Storage Technology, Inc. All other trademarks are properties of their respective owners.

Headquarters
No. 4, Creation Rd. III
Science-Based Industrial Park,
Hsinchu, Taiwan
TEL: 886-3-5770066
FAX: 886-3-5665577
http://www.winbond.com.tw/

Winbond Electronics Corporation America
2727 North First Street, San Jose,
CA 95134, U.S.A.
TEL: 1-408-9436666
FAX: 1-408-5441797
http://www.winbond-usa.com/

Winbond Electronics (Shanghai) Ltd.
27F, 299 Yan An W. Rd. Shanghai,
200336 China
TEL: 86-21-62365999
FAX: 86-21-62356998

Taipei Office
9F, No. 480, Pueiguang Rd.
Neihu District
Taipei, 114 Taiwan
TEL: 886-2-81777168
FAX: 886-2-87153579

Winbond Electronics Corporation Japan
7F Daini-ueno BLDG. 3-7-18
Shinyokohama Kohokuku,
Yokohama, 222-0033
TEL: 81-45-4781881
FAX: 81-45-4781800

Winbond Electronics (H.K.) Ltd.
Unit 9-15, 22F, Millennium City,
No. 378 Kwun Tong Rd.,
Kowloon, Hong Kong
TEL: 852-27513100
FAX: 852-27552064

Please note that all data and specifications are subject to change without notice.
All the trademarks of products and companies mentioned in this datasheet belong to their respective owners.
This product incorporates SuperFlash® technology licensed From SST.

НИОКР СИСТЕМС

ООО «НИОКРсистемс» - это оперативные поставки широкого спектра электронных компонентов отечественного и импортного производства напрямую от производителей и с крупнейших мировых складов. Реализуемая нашей компанией продукция насчитывает более полумиллиона наименований.

Благодаря этому наша компания предлагает к поставке практически не ограниченный ассортимент компонентов как оптовыми, мелкооптовыми партиями, так и в розницу.

Благодаря развитой сети поставщиков, помогаем в поиске и приобретении экзотичных или снятых с производства компонентов.

Наша компания это:

- Гарантия качества поставляемой продукции
- Широкий ассортимент
- Минимальные сроки поставок
- Техническая поддержка
- Подбор комплектации
- Индивидуальный подход
- Гибкое ценообразование
- Работаем по 275 ФЗ

ООО «НИОКР СИТЕМС»
Москва, 125362, Россия, ул. Вишневая, д. 9, к. 1, Блок 104 а и 104 в

Телефон: 8 (495) 268-14-82
Email: n@nsistems.ru

ИНН: 7735154786
ОГРН: 1167746717709