FAIRCHILD SEMICONDUCTOR™

April 1988
Revised September 2000

74F299
Octal Universal Shift/Storage Register with Common Parallel I/O Pins

General Description

The 74F299 is an 8-bit universal shift/storage register with 3-STATE outputs. Four modes of operation are possible: hold (store), shift left, shift right and load data. The parallel load inputs and flip-flop outputs are multiplexed to reduce the total number of package pins. Additional outputs, Q_0-Q_7, are provided to allow easy serial cascading. A separate active LOW Master Reset is used to reset the register.

Features

- Common parallel I/O for reduced pin count
- Additional serial inputs and outputs for expansion
- Four operating modes: shift left, shift right, load and store
- 3-STATE outputs for bus-oriented applications
- Guaranteed 4000V minimum ESD protection

Ordering Code:

Order Number	Package Number	Package Description
74F299SC	M20B	20-Lead Small Outline Integrated Circuit (SOIC), JEDEC MS-013, 0.300 Wide
74F299SJ	M20D	20-Lead Small Outline Package (SOP), EIAJ TYPE II, 5.3mm Wide
74F299PC	N20A	20-Lead Plastic Dual-In-Line Package (PDIP), JEDEC MS-001, 0.300 Wide

Devices also available in Tape and Reel. Specify by appending the suffix letter "X" to the ordering code.

Logic Symbols

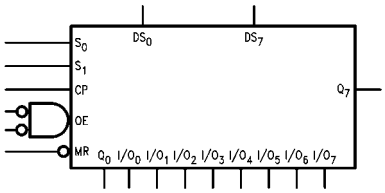

IEEE/IEC

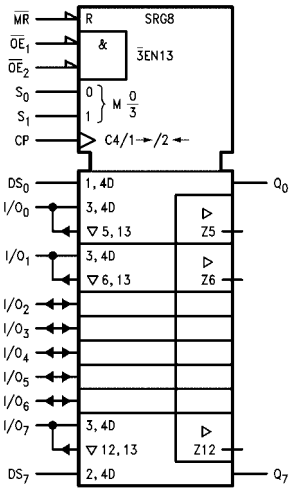

Connection Diagram

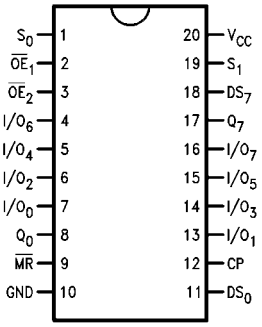

© 2000 Fairchild Semiconductor Corporation

Unit Loading/Fan Out

Pin Names	Description	U.L. HIGH/LOW	Input I_{IH}/I_{IL} Output I_{OH}/I_{OL}
CP	Clock Pulse Input (Active Rising Edge)	1.0/1.0	20 µA/–0.6 mA
DS_0	Serial Data Input for Right Shift	1.0/1.0	20 µA/–0.6 mA
DS_7	Serial Data Input for Left Shift	1.0/1.0	20 µA/–0.6 mA
S_0, S_1	Mode Select Inputs	1.0/2.0	20 µA/–1.2 mA
$\overline{MR}$	Asynchronous Master Reset Input (Active LOW)	1.0/1.0	20 µA/–0.6 mA
$\overline{OE}_1$, $\overline{OE}_2$	3-STATE Output Enable Inputs (Active LOW)	1.0/1.0	20 µA/–0.6 mA
I/O_0–I/O_7	Parallel Data Inputs or	3.5/1.083	70 µA/–0.65 mA
	3-STATE Parallel Outputs	150/40(33.3)	–3 mA/24 mA (20 mA)
Q_0, Q_7	Serial Outputs	50/33.3	–1 mA/20 mA

Functional Description

The 74F299 contains eight edge-triggered D-type flip-flops and the interstage logic necessary to perform synchronous shift left, shift right, parallel load and hold operations. The type of operation is determined by S_0 and S_1, as shown in the Mode Select Table. All flip-flop outputs are brought out through 3-STATE buffers to separate I/O pins that also serve as data inputs in the parallel load mode. Q_0 and Q_7 are also brought out on other pins for expansion in serial shifting of longer words.

A LOW signal on $\overline{MR}$ overrides the Select and CP inputs and resets the flip-flops. All other state changes are initiated by the rising edge of the clock. Inputs can change when the clock is in either state provided only that the recommended setup and hold times, relative to the rising edge of CP, are observed.

A HIGH signal on either $\overline{OE}_1$ or $\overline{OE}_2$ disables the 3-STATE buffers and puts the I/O pins in the high impedance state. In this condition the shift, hold, load and reset operations can still occur. The 3-STATE outputs are also disabled by HIGH signals on both S_0 and S_1 in preparation for a parallel load operation.

Mode Select Table

Inputs				Response
$\overline{MR}$	S_1	S_0	CP	
L	X	X	X	Asynchronous Reset; Q_0–Q_7 = LOW
H	H	H	↗	Parallel Load; $I/O_n \rightarrow Q_n$
H	L	H	↗	Shift Right; $DS_0 \rightarrow Q_0$, $Q_0 \rightarrow Q_1$, etc.
H	H	L	↗	Shift Left; $DS_7 \rightarrow Q_7$, $Q_7 \rightarrow Q_6$, etc.
H	L	L	X	Hold

H = HIGH Voltage Level
L = LOW Voltage Level
X = Immaterial
↗ = LOW-to-HIGH Clock Transition

Logic Diagram

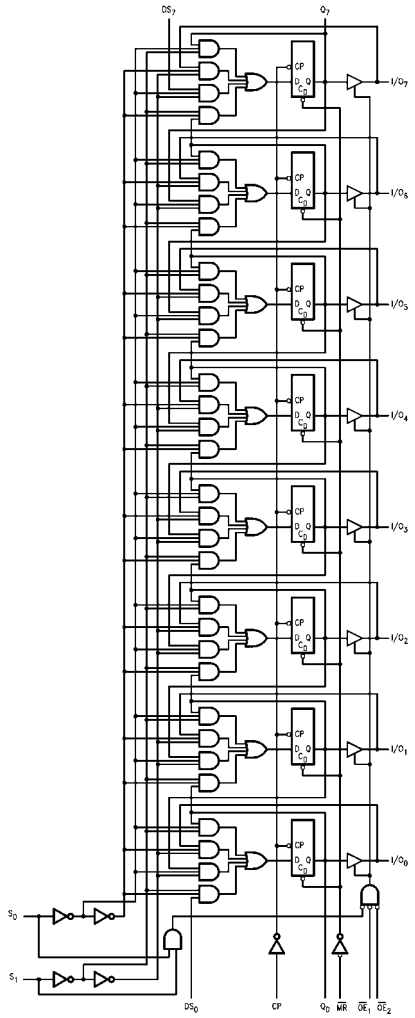

Please note that this diagram is provided only for the understanding of logic operations and should not be used to estimate propagation delays.

Absolute Maximum Ratings(Note 1)

Storage Temperature	−65°C to +150°C
Ambient Temperature under Bias	−55°C to +125°C
Junction Temperature under Bias	−55°C to +150°C
V_{CC} Pin Potential to Ground Pin	−0.5V to +7.0V
Input Voltage (Note 2)	−0.5V to +7.0V
Input Current (Note 2)	−30 mA to +5.0 mA
ESD Last Passing Voltage (Min)	4000V
Voltage Applied to Output	
in HIGH State (with V_{CC} = 0V)	
Standard Output	−0.5V to V_{CC}
3-STATE Output	
Current Applied to Output	−0.5V to +5.5V
in LOW State (Max)	twice the rated I_{OL} (mA)

Recommended Operating Conditions

Free Air Ambient Temperature	0°C to +70°C
Supply Voltage	+4.5V to +5.5V

Note 1: Absolute maximum ratings are values beyond which the device may be damaged or have its useful life impaired. Functional operation under these conditions is not implied.

Note 2: Either voltage limit or current limit is sufficient to protect inputs.

DC Electrical Characteristics

Symbol	Parameter		Min	Typ	Max	Units	V_{CC}	Conditions
V_{IH}	Input HIGH Voltage		2.0			V		Recognized as a HIGH Signal
V_{IL}	Input LOW Voltage				0.8	V		Recognized as a LOW Signal
V_{CD}	Input Clamp Diode Voltage				−1.2	V	Min	I_{IN} = −18 mA
V_{OH}	Output HIGH Voltage	10% V_{CC}	2.5			V	Min	I_{OH} = −1 mA (Q_0, Q_7, I/O_n)
		10% V_{CC}	2.4					I_{OH} = −3 mA (I/O_n)
		5% V_{CC}	2.7					I_{OH} = −1 mA (Q_0, Q_7, I/O_n)
		5% V_{CC}	2.7					I_{OH} = −3 mA (I/O_n)
V_{OL}	Output LOW Voltage	10% V_{CC}			0.5	V	Min	I_{OL} = 20 mA (Q_0, Q_7)
		10% V_{CC}			0.5			I_{OL} = 24 mA (I/O_n)
I_{IH}	Input HIGH Current				5.0	µA	Max	V_{IN} = 2.7V (CP, DS_0, DS_7, S_0, S_1, $\overline{MR}$, $\overline{OE_1}$, $\overline{OE_2}$)
I_{BVI}	Input HIGH Current Breakdown Test				7.0	µA	Max	V_{IN} = 7.0V (CP, DS_0, DS_7, S_0, S_1, $\overline{MR}$, $\overline{OE_1}$, $\overline{OE_2}$)
I_{BVIT}	Input HIGH Current Breakdown Test (I/O)				0.5	mA	Max	V_{IN} = 5.5V (I/O_n)
I_{CEX}	Output HIGH Leakage Current				50	µA	Max	V_{OUT} = V_{CC}
V_{ID}	Input Leakage Test		4.75			V	0.0	I_{ID} = 1.9 µA All Other Pins Grounded
I_{OD}	Output Leakage Circuit Current				3.75	µA	0.0	V_{IOD} = 150 mV All Other Pins Grounded
I_{IL}	Input LOW Current				−0.6	mA	Max	V_{IN} = 0.5V (CP, DS_0, DS_7, $\overline{MR}$, $\overline{OE_1}$, $\overline{OE_2}$)
					−1.2			V_{IN} = 0.5V (S_0, S_1)
I_{IH}+ I_{OZH}	Output Leakage Current				70	µA	Max	$V_{I/O}$ = 2.7V (I/O_n)
I_{IL}+ I_{OZL}	Output Leakage Current				−650	µA	Max	$V_{I/O}$ = 0.5V (I/O_n)
I_{OS}	Output Short-Circuit Current		−60		−150	mA	Max	V_{OUT} = 0V
I_{ZZ}	Bus Drainage Test				500	µA	0.0V	V_{OUT} = 5.25V
I_{CCH}	Power Supply Current			68	95	mA	Max	V_O = HIGH
I_{CCL}	Power Supply Current			68	95	mA	Max	V_O = LOW
I_{CCZ}	Power Supply Current			68	95	mA	Max	V_O = HIGH Z

AC Electrical Characteristics

Symbol	Parameter	$T_A = +25°C$ $V_{CC} = 5.0V$ $C_L = 50$ pF			$T_A = -55°C$ to $+125°C$ $V_{CC} = 5.0V$ $C_L = 50$ pF		$T_A = 0$ to $+70°C$ $V_{CC} = 5.0V$ $C_L = 50$ pF		Units
		Min	Typ	Max	Min	Max	Min	Max	
f_{MAX}	Maximum Input Frequency	70	100		85		70		MHz
t_{PLH}	Propagation Delay	4.0	7.0	8.0	4.0	9.0	4.0	8.5	ns
t_{PHL}	CP to Q_0 or Q_7	4.5	6.5	8.0	4.5	9.5	4.5	8.5	
t_{PLH}	Propagation Delay	3.5	7.0	9.0	3.5	10.0	3.5	10.0	
t_{PHL}	CP to I/O_n	4.0	8.5	9.0	4.0	11.0	4.0	10.0	
t_{PHL}	Propagation Delay $\overline{MR}$ to Q_0 or Q_7	5.5	7.5	9.5	5.5	12.5	5.5	10.5	ns
t_{PHL}	Propagation Delay $\overline{MR}$ to I/O_n	5.5	11.0	10.0	5.5	12.0	5.5	10.5	
t_{PZH}	Output Enable Time	3.5	6.0	8.0	3.0	9.5	3.5	9.0	ns
t_{PZL}	$\overline{OE}$ to I/O_n	4.0	7.0	10.0	4.0	13.0	4.0	11.0	
t_{PHZ}	Output Disable Time	2.0	4.5	6.0	1.5	7.0	2.0	7.0	
t_{PLZ}	$\overline{OE}$ to I/O_n	1.0	4.0	5.5	1.0	6.5	1.0	6.5	
t_{PZH}	Output Enable Time	3.5		9.0	3.0	10.5	3.5	10.0	ns
t_{PZL}	S_n to I/O_n	4.0		10.0	4.0	13.0	4.0	11.0	
t_{PHZ}	Output Disable Time	2.5		6.0	1.5	7.0	2.5	7.0	ns
t_{PLZ}	S_n to I/O_n	1.5		5.5	1.0	6.5	1.5	6.5	

AC Operating Requirements

Symbol	Parameter	$T_A = +25°C$ $V_{CC} = 5.0V$		$T_A = -55°C$ to $+125°C$ $V_{CC} = 5.0V$		$T_A = 0$ to $+70°C$ $V_{CC} = 5.0V$		Units
		Min	Max	Min	Max	Min	Max	
$t_S(H)$	Setup Time, HIGH or LOW	8.5		10.0		8.5		ns
$t_S(L)$	S_0 or S_1 to CP	8.5		7.5		8.5		
$t_H(H)$	Hold Time, HIGH or LOW	0		0		0		
$t_H(L)$	S_0 or S_1 to CP	0		0		0		
$t_S(H)$	Setup Time, HIGH or LOW	5.0		5.0		5.0		ns
$t_S(L)$	I/O_n, DS_0 or DS_7 to CP	5.0		5.0		5.0		
$t_H(H)$	Hold Time, HIGH or LOW	2.0		2.0		2.0		
$t_H(L)$	I/O_n, DS_0 or DS_7 to CP	2.0		2.0		2.0		
$t_W(H)$	CP Pulse Width	5.0		5.0		5.0		ns
$t_W(L)$	HIGH or LOW	5.0		5.0		5.0		
$t_W(L)$	$\overline{MR}$ Pulse Width, LOW	5.0		6.0		5.0		ns
t_{REC}	Recovery Time, $\overline{MR}$ to CP	7.0		12.0		7.0		ns

Physical Dimensions inches (millimeters) unless otherwise noted

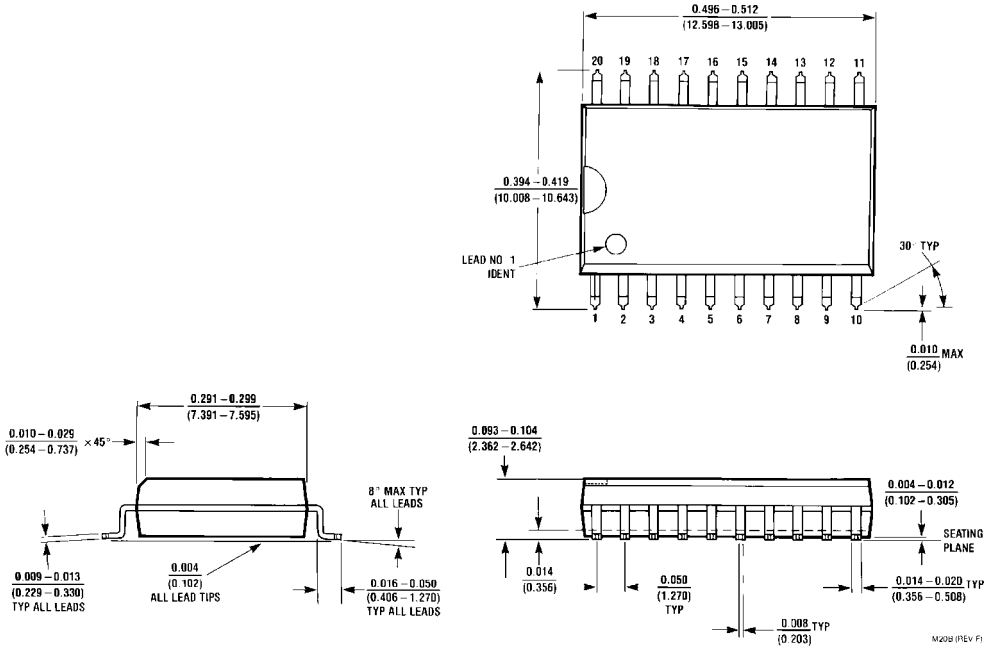

20-Lead Small Outline Integrated Circuit (SOIC), JEDEC MS-013, 0.300 Wide
Package Number M20B

Physical Dimensions inches (millimeters) unless otherwise noted (Continued)

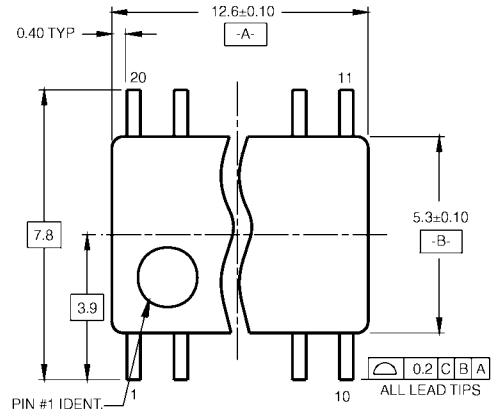

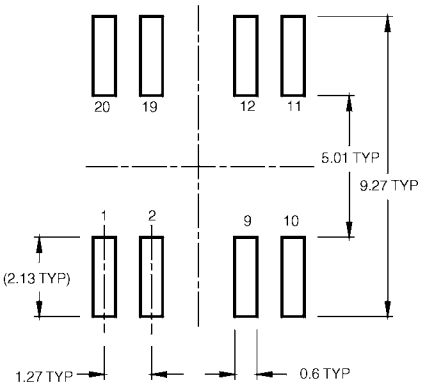

LAND PATTERN RECOMMENDATION

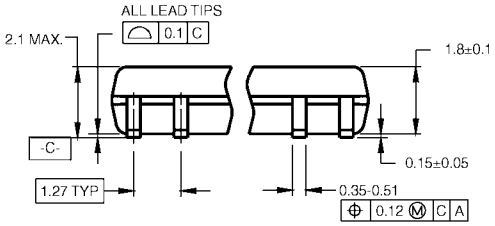

DIMENSIONS ARE IN MILLIMETERS

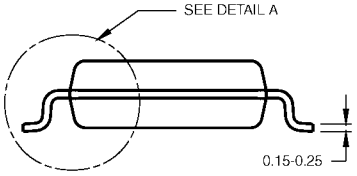

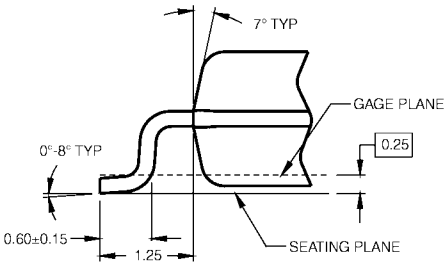

DETAIL A

NOTES:

A. CONFORMS TO EIAJ EDR-7320 REGISTRATION, ESTABLISHED IN DECEMBER, 1998.

B. DIMENSIONS ARE IN MILLIMETERS.

C. DIMENSIONS ARE EXCLUSIVE OF BURRS, MOLD FLASH, AND TIE BAR EXTRUSIONS.

M20DRevB1

20-Lead Small Outline Package (SOP), EIAJ TYPE II, 5.3mm Wide
Package Number M20D

Physical Dimensions inches (millimeters) unless otherwise noted (Continued)

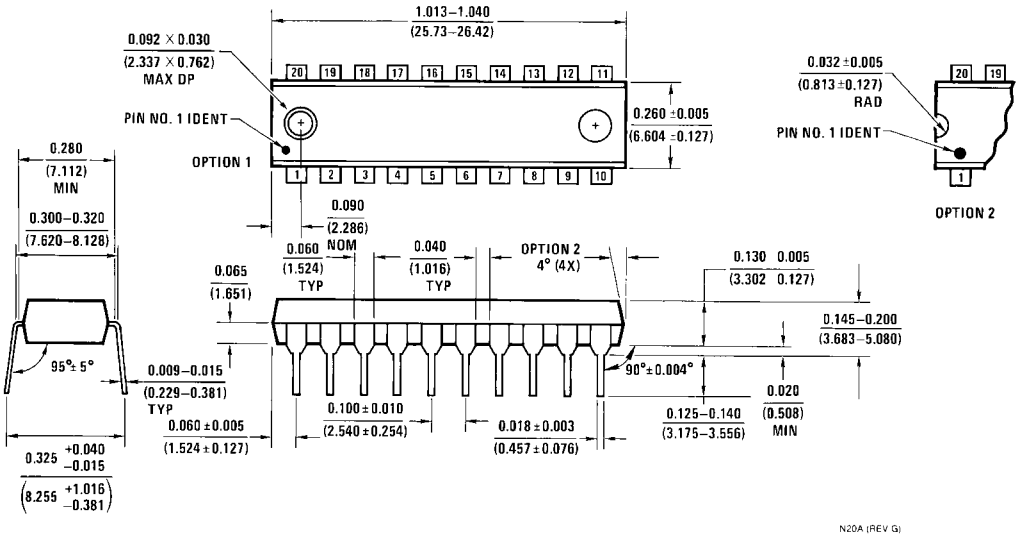

20-Lead Plastic Dual-In-Line Package (PDIP), JEDEC MS-001, 0.300 Wide
Package Number N20A

Fairchild does not assume any responsibility for use of any circuitry described, no circuit patent licenses are implied and Fairchild reserves the right at any time without notice to change said circuitry and specifications.

LIFE SUPPORT POLICY

FAIRCHILD'S PRODUCTS ARE NOT AUTHORIZED FOR USE AS CRITICAL COMPONENTS IN LIFE SUPPORT DEVICES OR SYSTEMS WITHOUT THE EXPRESS WRITTEN APPROVAL OF THE PRESIDENT OF FAIRCHILD SEMICONDUCTOR CORPORATION. As used herein:

1. Life support devices or systems are devices or systems which, (a) are intended for surgical implant into the body, or (b) support or sustain life, and (c) whose failure to perform when properly used in accordance with instructions for use provided in the labeling, can be reasonably expected to result in a significant injury to the user.
2. A critical component in any component of a life support device or system whose failure to perform can be reasonably expected to cause the failure of the life support device or system, or to affect its safety or effectiveness.

www.fairchildsemi.com

НИОКР СИСТЕМС

ООО «НИОКРсистемс» - это оперативные поставки широкого спектра электронных компонентов отечественного и импортного производства напрямую от производителей и с крупнейших мировых складов. Реализуемая нашей компанией продукция насчитывает более полумиллиона наименований.

Благодаря этому наша компания предлагает к поставке практически не ограниченный ассортимент компонентов как оптовыми, мелкооптовыми партиями, так и в розницу.

Благодаря развитой сети поставщиков, помогаем в поиске и приобретении экзотичных или снятых с производства компонентов.

Наша компания это:

- Гарантия качества поставляемой продукции
- Широкий ассортимент
- Минимальные сроки поставок
- Техническая поддержка
- Подбор комплектации
- Индивидуальный подход
- Гибкое ценообразование
- Работаем по 275 ФЗ

ООО «НИОКР СИТЕМС»
Москва, 125362, Россия, ул. Вишневая, д. 9, к. 1, Блок 104 а и 104 в

Телефон: 8 (495) 268-14-82
Email: n@nsistems.ru

ИНН: 7735154786
ОГРН: 1167746717709