DATA SHEET

83C751/87C751

80C51 8-bit microcontroller family

2K/64 OTP/ROM, I^2C, low pin count

Product specification
Supersedes data of 1998 Jan 19
IC20 Data Handbook

1998 May 01

Philips
Semiconductors

PHILIPS

80C51 8-bit microcontroller family 2K/64 OTP/ROM, I²C, low pin count

83C751/87C751

DESCRIPTION

The Philips 83C751/87C751 offers the advantages of the 80C51 architecture in a small package and at low cost.

The 8XC751 Microcontroller is fabricated with Philips high-density CMOS technology. Philips epitaxial substrate minimizes CMOS latch-up sensitivity.

The 8XC751 contains a 2k × 8 ROM (83C751) EPROM (87C751), a 64 × 8 RAM, 19 I/O lines, a 16-bit auto-reload counter/timer, a five-source, fixed-priority level interrupt structure, a bidirectional inter-integrated circuit (I^2C) serial bus interface, and an on-chip oscillator.

The on-board inter-integrated circuit (I^2C) bus interface allows the 8XC751 to operate as a master or slave device on the I^2C small area network. This capability facilitates I/O and RAM expansion, access to EEPROM, processor-to-processor communication, and efficient interface to a wide variety of dedicated I^2C peripherals.

FEATURES

- 80C51 based architecture
- Inter-Integrated Circuit (I^2C) serial bus interface
- Small package sizes
  - 24-pin DIP (300 mil “skinny DIP”)
  - 24-pin Shrink Small Outline Package
  - 28-pin PLCC
- 87C751 available in one-time programmable plastic packages
- Wide oscillator frequency range
- Low power consumption:
  - Normal operation: less than 11mA @ 5V, 12MHz
  - Idle mode
  - Power-down mode
- 2k × 8 ROM (83C751)
  2k × 8 EPROM (87C751)
- 64 × 8 RAM
- 16-bit auto reloadable counter/timer
- Fixed-rate timer
- Boolean processor
- CMOS and TTL compatible
- Well suited for logic replacement, consumer and industrial applications
- LED drive outputs

PIN CONFIGURATIONS

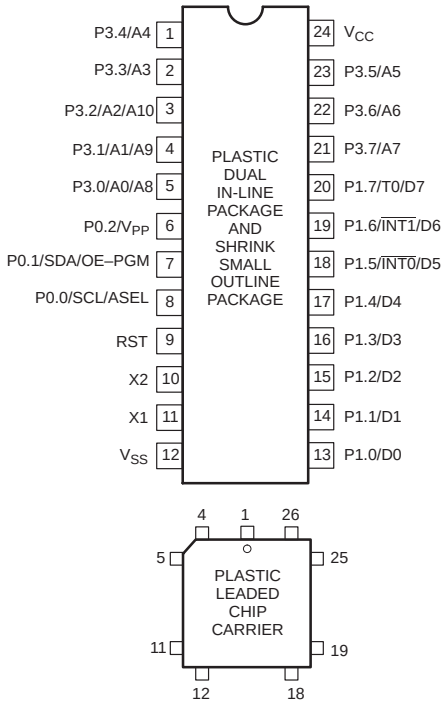

Pin	Function	Pin	Function	Pin	Function
1	P3.4/A4	10	NC*	19	P1.4/D4
2	P3.3/A3	11	RST	20	P1.5/$\overline{INT0}$/D5
3	P3.2/A2/A10	12	X2	21	NC*
4	P3.1/A1/A9	13	X1	22	NC*
5	NC*	14	V_{SS}	23	P1.6/$\overline{INT1}$/D6
6	P3.0/A0/A8	15	P1.0/D0	24	P1.7/T0/D7
7	P0.2/V_{PP}	16	P1.1/D1	25	P3.7/A7
8	P0.1/SDA/OE-PGM	17	P1.2/D2	26	P3.6/A6
9	P0.0//SCLASEL	18	P1.3/D3	27	P3.5/A5
				28	V_{CC}

* DO NOT CONNECT

SU00315

ORDERING INFORMATION

ROM	EPROM[1]		TEMPERATURE RANGE °C AND PACKAGE	FREQUENCY	DRAWING NUMBER
S83C751–1N24	S87C751–1N24	OTP	0 to +70, Plastic Dual In-line Package	3.5 to 12MHz	SOT222-1
S83C751–2N24	S87C751–2N24	OTP	–40 to +85, Plastic Dual In-line Package	3.5 to 12MHz	SOT222-1
S83C751–4N24	S87C751–4N24	OTP	0 to +70, Plastic Dual In-line Package	3.5 to 16MHz	SOT222-1
S83C751–5N24	S87C751–5N24	OTP	–40 to +85, Plastic Dual In-line Package	3.5 to 16MHz	SOT222-1
S83C751–1A28	S87C751–1A28	OTP	0 to +70, Plastic Leaded Chip Carrier	3.5 to 12MHz	SOT261-3
S83C751–2A28	S87C751–2A28	OTP	–40 to +85, Plastic Leaded Chip Carrier	3.5 to 12MHz	SOT261-3
S83C751–4A28	S87C751–4A28	OTP	0 to +70, Plastic Leaded Chip Carrier	3.5 to 16MHz	SOT261-3
S83C751–5A28	S87C751–5A28	OTP	–40 to +85, Plastic Leaded Chip Carrier	3.5 to 16MHz	SOT261-3
S83C751–1DB	S87C751–1DB	OTP	0 to +70, Shrink Small Outline Package	3.5 to 12MHz	SOT340-1
S83C751–4DB	S87C751–4DB	OTP	0 to +70, Shrink Small Outline Package	3.5 to 16MHz	SOT340-1

NOTE:
1. OTP = One Time Programmable EPROM.

BLOCK DIAGRAM

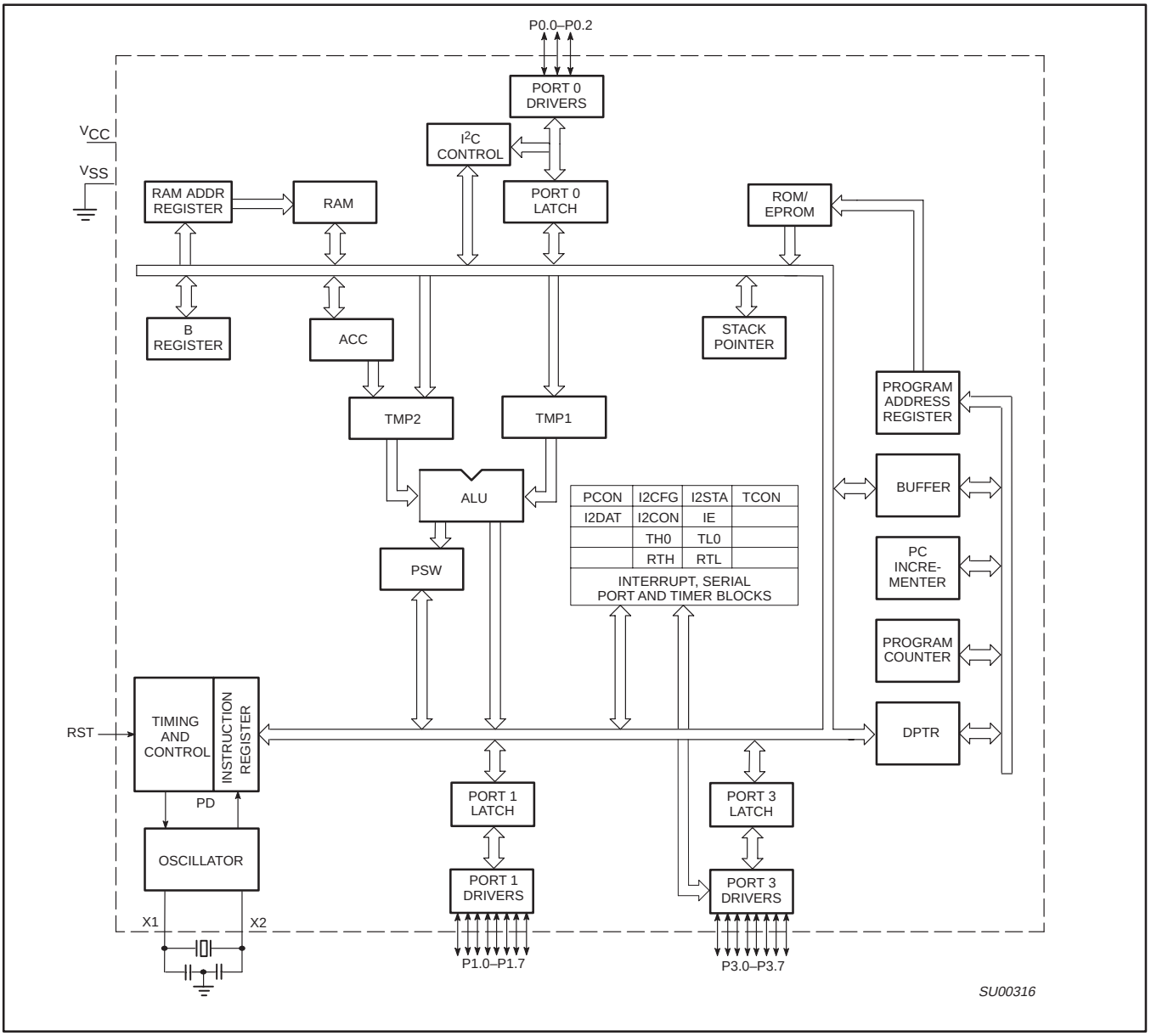

PIN DESCRIPTIONS

MNEMONIC	PIN NO. DIP/ SSOP	PIN NO. LCC	TYPE	NAME AND FUNCTION
V_{SS}	12	14	I	**Circuit Ground Potential**
V_{CC}	24	28	I	**Supply voltage during normal, idle, and power-down operation.**
P0.0–P0.2	8–6	9–7	I/O	**Port 0:** Port 0 is a 3-bit open-drain, bidirectional port. Port 0 pins that have 1s written to them float, and in that state can be used as high-impedance inputs. Port 0 also serves as the serial I²C interface. When this feature is activated by software, SCL and SDA are driven low in accordance with the I²C protocol. These pins are driven low if the port register bit is written with a 0 or if the I²C subsystem presents a 0. The state of the pin can always be read from the port register by the program. To comply with the I²C specification, P0.0 and P0.1 are open drain bidirectional I/O pins with the electrical characteristics listed in the tables that follow. While these differ from “standard TTL” characteristics, they are close enough for the pins to still be used as general-purpose I/O in non-I²C applications. Port 0 also provides alternate functions for programming the EPROM memory as follows:
	6	7	N/A	**V_{PP} (P0.2) –** Programming voltage input. (See Note 1.)
	7	8	I	**OE/PGM (P0.1) –** Input which specifies verify mode (output enable) or the program mode. OE/PGM = 1 output enabled (verify mode). OE/PGM = 0 program mode.
	8	9	I	**ASEL (P0.0) –** Input which indicates which bits of the EPROM address are applied to port 3. ASEL = 0 low address byte available on port 3. ASEL = 1 high address byte available on port 3 (only the three least significant bits are used).
	7	8	I/O	**SDA (P0.1) –** I²C data.
	8	9	I/O	**SCL (P0.0) –** I²C clock.
P1.0–P1.7	13–20	15–20, 23, 24	I/O	**Port 1:** Port 1 is an 8-bit bidirectional I/O port with internal pull-ups. Port 1 pins that have 1s written to them are pulled high by the internal pull-ups and can be used as inputs. As inputs, port 1 pins that are externally pulled low will source current because of the internal pull-ups. (See DC Electrical Characteristics: I_{IL}). Port 1 serves to output the addressed EPROM contents in the verify mode and accepts as inputs the value to program into the selected address during the program mode. Port 1 also serves the special function features of the 80C51 family as listed below:
	18	20	I	**$\overline{INT0}$ (P1.5):** External interrupt.
	19	23	I	**$\overline{INT1}$ (P1.6):** External interrupt.
	20	24	I	**T0 (P1.7):** Timer 0 external input.
P3.0–P3.7	5–1, 23–21	6, 4–1, 27–25	I/O	**Port 3:** Port 3 is an 8-bit bidirectional I/O port with internal pull-ups. Port 3 pins that have 1s written to them are pulled high by the internal pull-ups and can be used as inputs. As inputs, port 3 pins that are externally being pulled low will source current because of the pull-ups. (See DC Electrical Characteristics: I_{IL}). Port 3 also functions as the address input for the EPROM memory location to be programmed (or verified). The 11-bit address is multiplexed into this port as specified by P0.0/ASEL.
RST	9	11	I	**Reset:** A high on this pin for two machine cycles while the oscillator is running, resets the device. An internal diffused resistor to V_{SS} permits a power-on RESET using only an external capacitor to V_{CC}. After the device is reset, a 10-bit serial sequence, sent LSB first, applied to RESET, places the device in the programming state allowing programming address, data and V_{PP} to be applied for programming or verification purposes. The RESET serial sequence must be synchronized with the X1 input.
X1	11	13	I	**Crystal 1:** Input to the inverting oscillator amplifier and input to the internal clock generator circuits. X1 also serves as the clock to strobe in a serial bit stream into RESET to place the device in the programming state.
X2	10	12	O	**Crystal 2:** Output from the inverting oscillator amplifier.

NOTE:
1. When P0.2 is at or close to 0V it may affect the internal ROM operation. We recommend that P0.2 be tied to V_{CC} via a small pullup (e.g., 2kΩ).

ABSOLUTE MAXIMUM RATINGS[1, 2]

PARAMETER	RATING	UNIT
Storage temperature range	–65 to +150	°C
Voltage from V_{CC} to V_{SS}	–0.5 to +6.5	V
Voltage from any pin to V_{SS} (except V_{PP})	–0.5 to V_{CC} + 0.5	V
Power dissipation	1.0	W
Voltage on V_{PP} pin to V_{SS}	0 to +13.0	V
Maximum I_{OL} per I/O pin	10	mA

NOTES:
1. Stresses above those listed under Absolute Maximum Ratings may cause permanent damage to the device. This is a stress rating only and functional operation of the device at these or any conditions other than those described in the AC and DC Electrical Characteristics section of this specification is not implied.
2. This product includes circuitry specifically designed for the protection of its internal devices from the damaging effects of excessive static charge. Nonetheless, it is suggested that conventional precautions be taken to avoid applying greater than the rated maxima.

DC ELECTRICAL CHARACTERISTICS

T_{amb} = 0°C to +70°C or –40°C to +85°C, V_{CC} = 5V ±10% for 87C751, V_{CC} = 5V ±10% for 83C751, V_{SS} = 0V[1]

SYMBOL	PARAMETER	TEST CONDITIONS	LIMITS		UNIT
			MIN	MAX	
V_{IL} V_{IH} V_{IH1}	Input low voltage, except SDA, SCL Input high voltage, except X1, RST Input high voltage, X1, RST		–0.5 $0.2V_{CC}$+0.9 $0.7V_{CC}$	$0.2V_{DD}$–0.1 V_{CC}+0.5 V_{CC}+0.5	V V V
 V_{IL1} V_{IH2}	SDA, SCL, P0.2 Input low voltage Input high voltage		 –0.5 $0.7V_{CC}$	 $0.3V_{CC}$ V_{CC}+0.5	 V V
V_{OL} V_{OL1}	Output low voltage, ports 1 and 3 Output low voltage, port 0.2	I_{OL} = 1.6mA[2] I_{OL} = 3.2mA[2]		0.45 0.45	V V
V_{OH}	Output high voltage, ports 1 and 3	I_{OH} = –60µA I_{OH} = –25µA I_{OH} = –10µA	2.4 $0.75V_{CC}$ $0.9V_{CC}$		V V V
 V_{OL2} C	Port 0.0 and 0.1 (I²C) – Drivers Output low voltage Driver, receiver combined: Capacitance	 I_{OL} = 3mA (over V_{CC} range)		 0.4 10	 V pF
I_{IL} I_{TL} I_{LI}	Logical 0 input current, ports 1 and 3 Logical 1 to 0 transition current, ports 1 and 3[3] Input leakage current, port 0	V_{IN} = 0.45V V_{IN} = 2V (0 to 70°C) V_{IN} = 2V (–40 to +85°C) 0.45 < V_{IN} < V_{CC}		–50 –650 –750 ±10	µA µA µA µA
R_{RST}	Internal pull-down resistor		25	175	kΩ
C_{IO}	Pin capacitance	Test freq = 1MHz, T_{amb} = 25°C		10	pF
I_{PD}	Power-down current[4]	V_{CC} = 2 to V_{CC} max		50	µA
V_{PP}	V_{PP} program voltage (for 87C751 only)	V_{SS} = 0V V_{CC} = 5V±10% T_{amb} = 21°C to 27°C	12.5	13.0	V
I_{PP}	Program current (for 87C751 only)	V_{PP} = 13.0V		50	mA
I_{CC}	Supply current (see Figure 2)				

NOTES TO DC ELECTRICAL CHARACTERISTICS ON NEXT PAGE.

NOTES TO DC ELECTRICAL CHARACTERISTICS:

1. Parameters are valid over operating temperature range unless otherwise specified. All voltages are with respect to V_{SS} unless otherwise noted.
2. Under steady state (non-transient) conditions, I_{OL} must be externally limited as follows:
   Maximum I_{OL} per port pin: 10mA (NOTE: This is 85°C spec.)
   Maximum I_{OL} per 8-bit port: 26mA
   Maximum total I_{OL} for all outputs: 67mA
   If I_{OL} exceeds the test condition, V_{OL} may exceed the related specification. Pins are not guaranteed to sink current greater than the listed test conditions.
3. Pins of ports 1 and 3 source a transition current when they are being externally driven from 1 to 0. The transition current reaches its maximum value when V_{IN} is approximately 2V.
4. Power-down I_{CC} is measured with all output pins disconnected; port 0 = V_{CC}; X2, X1 n.c.; RST = V_{SS}.
5. Active I_{CC} is measured with all output pins disconnected; X1 driven with t_{CLCH}, t_{CHCL} = 5ns, V_{IL} = V_{SS} + 0.5V, V_{IH} = V_{CC} – 0.5V; X2 n.c.; RST = port 0 = V_{CC}. I_{CC} will be slightly higher if a crystal oscillator is used.
6. Idle I_{CC} is measured with all output pins disconnected; X1 driven with t_{CLCH}, t_{CHCL} = 5ns, V_{IL} = V_{SS} + 0.5V, V_{IH} = V_{CC} – 0.5V; X2 n.c.; port 0 = V_{CC}; RST = V_{SS}.

AC ELECTRICAL CHARACTERISTICS

T_{amb} = 0°C to +70°C or –40°C to +85°C, V_{CC} = 5V ±10% for 87C751, V_{CC} = 5V ±10% for 83C751, V_{SS} = 0V[1, 2]

SYMBOL	PARAMETER	12MHz CLOCK		VARIABLE CLOCK		UNIT
		MIN	MAX	MIN	MAX	
$1/t_{CLCL}$	Oscillator frequency:			3.5 3.5	12 16	MHz MHz
External Clock (Figure 1)						
t_{CHCX}	High time	20		20		ns
t_{CLCX}	Low time	20		20		ns
t_{CLCH}	Rise time		20		20	ns
t_{CHCL}	Fall time		20		20	ns

NOTES:

1. Parameters are valid over operating temperature range unless otherwise specified. All voltages are with respect to V_{SS} unless otherwise noted.
2. Load capacitance for ports = 80pF.

EXPLANATION OF THE AC SYMBOLS

Each timing symbol has five characters. The first character is always 't' (= time). The other characters, depending on their positions, indicate the name of a signal or the logical status of that signal. The designations are:

- C – Clock
- D – Input data
- H – Logic level high
- L – Logic level low
- Q – Output data
- T – Time
- V – Valid
- X – No longer a valid logic level
- Z – Float

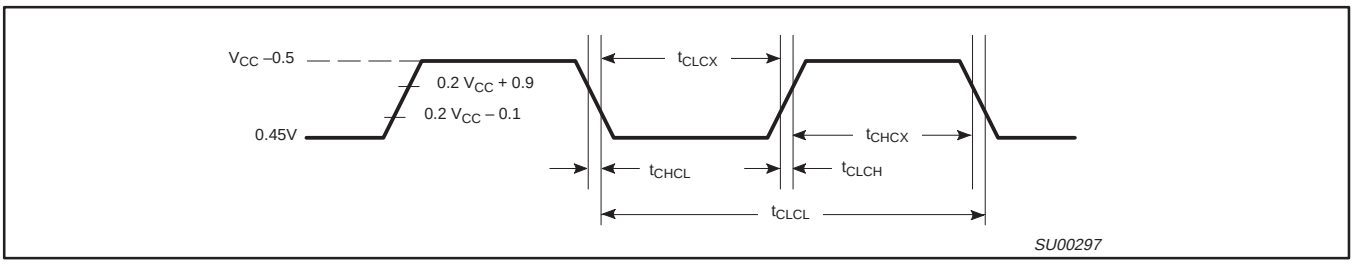

Figure 1. External Clock Drive

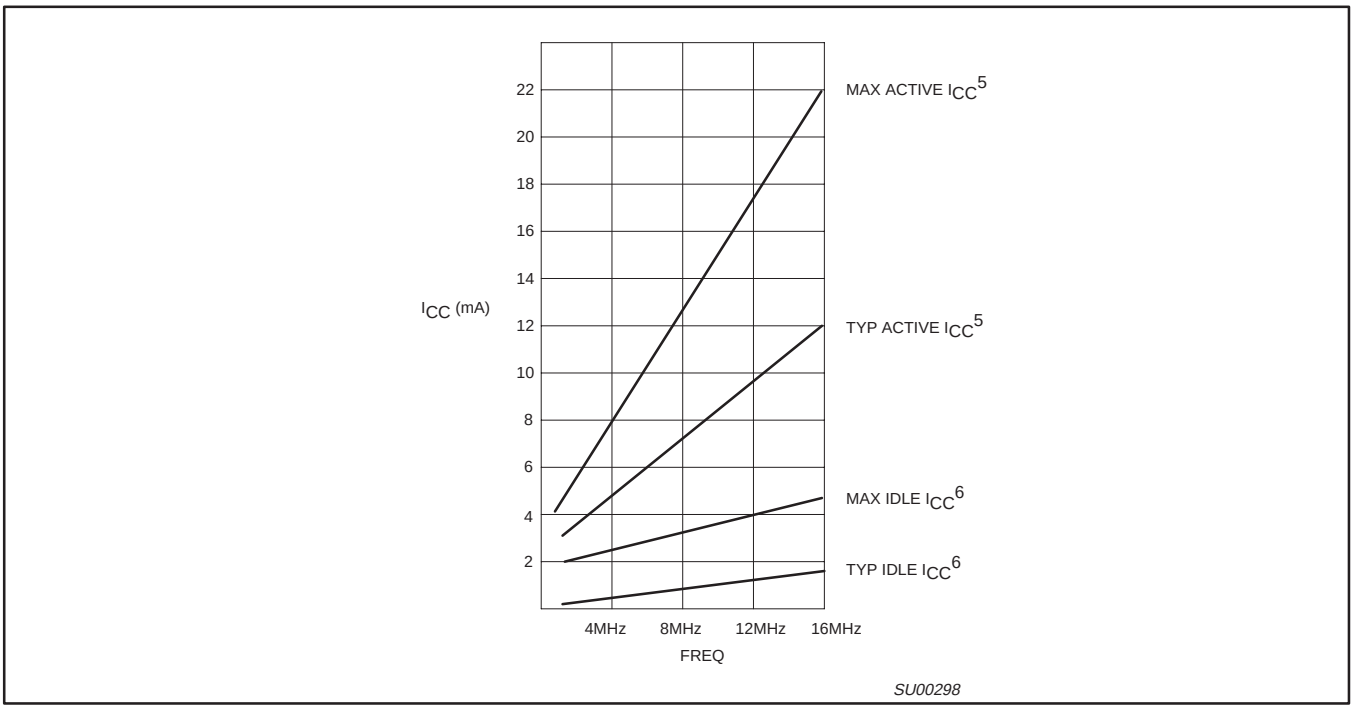

Figure 2. I_{CC} vs. FREQ
Maximum I_{CC} values taken at V_{CC} max and worst case temperature.
Typical I_{CC} values taken at V_{CC} = 5.0V and 25°C.
Notes 5 and 6 refer to DC Electrical Characteristics.

OSCILLATOR CHARACTERISTICS

X1 and X2 are the input and output, respectively, of an inverting amplifier which can be configured for use as an on-chip oscillator.

To drive the device from an external clock source, X1 should be driven while X2 is left unconnected. There are no requirements on the duty cycle of the external clock signal, because the input to the internal clock circuitry is through a divide-by-two flip-flop. However, minimum and maximum high and low times specified in the data sheet must be observed.

RESET

A reset is accomplished by holding the RST pin high for at least two machine cycles (24 oscillator periods), while the oscillator is running. To insure a good power-up reset, the RST pin must be high long enough to allow the oscillator time to start up (normally a few milliseconds) plus two machine cycles. At power-up, the voltage on V_{CC} and RST must come up at the same time for a proper start-up.

IDLE MODE

In idle mode, the CPU puts itself to sleep while all of the on-chip peripherals stay active. The instruction to invoke the idle mode is the last instruction executed in the normal operating mode before the idle mode is activated. The CPU contents, the on-chip RAM, and all of the special function registers remain intact during this mode. The idle mode can be terminated either by any enabled interrupt (at which time the process is picked up at the interrupt service routine and continued), or by a hardware reset which starts the processor in the same manner as a power-on reset.

POWER-DOWN MODE

In the power-down mode, the oscillator is stopped and the instruction to invoke power-down is the last instruction executed. Only the contents of the on-chip RAM are preserved. A hardware reset is the only way to terminate the power-down mode. the control bits for the reduced power modes are in the special function register PCON.

Table 1. External Pin Status During Idle and Power-Down Modes

MODE	Port 0	Port 1	Port 2
Idle	Data	Data	Data
Power-down	Data	Data	Data

DIFFERENCES BETWEEN THE 8XC751 AND THE 80C51

Memory Organization

The central processing unit (CPU) manipulates operands in two address spaces as shown in Figure 3. The part's internal memory space consists of 2k bytes of program memory, and 64 bytes of data RAM overlapped with the 128-byte special function register area. The differences from the 80C51 are in RAM size (64 bytes vs. 128 bytes), in external RAM access (not available on the 83C751), in internal ROM size (2k bytes vs. 4k bytes), and in external program memory expansion (not available on the 83C751). The 128-byte special function register (SFR) space is accessed as on the 80C51 with some of the registers having been changed to reflect changes in the 83C751 peripheral functions. The stack may be located anywhere in internal RAM by loading the 8-bit stack pointer (SP). It should be noted that stack depth is limited to 64 bytes, the amount of available RAM. A reset loads the stack pointer with 07 (which is pre-incremented on a PUSH instruction).

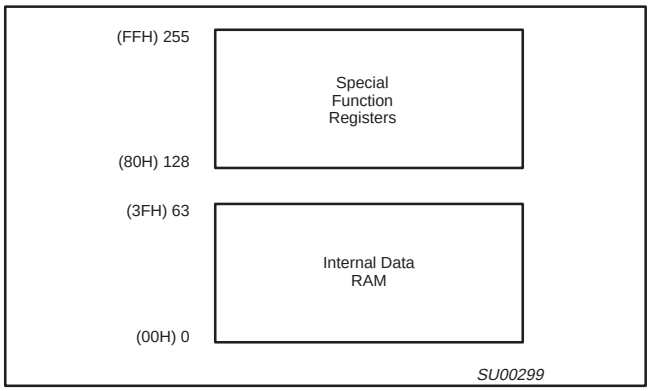

Figure 3. Memory Map

Program Memory

On the 8XC751, program memory is 2048 bytes long and is not externally expandable, so the 80C51 instructions MOVX, LJMP, and LCALL are not implemented. The only fixed locations in program memory are the addresses at which execution is taken up in response to reset and interrupts, which are as follows:

Event	Program Memory Address
Reset	000
External $\overline{INT0}$	003
Counter/timer 0	00B
External $\overline{INT1}$	013
Timer I	01B
I²C serial	023

Counter/Timer Subsystem

The 8XC751 has one counter/timer called timer/counter 0. Its operation is similar to mode 2 operation on the 80C51, but is extended to 16 bits with 16 bits of autoload. The controls for this counter are centralized in a single register called TCON.

A watchdog timer, called Timer I, is for use with the I²C subsystem. In I²C applications, this timer is dedicated to time-generation and bus monitoring of the I²C. In non-I²C applications, it is available for use as a fixed time-base.

Counter Timer – Special Function Register

The counter/timer has only one mode of operation, so the TMOD SFR is not used. There is also only one counter/timer, so there is no need for the TL1 and TH1 SFRs found on the 80C51. These have been replaced on the 83C751 by RTL and RTH, the counter/timer reload registers. Table 3 shows the special function registers, their locations, and reset values.

Interrupt Subsystem – Fixed Priority

The IP register and the 2-level interrupt system of the 80C51 are eliminated. Simultaneous interrupt conditions are resolved by a single-level, fixed priority as follows:

Highest priority:	Pin $\overline{INT0}$
	Counter/timer flag 0
	Pin $\overline{INT1}$
	Timer I
Lowest priority:	Serial I²C

Special Function Register – Interrupt Subsystem

Because the interrupt structure is single level on the 83C751, there is no need for the IP SFR, so it is not used.

Serial Communications

The 8XC751 contains an I^{2}C serial communications port instead of the 80C51 UART. The I^{2}C serial port is a single bit hardware interface with all of the hardware necessary to support multimaster and slave operations. Also included are receiver digital filters and timer (timer I) for communication watch-dog purposes. The I^{2}C serial port is controlled through four special function registers; I^{2}C control, I^{2}C data, I^{2}C status, and I^{2}C configuration.

Special Function Register – Serial Communications

The 83C751 contains many of the special function registers (SFR) that are found on the 80C51. Due to the different peripheral features on the 83C751, there are several additional SFRs and several that have been changed.

Since the standard UART found on the 80C51 has been replaced by the I^{2}C serial interface, the UART SFRs, SCON, and SBUF have been replaced by I2CON and I2DAT, and two additional I^{2}C registers have been added (I2STA and I2CFG).

I/O Port Latches (P0, P1, P3)

The port latches function the same as those on the 80C51. Since there is no port 2 on the 83C751, the P2 latch is not used. Port 0 on the 83C751 has only 3 bits, so only 3 bits of the P0 SFR have a useful function.

Special Function Register – I/O Port Latches

There is no Port2 on the 8XC751, so P2 is not used. Also, only 3 bits of P0 SFR have a useful function.

Data Pointer (DPTR)

The data pointer (DPTR) consists of a high byte (DPH) and a low byte (DPL). In the 80C51 this register allows the access of external data memory using the MOVX instruction. Since the 83C751 does not support MOVX or external memory accesses, this register is generally used as a 16-bit offset pointer of the accumulator in a MOVC instruction. DPTR may also be manipulated as two independent 8-bit registers.

Table 2. I^{2}C Special Function Register Addresses

REGISTER ADDRESS			BIT ADDRESS							
NAME	SYMBOL	ADDRESS	MSB							LSB
I^{2}C control	I2CON	98	9F	9E	9D	9C	9B	9A	99	98
I^{2}C data	I2DAT	99	–	–	–	–	–	–	–	–
I^{2}C configuration	I2CFG	D8	DF	DE	DD	DC	DB	DA	D9	D8
I^{2}C status	I2STA	F8	FF	FE	FD	FC	FB	FA	F9	F8

ROM CODE SUBMISSION

When submitting ROM code for the 80C751, the following must be specified:

1. 2k byte user ROM data

ADDRESS	CONTENT	BIT(S)	COMMENT
0000H to 07FFH	DATA	7:0	User ROM Data

Table 3. 8XC751 Special Function Registers

SYMBOL	DESCRIPTION	DIRECT ADDRESS	BIT ADDRESS, SYMBOL, OR ALTERNATIVE PORT FUNCTION MSB							LSB	RESET VALUE
ACC*	Accumulator	E0H	E7	E6	E5	E4	E3	E2	E1	E0	00H
B*	B register	F0H	F7	F6	F5	F4	F3	F2	F1	F0	00H
DPTR:	Data pointer (2 bytes)										
DPH	High byte	83H									00H
DPL	Low byte	82H									00H
			DF	DE	DD	DC	DB	DA	D9	D8	
I²CFG*#	I²C configuration	D8H/RD	SLAVEN	MASTRQ	0	TIRUN	–	–	CT1	CT0	0000xx00B
		WR	SLAVEN	MASTRQ	CLRTI	TIRUN	–	–	CT1	CT0	
			9F	9E	9D	9C	9B	9A	99	98	
I²CON*#	I²C control	98H/RD	RDAT	ATN	DRDY	ARL	STR	STP	MASTER	–	81H
		WR	CXA	IDLE	CDR	CARL	CSTR	CSTP	XSTR	XSTP	
I²DAT#	I²C data	99H/RD	RDAT	0	0	0	0	0	0	0	80H
		WR	XDAT	X	X	X	X	X	X	X	
			FF	FE	FD	FC	FB	FA	F9	F8	
I²STA*#	I²C status	F8H	–	IDLE	XDATA	XACTV	MAKSTR	MAKSTP	XSTR	XSTP	x0100000B
			AF	AE	AD	AC	AB	AA	A9	A8	
IE*#	Interrupt enable	ABH	EA	–	–	EI2	ET1	EX1	ET0	EX0	00H
								82	81	80	
P0*#	Port 0	80H	–	–	–	–	–	–	SDA	SCL	xxxxx111B
			97	96	95	94	93	92	91	90	
P1*	Port 1	90H	T0	$\overline{INT1}$	$\overline{INT0}$	–	–	–	–	–	FFH
P3*	Port 3	B0H	B7	B6	B5	B4	B3	B2	B1	B0	FFH
PCON#	Power control	87H	–	–	–	–	–	–	PD	IDL	xxxxxx00B
			D7	D6	D5	D4	D3	D2	D1	D0	
PSW*	Program status word	D0H	CY	AC	F0	RS1	RS0	OV	–	P	00H
SP	Stack pointer	81H									07H
			8F	8E	8D	8C	8B	8A	89	88	
TCON*#	Timer/counter control	88H	GATE	C/T	TF	TR	IE0	IT0	IE1	IT1	00H
TL#	Timer low byte	8AH									00H
TH#	Timer high byte	8CH									00H
RTL#	Timer low reload	8BH									00H
RTH#	Timer high reload	8DH									00H

* SFRs are bit addressable.
\# SFRs are modified from or added to the 80C51 SFRs.

I/O Port Structure

The 8XC751 has two 8-bit ports (ports 1 and 3) and one 3-bit port (port 0). All three ports on the 8XC751 are bidirectional. Each consists of a latch (special function register P0, P1, P3), an output driver, and an input buffer. Three port 1 pins and two port 0 pins are multifunctional. In addition to being port pins, these pins serve the function of special features as follows:

Port Pin	Alternate Function
P0.0	**I^2C clock (SCL)**
P0.1	**I^2C data (SDA)**
P1.5	**INT0 (external interrupt 0 input)**
P1.6	**INT1 (external interrupt 1 input)**
P1.7	**T0 (timer 0 external input)**

Ports 1 and 3 are identical in structure to the same ports on the 80C51. The structure of port 0 on the 8XC751 is similar to that of the 80C51 but does not include address/data input and output circuitry. As on the 80C51, ports 1 and 3 are quasi-bidirectional while port 0 is bidirectional with no internal pullups.

Timer/Counter

The 8XC751 has two timers: a 16-bit timer/counter and a 10-bit fixed-rate timer. The 16-bit timer/counter's operation is similar to mode 2 operation on the 80C51, but is extended to 16 bits. The timer/counter is clocked by either 1/12 the oscillator frequency or by transitions on the T0 pin. The C/T pin in special function register TCON selects between these two modes. When the TCON TR bit is set, the timer/counter is enabled. Register pair TH and TL are incremented by the clock source. When the register pair overflows, the register pair is reloaded with the values in registers RTH and RTL. The value in the reload registers is left unchanged. See the 83C751 counter/timer block diagram in Figure 4. The TF bit in special function register TCON is set on counter overflow and, if the interrupt is enabled, will generate an interrupt.

TCON Register

MSB							LSB
GATE	C/T	TF	TR	IE0	IT0	IE1	IT1

GATE	1	–	Timer/counter is enabled only when INT0 pin is high, and TR is 1.
	0	–	Timer/counter is enabled when TR is 1.
C/T	1	–	Counter/timer operation from T0 pin.
	0	–	Timer operation from internal clock.
TF	1	–	Set on overflow of TH.
	0	–	Cleared when processor vectors to interrupt routine and by reset.
TR	1	–	Timer/counter enabled.
	0	–	Timer/counter disabled.
IE0	1	–	Edge detected in $\overline{INT0}$.
IT0	1	–	$\overline{INT0}$ is edge triggered.
	0	–	$\overline{INT0}$ is level sensitive.
IE1	1	–	Edge detected on $\overline{INT1}$.
IT1	1	–	$\overline{INT1}$ is edge triggered.
	0	–	$\overline{INT1}$ is level sensitive.

These flags are functionally identical to the corresponding 80C51 flags, except that there is only one timer on the 83C751 and the flags are therefore combined into one register.

Note that the positions of the IE0/IT0 and IE1/IT1 bits are transposed from the positions used in the standard 80C51 TCON register.

Timer I is used to control the timing of the I^2C bus and also to detect a "bus locked" condition, by causing an interrupt when nothing happens on the I^2C bus for an inordinately long period of time while a transmission is in progress. If the interrupt does not occur, the program can attempt to correct the fault and allow the last I^2C transmission to be repeated.

The I^2C watchdog timer, timer I, is also available as a general-purpose fixed-rate timer when the I^2C interface is not being used. A clock rate of 1/12 the oscillator frequency forms the input to the timer. Timer I has a timeout interval of 1024 machine cycles when used as a fixed-rate timer.

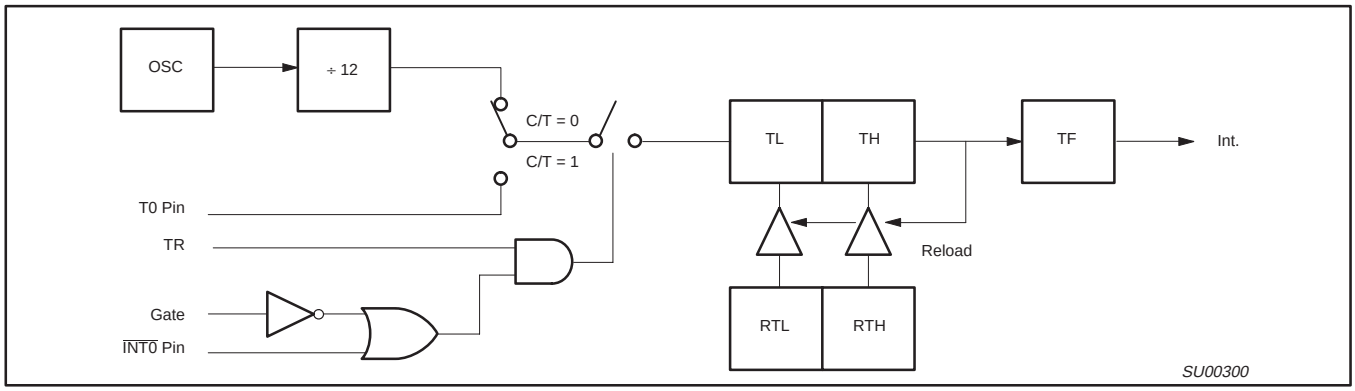

Figure 4. 83C751 Counter/Timer Block Diagram

I²C Serial Interface

The I²C bus uses two wires (SDA and SCL) to transfer information between devices connected to the bus. The main features of the bus are:

- Bidirectional data transfer between masters and slaves
- Serial addressing of slaves (no added wiring)
- Acknowledgment after each transferred byte
- Multimaster bus
- Arbitration between simultaneously transmitting masters without corruption of serial data on bus
- The 82B715 extends communication distance to 100 feet (30M).

A large family of I²C compatible ICs is available. See the I²C section of this manual for more details on the bus and available ICs.

The 83C751 I²C subsystem includes hardware to simplify the software required to drive the I²C bus. The hardware is a single bit interface which in addition to including the necessary arbitration and framing error checks, includes clock stretching and a bus timeout timer. The interface is synchronized to software either through polled loops or interrupts. Refer to the application note AN422, in Section 4, entitled “Using the 8XC751 Microcontroller as an I²C Bus Master” for additional discussion of the 83C751 I²C interface and sample driver routines.

Six time spans are important in I²C operation and are insured by timer I:

- The MINIMUM HIGH time for SCL when this device is the master.
- The MINIMUM LOW time for SCL when this device is a master. This is not very important for a single-bit hardware interface like this one, because the SCL low time is stretched until the software responds to the I²C flags. The software response time normally meets or exceeds the MIN LO time. In cases where the software responds within MIN HI + MIN LO) time, timer I will ensure that the minimum time is met.
- The MINIMUM SCL HIGH TO SDA HIGH time in a stop condition.
- The MINIMUM SDA HIGH TO SDA LOW time between I²C stop and start conditions (4.7µs, see spec.).
- The MINIMUM SDA LOW TO SCL LOW time in a start condition.
- The MAXIMUM SCL CHANGE time while an I²C frame is in progress. A frame is in progress between a start condition and the following stop condition. This time span serves to detect a lack of software response on this 8XC751 as well as external I²C problems. SCL “stuck low” indicates a faulty master or slave. SCL “stuck high” may mean a faulty device, or that noise induced onto the I²C bus caused all masters to withdraw from I²C arbitration.

The first five of these times are 4.7µs (see I²C specification) and are covered by the low order three bits of timer I. Timer I is clocked by the 8XC751 oscillator, which can vary in frequency from 0.5 to 16MHz. Timer I can be preloaded with one of four values to optimize timing for different oscillator frequencies. At lower frequencies, software response time is increased and will degrade maximum performance of the I²C bus. See special function register I2CFG description for prescale values (CT0, CT1).

The MAXIMUM SCL CHANGE time is important, but its exact span is not critical. The complete 10 bits of timer I are used to count out the maximum time. When I²C operation is enabled, this counter is cleared by transitions on the SCL pin. The timer does not run between I²C frames (i.e., whenever reset or stop occurred more recently than the last start). When this counter is running, it will carry out after 1020 to 1023 machine cycles have elapsed since a change on SCL. A carry out causes a hardware reset of the 83C751 I²C interface and generates an interrupt if the timer I interrupt is enabled. In cases where the bus hangup is due to a lack of software response by this 83C751, the reset releases SCL and allows I²C operation among other devices to continue.

I²C Interrupts

If I²C interrupts are enabled (EA and EI2 are both set to 1), an I²C interrupt will occur whenever the ATN flag is set by a start, stop, arbitration loss, or data ready condition (refer to the description of ATN following). In practice, it is not efficient to operate the I²C interface in this fashion because the I²C interrupt service routine would somehow have to distinguish between hundreds of possible conditions. Also, since I²C can operate at a fairly high rate, the software may execute faster if the code simply waits for the I²C interface.

Typically, the I²C interrupt should only be used to indicate a start condition at an idle slave device, or a stop condition at an idle master device (if it is waiting to use the I²C bus). This is accomplished by enabling the I²C interrupt only during the aforementioned conditions.

I²C Register I2CON

	7	6	5	4	3	2	1	0
Read	RDAT	ATN	DRDY	ARL	STR	STP	MASTER	–
Write	CXA	IDLE	CDR	CARL	CSTR	CSTP	XSTR	XSTP

Reading I2CON

RDAT The data from SDA is captured into “Receive DATa” whenever a rising edge occurs on SCL. RDAT is also available (with seven low-order zeros) in the I2DAT register. The difference between reading it here and there is that reading I2DAT clears DRDY, allowing the I²C to proceed on to another bit. Typically, the first seven bits of a received byte are read from I2DAT, while the 8th is read here. Then I2DAT can be written to send the Ack bit and clear DRDY.

ATN “ATteNtion” is 1 when one or more of DRDY, ARL, STR, or STP is 1. Thus, ATN comprises a single bit that can be tested to release the I²C service routine from a “wait loop.”

DRDY “Data ReaDY” (and thus ATN) is set when a rising edge occurs on SCL, except at idle slave. DRDY is cleared by writing CDR = 1, or by writing or reading the I2DAT register. The following low period on SCL is stretched until the program responds by clearing DRDY.

Checking ATN and DRDY

When a program detects ATN = 1, it should next check DRDY. If DRDY = 1, then if it receives the last bit, it should capture the data from RDAT (in I2DAT or I2CON). Next, if the next bit is to be sent, it should be written to I2DAT. One way or another, it should clear DRDY and then return to monitoring ATN. Note that if any of ARL, STR, or STP is set, clearing DRDY will not release SCL to high, so that the I^{2}C will not go on to the next bit. If a program detects ATN = 1, and DRDY = 0, it should go on to examine ARL, STR, and STP.

ARL "Arbitration Loss" is 1 when transmit Active was set, but this 83C751 lost arbitration to another transmitter. Transmit Active is cleared when ARL is 1. There are four separate cases in which ARL is set.

1. If the program sent a 1 or repeated start, but another device sent a 0, or a stop, so that SDA is 0 at the rising edge of SCL. (If the other device sent a stop, the setting of ARL will be followed shortly by STP being set.)
2. If the program sent a 1, but another device sent a repeated start, and it drove SDA low before the 83C751 could drive SCL low. (This type of ARL is always accompanied by STR = 1.)
3. In master mode, if the program sent a repeated start, but another device sent a 1, and it drove SCL low before this 83C751 could drive SDA low.
4. In master mode, if the program sent stop, but it could not be sent because another device sent a 0.

STR "STaRt" is set to a 1 when an I^{2}C start condition is detected at a non-idle slave or at a master. (STR is not set when an idle slave becomes active due to a start bit; the slave has nothing useful to do until the rising edge of SCL sets DRDY.)

STP "SToP" is set to 1 when an I^{2}C stop condition is detected at a non-idle slave or at a master. (STP is not set for a stop condition at an idle slave.)

MASTER "MASTER" is 1 if this 83C751 is currently a master on the I^{2}C. MASTER is set when MASTRQ is 1 and the bus is not busy (i.e., if a start bit hasn't been received since reset or a "Timer I" time-out, or if a stop has been received since the last start). MASTER is cleared when ARL is set, or after the software writes MASTRQ = 0 and then XSTP = 1.

Writing I2CON

Typically, for each bit in an I^{2}C message, a service routine waits for ATN = 1. Based on DRDY, ARL, STR, and STP, and on the current bit position in the message, it may then write I2CON with one or more of the following bits, or it may read or write the I2DAT register.

CXA Writing a 1 to "Clear Xmit Active" clears the Transmit Active state. (Reading the I2DAT register also does this.)

Regarding Transmit Active

Transmit Active is set by writing the I2DAT register, or by writing I2CON with XSTR = 1 or XSTP = 1. The I^{2}C interface will only drive the SDA line low when Transmit Active is set, and the ARL bit will only be set to 1 when Transmit Active is set. Transmit Active is cleared by reading the I2DAT register, or by writing I2CON with CXA = 1. Transmit Active is automatically cleared when ARL is 1.

IDLE Writing 1 to "IDLE" causes a slave's I^{2}C hardware to ignore the I^{2}C until the next start condition (but if MASTRQ is 1, then a stop condition will make the 83C751 into a master).

CDR Writing a 1 to "Clear Data Ready" clears DRDY. (Reading or writing the I2DAT register also does this.)

CARL Writing a 1 to "Clear Arbitration Loss" clears the ARL bit.

CSTR Writing a 1 to "Clear STaRt" clears the STR bit.

CSTP Writing a 1 to "Clear SToP" clears the STP bit. Note that if one or more of DRDY, ARL, STR, or STP is 1, the low time of SCL is stretched until the service routine responds by clearing them.

XSTR Writing 1s to "Xmit repeated STaRt" and CDR tells the I^{2}C hardware to send a repeated start condition. This should only be at a master. Note that XSTR need not and should not be used to send an "initial" (nonrepeated) start; it is sent automatically by the I^{2}C hardware. Writing XSTR = 1 includes the effect of writing I2DAT with XDAT = 1; it sets Transmit Active and releases SDA to high during the SCL low time. After SCL goes high, the I^{2}C hardware waits for the suitable minimum time and then drives SDA low to make the start condition.

XSTP Writing 1s to "Xmit SToP" and CDR tells the I^{2}C hardware to send a stop condition. This should only be done at a master. If there are no more messages to initiate, the service routine should clear the MASTRQ bit in I2CFG to 0 before writing XSTP with 1. Writing XSTP = 1 includes the effect of writing I2DAT with XDAT = 0; it sets Transmit Active and drives SDA low during the SCL low time. After SCL goes high, the I^{2}C hardware waits for the suitable minimum time and then releases SDA to high to make the stop condition.

NOTE: Because of the manner in which register bit addressing is implemented in the 80C51 family, the I2CON register should never be altered by use of the SETB, CLR, CPL, MOV (bit), or JBC instructions. This is due to the fact that read and write functions of this register are different. Testing of I2CON bits via the JB and JNB instructions is supported.

I2C Register I2DAT

	7	6	5	4	3	2	1	0
Read	RDAT	0	0	0	0	0	0	0
Write	XDAT	X	X	X	X	X	X	X

RDAT "Receive DATa" is captured from SDA every rising edge of SCL. Reading I2DAT also clears DRDY and the Transmit Active state.

XDAT "Xmit Data" sets the data for the next bit. Writing I2DAT also clears DRDY and sets the Transmit Active state.

Regarding Software Response Time

Because the 83C751 can run at 16MHz, and because the I2C interface is optimized for high-speed operation, it is quite likely that an I2C service routine will sometimes respond to DRDY (which is set at a rising edge of SCL) and write I2DAT before SCL has gone low again. If XDAT were applied directly to SDA, this situation would produce an I2C protocol violation. The programmer need not worry about this possibility because XDAT is applied to SDA only when SCL is low.

Conversely, a program that includes an I2C service routine may take a long time to respond to DRDY. Typically, an I2C routine operates on a flag-polling basis during a message, with interrupts from other peripheral functions enabled. If an interrupt occurs, it will delay the response of the I2C service routine. The programmer need not worry about this very much either, because the I2C hardware stretches the SCL low time until the service routine responds. The only constraint on the response is that it must not exceed the Timer I time-out, which is at least 765 microseconds.

I2C Register I2CFG

	7	6	5	4	3	2	1	0
Read	SLAVEN	MASTRQ	0	TIRUN	–	–	CT1	CT0
Write	SLAVEN	MASTRQ	CLRTI	TIRUN	–	–	CT1	CT0

SLAVEN Writing a 1 to "SLAVe ENable" enables the slave functions of the I2C subsystem. If SLAVEN and MASTRQ are 0, the I2C hardware is disabled. This bit is cleared to 0 by reset and by an I2C time-out.

MASTRQ Writing a 1 to "MASTRQ" requests mastership of the I2C. If a frame from another master is in progress when this bit is changed from 0 to 1, action is delayed until a stop condition is detected. Then, or immediately if a frame is not in progress, a start condition is sent and DRDY is set (thus making ATN 1 and generating an I2C interrupt). When a master wishes to release mastership status of the I2C, it writes a 1 to XSTP in I2CON. MASTRQ is cleared by reset and by an I2C time-out.

CLRTI Writing a 1 to this bit clears the Timer I interrupt flag. This bit position always reads as a 0.

TIRUN Writing a 1 to this bit lets Timer I run; a zero stops and clears it. Together with SLAVEN, MASTRQ, and MASTER, this bit determines operational modes as shown in Table 4.

CT1,0 These two bits are programmed as a function of the OSC rate, to optimize the MIN HI and LO time of SCL when this 83C751 is a master on the I2C. The time value determined by these bits controls both of these parameters, and also the timing for stop and start conditions. These bits are cleared to 00 by reset.

Values to be used in the CT1 and CT0 bits are shown in Table 5. To allow the I2C bus to run at the maximum rate for a particular oscillator frequency, compare the actual oscillator rate to the f_{OSC} max column in the table. The value for CT1 and CT0 is found in the first line of the table where f_{OSC} max is greater than or equal to the actual frequency.

The table also shows the osc/12 count for various settings of CT1/CT0. This allows calculation of the actual minimum high and low times for SCL as follows:

SCL min high/low time (in microseconds) = 12 * count / osc (in MHz)

For instance, at a 16MHz frequency, with CT1/CT0 set to 10, the minimum SCL high and low times will be 5.25µs.

The table also shows the Timer I timeout period (given in machine cycles) for each CT1/CT0 combination. The timeout period varies because of the way in which minimum SCL high and low times are measured. When the I2C interface is operating, Timer I is preloaded at every SCL transition with a value dependent upon CT1/CT0. The preload value is chosen such that a minimum SCL high or low time has elapsed when Timer I reaches a count of 008 (the actual value preloaded into Timer I is 8 minus the osc/12 count).

Table 4. Interaction of TIRUN with SLAVEN, MASTRQ, and MASTER

SLAVEN, MASTRQ, MASTER	TIRUN	OPERATING MODE
All 0	0	The I²C interface is disabled. Timer I is cleared and does not run. This is the state assumed after a reset. If an I²C application wants to ignore the I²C at certain times, it should write SLAVEN, MASTRQ, and TIRUN all to zero.
All 0	1	The I²C interface is disabled. Timer I operates as a free-running time base. Use this mode only in non-I²C applications.
Any or all 1	0	The I²C interface is enabled. The 3 low-order bits of Timer I run for min-time generation, but the hi-order bits do not, so that there is no checking for I²C being “hung.” This configuration can be used for very slow I²C operation.
Any or all 1	1	The I²C interface is enabled. Timer I runs during frames on the I²C, and is cleared by transitions on SCL, and by Start and Stop conditions. This is the normal state for I²C operation.

Table 5. CT1, CT0 Values

CT1, CT0	OSC/12 COUNT	f_{OSC} MAX	TIMEOUT PERIOD
10	7	16.8MHz	1023 cycles
01	6	14.4MHz	1022 cycles
00	5	12.0MHz	1021 cycles
11	4	9.6MHz	1020 cycles

I²C Register I2STA

READ ONLY

7	6	5	4	3	2	1	0
–	IDLE	XDATA	XACTV	MAKSTR	MAKSTP	XSTR	XSTP

MSB LSB

This register is read only and reflects the internal status of the I²C hardware. IDLE, XSTR, and XSTP reflect the status of the like named bits in the I2CON register.

XDATA **The content of the transmitter buffer.**

XACTV Transmitter active.

MAKSTR This bit is high while the hardware is effecting a start condition.

MAKSTP This bit is high while the hardware is effecting a stop condition.

XSTR This bit is active while the hardware is effecting a repeated start condition.

XSTP This bit is active while the hardware is effecting a repeated stop condition.

Interrupts

The interrupt structure is a five-source, one-level interrupt system. Interrupt sources common to the 80C51 are the external interrupts ($\overline{INT0}$, $\overline{INT1}$) and the timer/counter interrupt (ET0). The I²C interrupt (EI2) and Timer I interrupt (ETI) are the other two interrupt sources. The interrupt sources are listed below in their order of polling sequence priority.

Upon interrupt or reset the program counter is loaded with specific values for the appropriate interrupt service routine in program memory. These values are:

Event	Program Memory Address	Priority
Reset	000	Highest
INT0	003	
Counter/Timer 0	00B	
INT1	013	
Timer I	01B	
I²C	023	Lowest

The interrupt enable register (IE) is used to individually enable or disable the five sources. Bit $\overline{EA}$ in the interrupt enable register can be used to globally enable or disable all interrupt sources. The interrupt enable register is described below. All other interrupt details are based on the 80C51 interrupt architecture.

Interrupt Enable Register

7	6	5	4	3	2	1	0
$\overline{EA}$	X	X	EI2	ETI	EX1	ET0	EX0

Symbol	Position	Function
$\overline{EA}$	IE.7	Disables all interrupts. If EA = 0, no interrupt will be acknowledged. If EA = 1, each interrupt source is individually enabled or disabled by setting or clearing its enable bit
–	IE.6	Reserved
–	IE.5	Reserved
EI2	IE.4	Enables or disables the I²C interrupt. If EI2 = 0, the I²C interrupt is disabled
ETI	IE.3	Enables or disables the Timer I overflow interrupt. If ETI = 0, the Timer I interrupt is disabled.
EX1	IE.2	Enables or disables external interrupt 1. If EX1 = 0, external interrupt 1 is disabled.
ET0	IE.1	Enables or disables the Timer 0 overflow interrupt. If ET0 = 0, theTimer 0 interrupt is disabled.
EX0	IE.0	Enables or disables external interrupt 0. If EX0 = 0, external interrupt 0 is disabled.

87C751 PROGRAMMING CONSIDERATIONS

EPROM Characteristics

The 87C751 is programmed by using a modified Quick-Pulse Programming algorithm similar to that used for devices such as the 87C451 and 87C51. It differs from these devices in that a serial data stream is used to place the 87C751 in the programming mode.

Figure 5 shows a block diagram of the programming configuration for the 87C751. Port pin P0.2 is used as the programming voltage supply input (V_{PP} signal). Port pin P0.1 is used as the program (PGM/) signal. This pin is used for the 25 programming pulses.

Port 3 is used as the address input for the byte to be programmed and accepts both the high and low components of the eleven bit address. Multiplexing of these address components is performed using the ASEL input. The user should drive the ASEL input high and then drive port 3 with the high order bits of the address. ASEL should remain high for at least 13 clock cycles. ASEL may then be driven low which latches the high order bits of the address internally. the high address should remain on port 3 for at least two clock cycles after ASEL is driven low. Port 3 may then be driven with the low byte of the address. The low address will be internally stable 13 clock cycles later. The address will remain stable provided that the low byte placed on port 3 is held stable and ASEL is kept low. **Note:** ASEL needs to be pulsed high only to change the high byte of the address.

Port 1 is used as a bidirectional data bus during programming and verify operations. During programming mode, it accepts the byte to be programmed. During verify mode, it provides the contents of the EPROM location specified by the address which has been supplied to Port 3.

The XTAL1 pin is the oscillator input and receives the master system clock. This clock should be between 1.2 and 6MHz.

The RESET pin is used to accept the serial data stream that places the 87C751 into various programming modes. This pattern consists of a 10-bit code with the LSB sent first. Each bit is synchronized to the clock input, X1.

Programming Operation

Figures 6 and 7 show the timing diagrams for the program/verify cycle. RESET should initially be held high for at least two machine cycles. P0.1 (PGM/) and P0.2 (V_{PP}) will be at V_{OH} as a result of the RESET operation. At this point, these pins function as normal quasi-bidirectional I/O ports and the programming equipment may pull these lines low. However, prior to sending the 10-bit code on the RESET pin, the programming equipment should drive these pins high (V_{IH}). The RESET pin may now be used as the serial data input for the data stream which places the 87C751 in the programming mode. Data bits are sampled during the clock high time and thus should only change during the time that the clock is low. Following transmission of the last data bit, the RESET pin should be held low.

Next the address information for the location to be programmed is placed on port 3 and ASEL is used to perform the address multiplexing, as previously described. At this time, port 1 functions as an output.

A high voltage V_{PP} level is then applied to the V_{PP} input (P0.2). (This sets Port 1 as an input port). The data to be programmed into the EPROM array is then placed on Port 1. This is followed by a series of programming pulses applied to the PGM/ pin (P0.1). These pulses are created by driving P0.1 low and then high. This pulse is repeated until a total of 25 programming pulses have occurred. At the conclusion of the last pulse, the PGM/ signal should remain high.

The V_{PP} signal may now be driven to the V_{OH} level, placing the 87C751 in the verify mode. (Port 1 is now used as an output port). After four machine cycles (48 clock periods), the contents of the addressed location in the EPROM array will appear on Port 1.

The next programming cycle may now be initiated by placing the address information at the inputs of the multiplexed buffers, driving the V_{PP} pin to the V_{PP} voltage level, providing the byte to be programmed to Port1 and issuing the 26 programming pulses on the PGM/ pin, bringing V_{PP} back down to the V_C level and verifying the byte.

Programming Modes

The 87C751 has four programming features incorporated within its EPROM array. These include the USER EPROM for storage of the application's code, a 16-byte encryption key array and two security bits. Programming and verification of these four elements are selected by a combination of the serial data stream applied to the RESET pin and the voltage levels applied to port pins P0.1 and P0.2. The various combinations are shown in Table 6.

Encryption Key Table

The 87C751 includes a 16-byte EPROM array that is programmable by the end user. The contents of this array can then be used to encrypt the program memory contents during a program memory verify operation. When a program memory verify operation is performed, the contents of the program memory location is XNOR'ed with one of the bytes in the 16-byte encryption table. The resulting data pattern is then provided to port 1 as the verify data. The encryption mechanism can be disable, in essence, by leaving the bytes in the encryption table in their erased state (FFH) since the XNOR product of a bit with a logical one will result in the original bit. The encryption bytes are mapped with the code memory in 16-byte groups. the first byte in code memory will be encrypted with the first byte in the encryption table; the second byte in code memory will be encrypted with the second byte in the encryption table and so forth up to and including the 16the byte. The encryption repeats in 16-byte groups; the 17th byte in the code memory will be encrypted with the first byte in the encryption table, and so forth.

Security Bits

Two security bits, security bit 1 and security bit 2, are provided to limit access to the USER EPROM and encryption key arrays. Security bit 1 is the program inhibit bit, and once programmed performs the following functions:

1. Additional programming of the USER EPROM is inhibited.
2. Additional programming of the encryption key is inhibited.
3. Verification of the encryption key is inhibited.
4. Verification of the USER EPROM and the security bit levels may still be performed.

(If the encryption key array is being used, this security bit should be programmed by the user to prevent unauthorized parties from reprogramming the encryption key to all logical zero bits. Such programming would provide data during a verify cycle that is the logical complement of the USER EPROM contents).

Security bit 2, the verify inhibit bit, prevents verification of both the USER EPROM array and the encryption key arrays. The security bit levels may still be verified.

Programming and Verifying Security Bits

Security bits are programmed employing the same techniques used to program the USER EPROM and KEY arrays using serial data streams and logic levels on port pins indicated in Table 6. When programming either security bit, it is not necessary to provide address or data information to the 87C751 on ports 1 and 3.

Verification occurs in a similar manner using the RESET serial stream shown in Table 6. Port 3 is not required to be driven and the results of the verify operation will appear on ports 1.6 and 1.7.

Ports 1.7 contains the security bit 1 data and is a logical one if programmed and a logical zero if not programmed. Likewise, P1.6 contains the security bit 2 data and is a logical one if programmed and a logical zero if not programmed.

Erasure Characteristics

Erasure of the EPROM begins to occur when the chip is exposed to light with wavelengths shorter than approximately 4,000 angstroms. Since sunlight and fluorescent lighting have wavelengths in this range, exposure to these light sources over an extended time (about 1 week in sunlight, or 3 years in room level fluorescent lighting) could cause inadvertent erasure. **For this and secondary effects, it is recommended that an opaque label be placed over the window.** For elevated temperature or environments where solvents are being used, apply Kapton tape Flourless part number 2345–5 or equivalent.

The recommended erasure procedure is exposure to ultraviolet light (at 2537 angstroms) to an integrated dose of at least 15W-s/cm^2. Exposing the EPROM to an ultraviolet lamp of 12,000µW/cm^2 rating for 20 to 39 minutes, at a distance of about 1 inch, should be sufficient.

Erasure leaves the array in an all 1s state.

Table 6. Implementing Program/Verify Modes

OPERATION	SERIAL CODE	P0.1 (PGM/)	P0.2 (V_{PP})
Program user EPROM	296H	–*	V_{PP}
Verify user EPROM	296H	V_{IH}	V_{IH}
Program key EPROM	292H	–*	V_{PP}
Verify key EPROM	292H	V_{IH}	V_{IH}
Program security bit 1	29AH	–*	V_{PP}
Program security bit 2	298H	–*	V_{PP}
Verify security bits	29AH	V_{IH}	V_{IH}

NOTE:
* Pulsed from V_{IH} to V_{IL} and returned to V_{IH}.

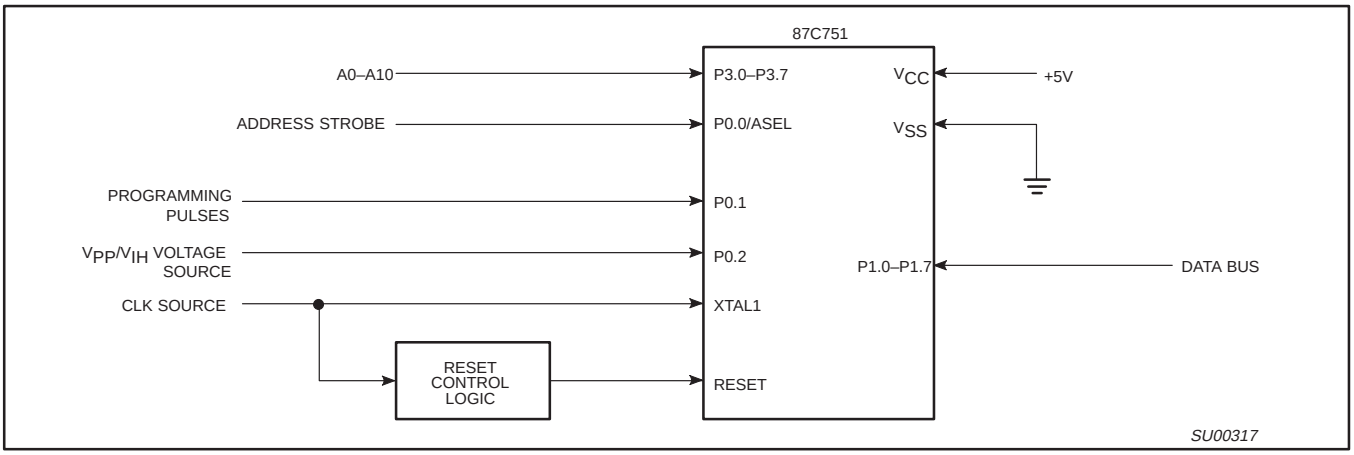

Figure 5. Programming Configuration

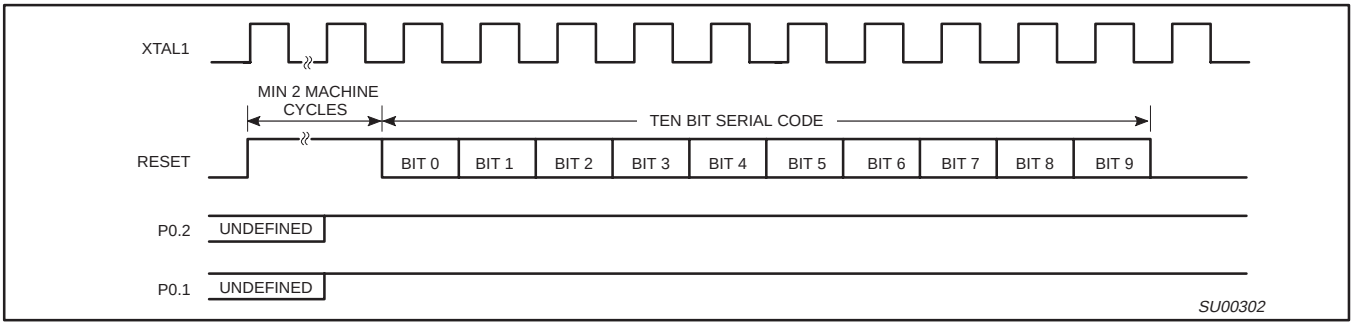

Figure 6. Entry into Program/Verify Modes

EPROM PROGRAMMING AND VERIFICATION

T_{amb} = 21°C to +27°C, V_{CC} = 5V ±10%, V_{SS} = 0V

SYMBOL	PARAMETER	MIN	MAX	UNIT
$1/t_{CLCL}$	Oscillator/clock frequency	1.2	6	MHz
t_{AVGL}[1]	Address setup to P0.1 (PROG–) low	10µs + $24t_{CLCL}$		
t_{GHAX}	Address hold after P0.1 (PROG–) high	$48t_{CLCL}$		
t_{DVGL}	Data setup to P0.1 (PROG–) low	$38t_{CLCL}$		
t_{GHDX}	Data hold after P0.1 (PROG–) high	$36t_{CLCL}$		
t_{SHGL}	V_{PP} setup to P0.1 (PROG–) low	10		µs
t_{GHSL}	V_{PP} hold after P0.1 (PROG–)	10		µs
t_{GLGH}	P0.1 (PROG–) width	90	110	µs
t_{AVQV}[2]	V_{PP} low (V_{CC}) to data valid		$48t_{CLCL}$	
t_{GHGL}	P0.1 (PROG–) high to P0.1 (PROG–) low	10		µs
t_{MASEL}	ASEL high time	$13t_{CLCL}$		
t_{HAHLD}	Address hold time	$2t_{CLCL}$		
t_{HASET}	Address setup to ASEL	$13t_{CLCL}$		
t_{ADSTA}	Low address to valid data		$48t_{CLCL}$	

NOTES:
1. Address should be valid at least $24t_{CLCL}$ before the rising edge of P0.2 (V_{PP}).
2. For a pure verify mode, i.e., no program mode in between, t_{AVQV} is $14t_{CLCL}$ maximum.

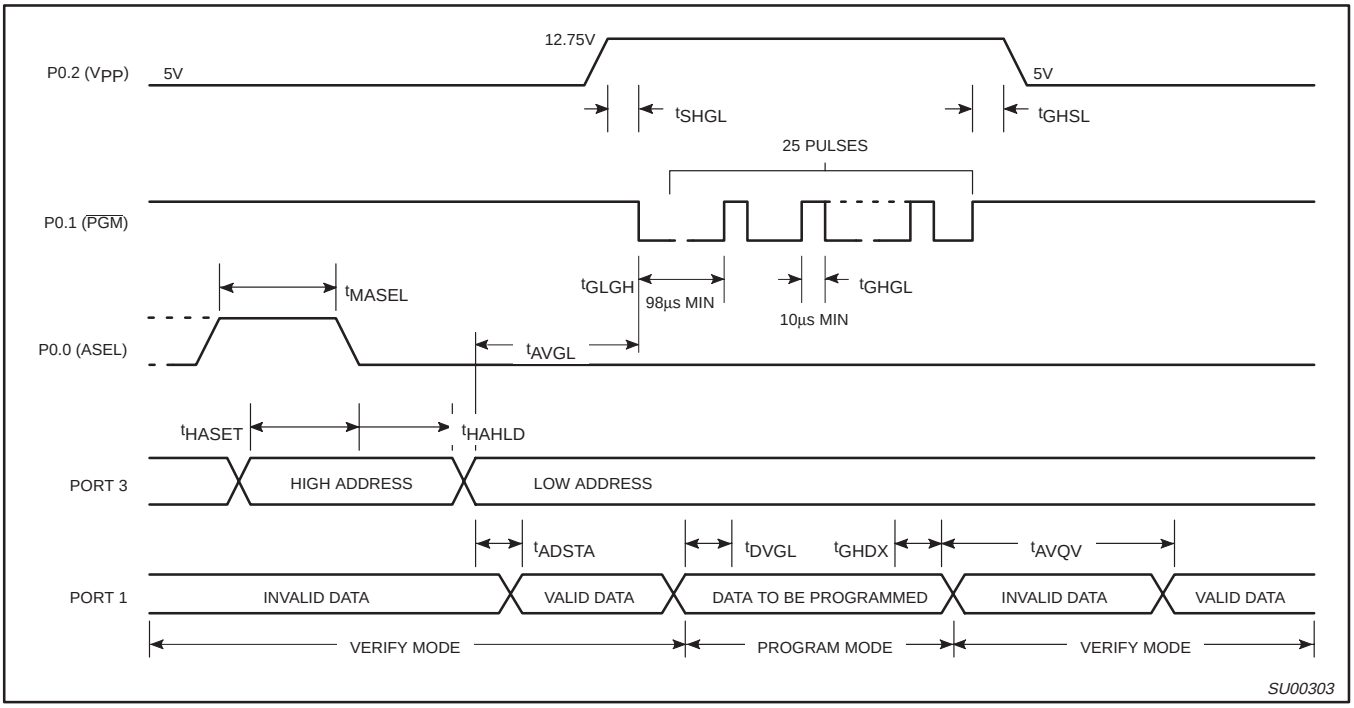

Figure 7. Program/Verify Cycle

Purchase of Philips I²C components conveys a license under the Philips' I²C patent to use the components in the I²C system provided the system conforms to the I²C specifications defined by Philips. This specification can be ordered using the code 9398 393 40011.

DIP24: plastic dual in-line package; 24 leads (300 mil) **SOT222-1**

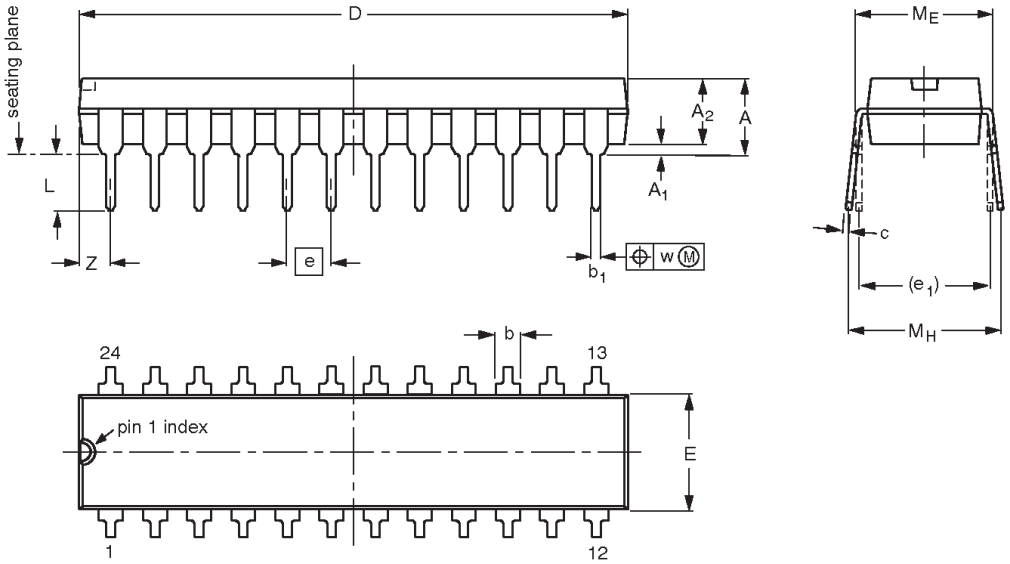

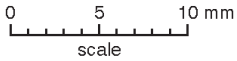

DIMENSIONS (millimetre dimensions are derived from the original inch dimensions)

UNIT	A max.	A_1 min.	A_2 max.	b	b_1	c	D (1)	E (1)	e	e_1	L	M_E	M_H	w	Z (1) max.
mm	4.70	0.38	3.94	1.63 1.14	0.56 0.43	0.36 0.25	31.9 31.5	6.73 6.48	2.54	7.62	3.51 3.05	8.13 7.62	10.03 7.62	0.25	2.05
inches	0.185	0.015	0.155	0.064 0.045	0.022 0.017	0.014 0.010	1.256 1.240	0.265 0.255	0.100	0.300	0.138 0.120	0.32 0.30	0.395 0.300	0.01	0.081

Note

1. Plastic or metal protrusions of 0.01 inches maximum per side are not included.

OUTLINE VERSION	REFERENCES				EUROPEAN PROJECTION	ISSUE DATE
	IEC	JEDEC	EIAJ			
SOT222-1		MS-001AF				95-03-11

PLCC28: plastic leaded chip carrer; 28 leads; pedestal **SOT261-3**

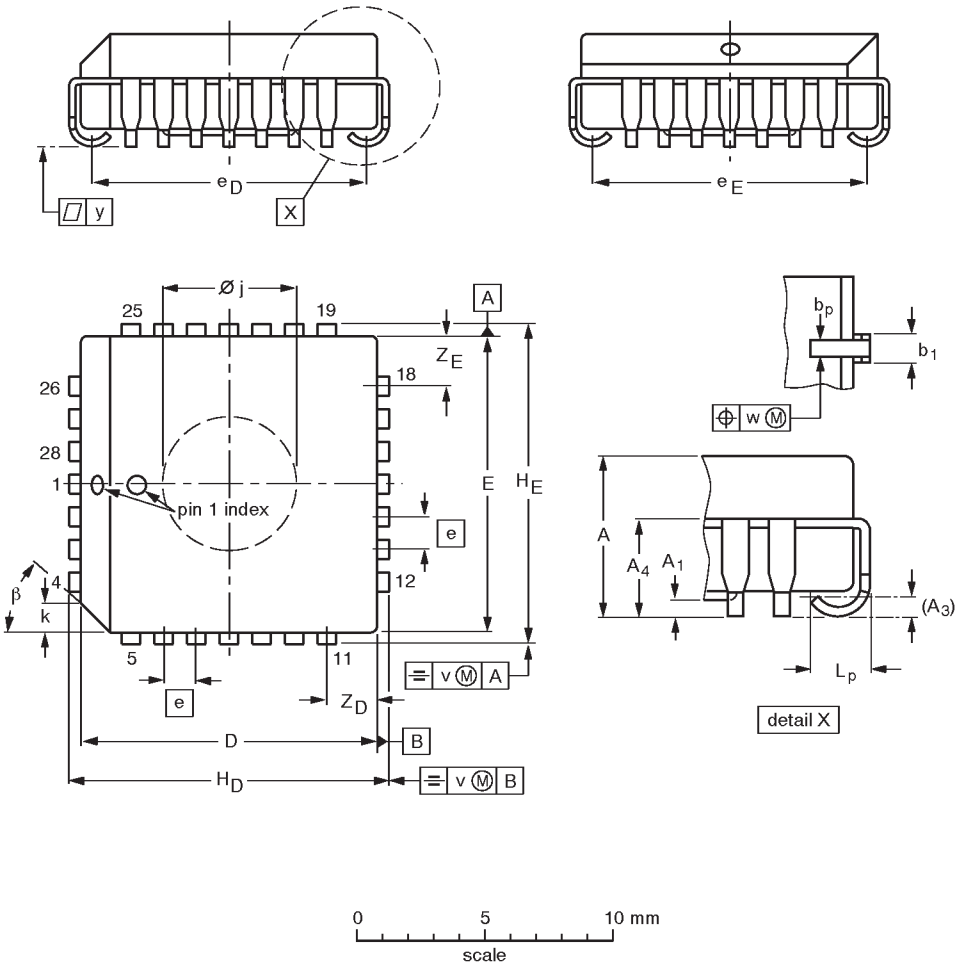

DIMENSIONS (millimetre dimensions are derived from the original inch dimensions)

UNIT	A	A_1 min.	A_3	A_4 max.	b_p	b_1	D(1)	E(1)	e	e_D	e_E	H_D	H_E	k	Ø$_j$	L_p	v	w	y	Z_D(1) max.	Z_E(1) max.	β
mm	4.57 4.19	0.13	0.25	3.05	0.53 0.33	0.81 0.66	11.58 11.43	11.58 11.43	1.27	10.92 9.91	10.92 9.91	12.57 12.32	12.57 12.32	1.22 1.07	5.69 5.54	1.44 1.02	0.18	0.18	0.10	2.06	2.06	45°
inches	0.180 0.165	0.005	0.01	0.12	0.021 0.013	0.032 0.026	0.456 0.450	0.456 0.450	0.05	0.430 0.390	0.430 0.390	0.495 0.485	0.495 0.485	0.048 0.042	0.224 0.218	0.057 0.040	0.007	0.007	0.004	0.081	0.081	

Note

1. Plastic or metal protrusions of 0.01 inches maximum per side are not included.

OUTLINE VERSION	REFERENCES				EUROPEAN PROJECTION	ISSUE DATE
	IEC	JEDEC	EIAJ			
SOT261-3		MO-047AB				~~92-11-17~~ 95-02-25

SSOP24: plastic shrink small outline package; 24 leads; body width 5.3 mm **SOT340-1**

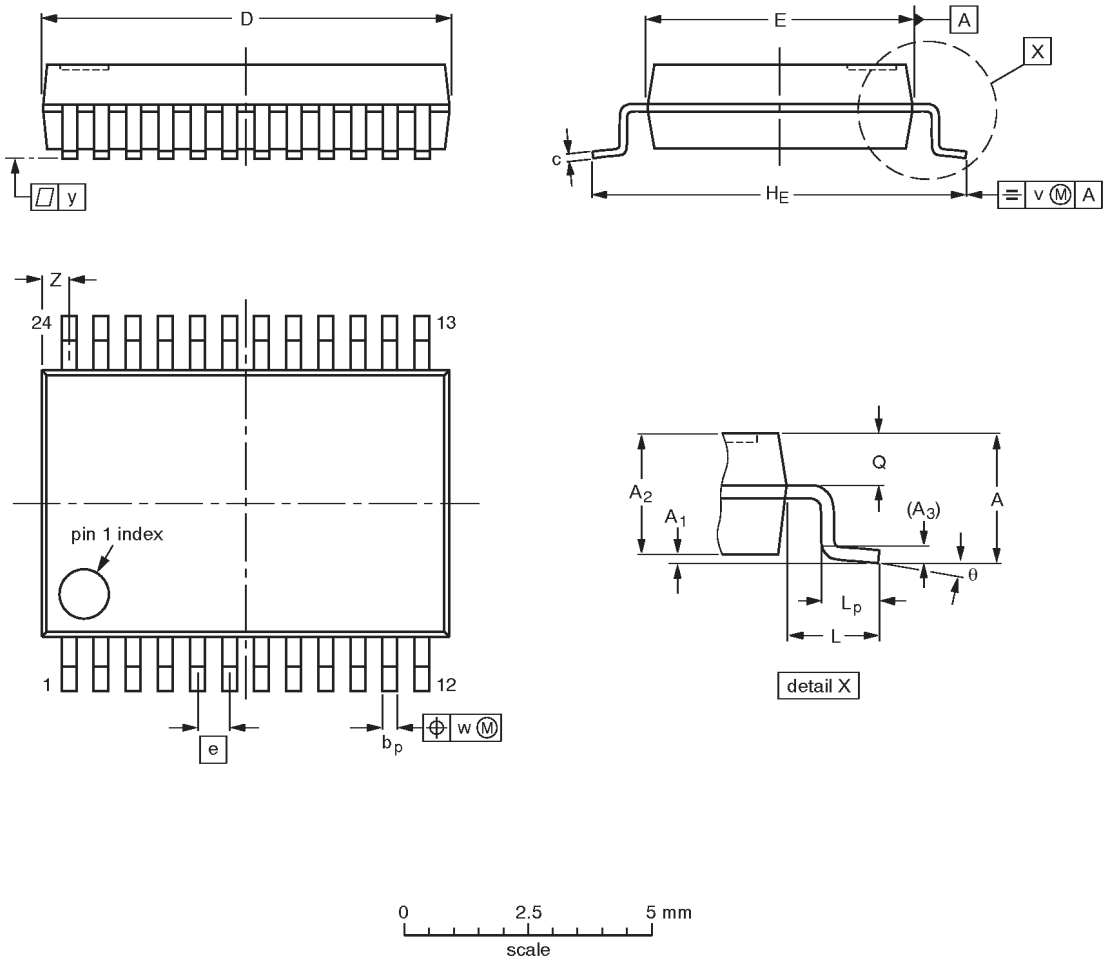

DIMENSIONS (mm are the original dimensions)

UNIT	A max.	A_1	A_2	A_3	b_p	c	D(1)	E(1)	e	H_E	L	L_p	Q	v	w	y	Z(1)	θ
mm	2.0	0.21 0.05	1.80 1.65	0.25	0.38 0.25	0.20 0.09	8.4 8.0	5.4 5.2	0.65	7.9 7.6	1.25	1.03 0.63	0.9 0.7	0.2	0.13	0.1	0.8 0.4	8° 0°

Note

1. Plastic or metal protrusions of 0.20 mm maximum per side are not included.

OUTLINE VERSION	REFERENCES				EUROPEAN PROJECTION	ISSUE DATE
	IEC	JEDEC	EIAJ			
SOT340-1		MO-150AG				~~93-09-08~~ 95-02-04

NOTES

Data sheet status

Data sheet status	Product status	Definition [1]
Objective specification	Development	This data sheet contains the design target or goal specifications for product development. Specification may change in any manner without notice.
Preliminary specification	Qualification	This data sheet contains preliminary data, and supplementary data will be published at a later date. Philips Semiconductors reserves the right to make chages at any time without notice in order to improve design and supply the best possible product.
Product specification	Production	This data sheet contains final specifications. Philips Semiconductors reserves the right to make changes at any time without notice in order to improve design and supply the best possible product.

[1] Please consult the most recently issued datasheet before initiating or completing a design.

Definitions

Short-form specification — The data in a short-form specification is extracted from a full data sheet with the same type number and title. For detailed information see the relevant data sheet or data handbook.

Limiting values definition — Limiting values given are in accordance with the Absolute Maximum Rating System (IEC 134). Stress above one or more of the limiting values may cause permanent damage to the device. These are stress ratings only and operation of the device at these or at any other conditions above those given in the Characteristics sections of the specification is not implied. Exposure to limiting values for extended periods may affect device reliability.

Application information — Applications that are described herein for any of these products are for illustrative purposes only. Philips Semiconductors make no representation or warranty that such applications will be suitable for the specified use without further testing or modification.

Disclaimers

Life support — These products are not designed for use in life support appliances, devices or systems where malfunction of these products can reasonably be expected to result in personal injury. Philips Semiconductors customers using or selling these products for use in such applications do so at their own risk and agree to fully indemnify Philips Semiconductors for any damages resulting from such application.

Right to make changes — Philips Semiconductors reserves the right to make changes, without notice, in the products, including circuits, standard cells, and/or software, described or contained herein in order to improve design and/or performance. Philips Semiconductors assumes no responsibility or liability for the use of any of these products, conveys no license or title under any patent, copyright, or mask work right to these products, and makes no representations or warranties that these products are free from patent, copyright, or mask work right infringement, unless otherwise specified.

Philips Semiconductors
811 East Arques Avenue
P.O. Box 3409
Sunnyvale, California 94088–3409
Telephone 800-234-7381

© Copyright Philips Electronics North America Corporation 1998
All rights reserved. Printed in U.S.A.

Date of release: 05-98

Document order number: 9397 750 03845

Let's make things better.

Philips Semiconductors

PHILIPS

НИОКР СИСТЕМС

ООО «НИОКРсистемс» - это оперативные поставки широкого спектра электронных компонентов отечественного и импортного производства напрямую от производителей и с крупнейших мировых складов. Реализуемая нашей компанией продукция насчитывает более полумиллиона наименований.

Благодаря этому наша компания предлагает к поставке практически не ограниченный ассортимент компонентов как оптовыми, мелкооптовыми партиями, так и в розницу.

Благодаря развитой сети поставщиков, помогаем в поиске и приобретении экзотичных или снятых с производства компонентов.

Наша компания это:

- Гарантия качества поставляемой продукции
- Широкий ассортимент
- Минимальные сроки поставок
- Техническая поддержка
- Подбор комплектации
- Индивидуальный подход
- Гибкое ценообразование
- Работаем по 275 ФЗ

ООО «НИОКР СИТЕМС»
Москва, 125362, Россия, ул. Вишневая, д. 9, к. 1, Блок 104 а и 104 в

Телефон: 8 (495) 268-14-82
Email: n@nsistems.ru

ИНН: 7735154786
ОГРН: 1167746717709