128K x 16 Static RAM

Features

- **High Speed**
  - **55ns and 70ns speed availability**
- **Low Voltage range:**
  - **2.7V-3.3V**
- **Ultra-low active power**
  - **Typical active current: 1.5 mA @ f = 1MHz**
  - **Typical active current: 7 mA @ f = f_{max}**
- **Low standby power**
- **Easy memory expansion with $\overline{CE}$ and $\overline{OE}$ features**
- **Automatic power-down when deselected**
- **CMOS for optimum speed/power**

Functional Description

The WCMA2016U4B is a high-performance CMOS static RAMs organized as 128K words by 16 bits. These devices feature advanced circuit design to provide ultra-low active current. This device is ideal for portable applications such as cellular telephones. The devices also have an automatic power-down feature that significantly reduces power consumption by 80% when addresses are not toggling. The device can also be put into standby mode reducing power consumption by more than 99% when deselected ($\overline{CE}$ HIGH or both $\overline{BLE}$ and $\overline{BHE}$ are HIGH). The input/output pins (I/O_0 through I/O_{15}) are placed in a high-impedance state when: deselected ($\overline{CE}$ HIGH), outputs are disabled ($\overline{OE}$ HIGH), both Byte High Enable and Byte Low Enable are disabled ($\overline{BHE}$, $\overline{BLE}$ HIGH), or during a write operation ($\overline{CE}$ LOW, and $\overline{WE}$ LOW).

Writing to the device is accomplished by taking Chip Enable ($\overline{CE}$) and Write Enable ($\overline{WE}$) inputs LOW. If Byte Low Enable ($\overline{BLE}$) is LOW, then data from I/O pins (I/O_0 through I/O_7), is written into the location specified on the address pins (A_0 through A_{16}). If Byte High Enable ($\overline{BHE}$) is LOW, then data from I/O pins (I/O_8 through I/O_{15}) is written into the location specified on the address pins (A_0 through A_{16}).

Reading from the device is accomplished by taking Chip Enable ($\overline{CE}$) and Output Enable ($\overline{OE}$) LOW while forcing the Write Enable ($\overline{WE}$) HIGH. If Byte Low Enable ($\overline{BLE}$) is LOW, then data from the memory location specified by the address pins will appear on I/O_0 to I/O_7. If Byte High Enable ($\overline{BHE}$) is LOW, then data from memory will appear on I/O_8 to I/O_{15}. See the truth table at the back of this data sheet for a complete description of read and write modes.

The WCMA2016U4B is available in a 48-ball FBGA package.

Logic Block Diagram

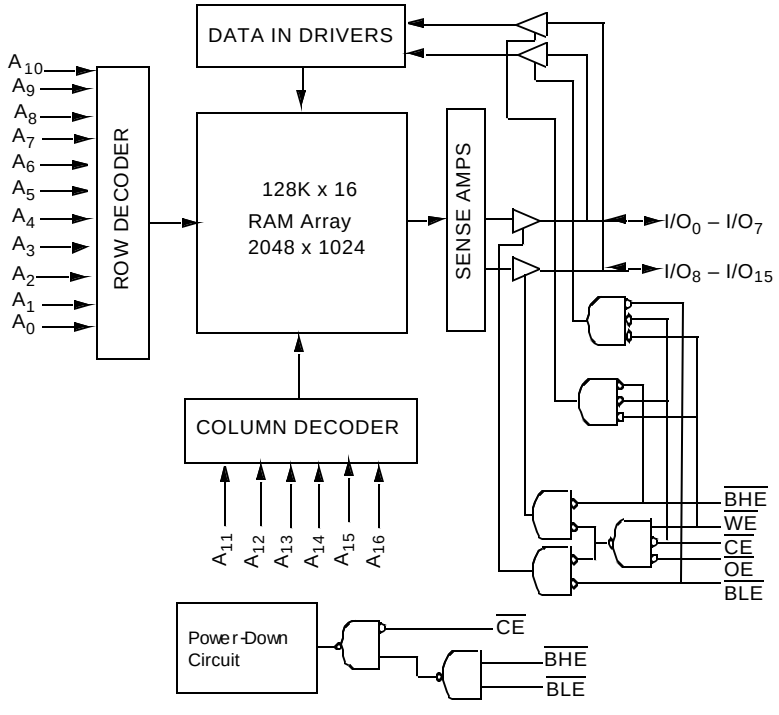

Pin Configuration[1, 2]

FBGA (Top View)

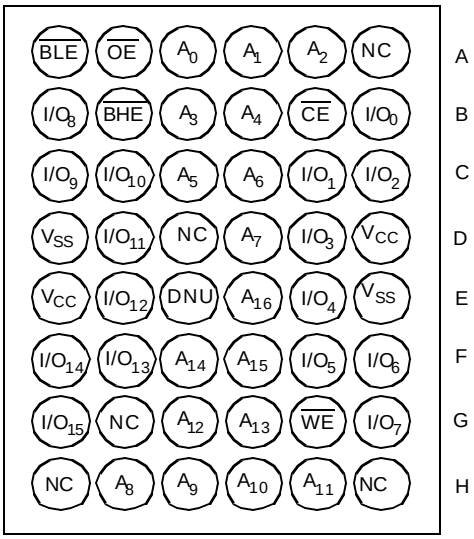

Maximum Ratings

(Above which the useful life may be impaired. For user guidelines, not tested.)

Storage Temperature ..... –65°C to +150°C

Ambient Temperature with Power Applied ..... –55°C to +125°C

Supply Voltage to Ground Potential ... –0.5V to V_{ccmax} + 0.5V

DC Voltage Applied to Outputs in High Z State[3] .....–0.5V to V_{CC} + 0.5V

DC Input Voltage[3] .....-0.5V to V_{CC} + 0.5V

Output Current into Outputs (LOW)..... 20 mA

Static Discharge Voltage ..... >2001V (per MIL-STD-883, Method 3015)

Latch-Up Current ..... >200 mA

Operating Range

Device	Range	Ambient Temperature	V_{CC}
WCMA2016U4B	Industrial	–40°C to +85°C	2.7V to 3.3V

Product Portfolio

Product	V_{CC} Range(V)			Speed (ns)	Power Dissipation (Industrial)					
					Operating, I_{CC} (mA)				Standby, I_{SB2} (mA)	
					f = 1 MHz		f = f_{max}			
	$V_{CC(min.)}$	$V_{CC(typ.)}$[4]	$V_{CC(max.)}$		Typ.[4]	Max.	Typ.[4]	Max.	Typ.[4]	Max.
WCMA2016U4B	2.7	3.0	3.3	70	1.5	2	7	15	2	10
				55						

Notes:

1. NC pins are not connected to the die.
2. E3 (DNU) can be left as NC or Vss to ensure proper application.
3. $V_{IL(min.)}$ = –2.0V for pulse durations less than 20 ns.
4. Typical values are included for reference only and are not guaranteed or tested. Typical values are measured at V_{CC} = $V_{CC(typ.)}$, T_A = 25°C.

Electrical Characteristics Over the Operating Range

Parameter	Description	Test Conditions		WCMA2016U4B-55			WCMA2016U4B-70			Unit
				Min.	Typ.[4]	Max.	Min.	Typ.[4]	Max.	
V_{OH}	Output HIGH Voltage	I_{OH} = –1.0 mA	V_{CC} = 2.7V	2.4			2.4			V
V_{OL}	Output LOW Voltage	I_{OL} = 2.1mA	V_{CC} = 2.7V			0.4			0.4	V
V_{IH}	Input HIGH Voltage			2.2		V_{CC} + 0.5V	2.2		V_{CC} + 0.5V	V
V_{IL}	Input LOW Voltage			–0.3		0.8	–0.3		0.8	V
I_{IX}	Input Leakage Current	GND ≤ V_I ≤ V_{CC}		–1		+1	–1		+1	µA
I_{OZ}	Output Leakage Current	GND ≤ V_O ≤ V_{CC}, Output Disabled		–1		+1	–1		+1	µA
I_{CC}	V_{CC} Operating Supply Current	f = f_{MAX} = $1/t_{RC}$	V_{CC} = 3.3V I_{OUT} = 0 mA CMOS Levels		7	15		7	15	mA
		f = 1 MHz			1.5	3		1.5	3	
I_{SB1}	Automatic CE Power-Down Current— CMOS Inputs	$\overline{CE}$ ≥ V_{CC} – 0.2V V_{IN} ≥ V_{CC} – 0.2V or V_{IN} ≤ 0.2V, f = f_{max} (Address and Data Only), f=0 ($\overline{OE}$,$\overline{WE}$,$\overline{BHE}$ and $\overline{BLE}$)			2	10		2	10	µA
I_{SB2}	Automatic CE Power-Down Current— CMOS Inputs	$\overline{CE}$ ≥ V_{CC} – 0.2V V_{IN} ≥ V_{CC} – 0.2V or V_{IN} ≤ 0.2V, f = 0, Vcc=3.3V								

Capacitance[5]

Parameter	Description	Test Conditions	Max.	Unit
C_{IN}	Input Capacitance	T_A = 25°C, f = 1 MHz, V_{CC} = $V_{CC(typ.)}$	6	pF
C_{OUT}	Output Capacitance		8	pF

Thermal Resistance

Description	Test Conditions	Symbol	BGA	Units
Thermal Resistance (Junction to Ambient)[5]	Still Air, soldered on a 4.25 x 1.125 inch, 4-layer printed circuit board	Θ_{JA}	55	°C/W
Thermal Resistance (Junction to Case)[5]		Θ_{JC}	16	°C/W

Note:

5. Tested initially and after any design or process changes that may affect these parameters.

AC Test Loads and Waveforms

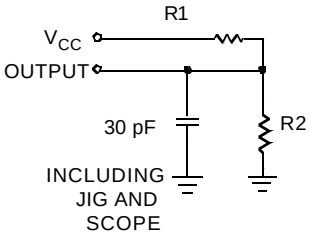

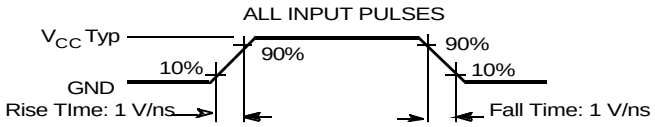

Equivalent to: THÉVENIN EQUIVALENT

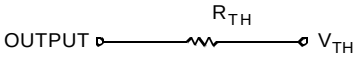

Parameters	3.0V	Unit
R1	1.105	KOhms
R2	1.550	KOhms
R_{TH}	0.645	KOhms
V_{TH}	1.75	Volts

Data Retention Characteristics (Over the Operating Range)

Parameter	Description	Conditions	Min.	Typ.[4]	Max.	Unit
V_{DR}	V_{CC} for Data Retention		1.5		V_{ccmax}	V
I_{CCDR}	Data Retention Current	$\overline{V_{CC}}$= 1.5V $\overline{CE} \geq V_{CC} - 0.2V$, $V_{IN} \geq V_{CC} - 0.2V$ or $V_{IN} \leq 0.2V$		0.5	7.5	µA
t_{CDR}[5]	Chip Deselect to Data Retention Time		0			ns
t_R[6]	Operation Recovery Time		70			ns

Data Retention Waveform[7]

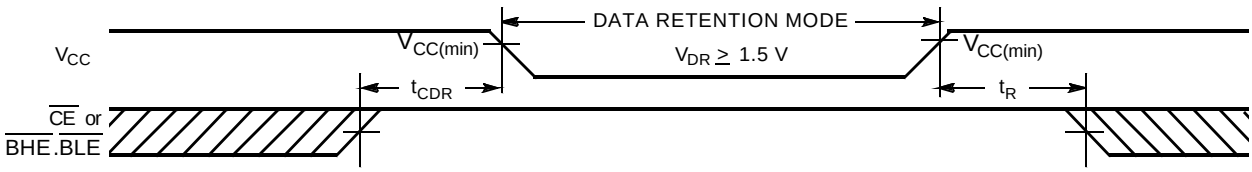

Note:

6. Full Device AC operation requires linear V_{CC} ramp from V_{DR} to $V_{CC(min.)}$ > 100 µs or stable at $V_{CC(min.)}$ > 100 µs.
7. $\overline{BHE}.\overline{BLE}$ is the AND of both $\overline{BHE}$ and $\overline{BLE}$. Chip can be deselected by either disabling the chip enable signals or by disabling both $\overline{BHE}$ and $\overline{BLE}$.

Switching Characteristics Over the Operating Range[8]

Parameter	Description	55ns		70 ns		Unit
		Min	Max	Min	Max	
READ CYCLE						
t_{RC}	Read Cycle Time	55		70		ns
t_{AA}	Address to Data Valid		55		70	ns
t_{OHA}	Data Hold from Address Change	10		10		ns
t_{ACE}	$\overline{CE}$ LOW to Data Valid		55		70	ns
t_{DOE}	$\overline{OE}$ LOW to Data Valid		25		35	ns
t_{LZOE}	$\overline{OE}$ LOW to Low Z[9]	5		5		ns
t_{HZOE}	$\overline{OE}$ HIGH to High Z[9, 11]		25		25	ns
t_{LZCE}	$\overline{CE}$ LOW to Low Z[9]	10		10		ns
t_{HZCE}	$\overline{CE}$ HIGH to High Z[9, 11]		25		25	ns
t_{PU}	$\overline{CE}$ LOW to Power-Up	0		0		ns
t_{PD}	$\overline{CE}$ HIGH to Power-Down		55		70	ns
t_{DBE}	$\overline{BHE}$ / $\overline{BLE}$ LOW to Data Valid		55		70	ns
t_{LZBE}[10]	$\overline{BHE}$ / $\overline{BLE}$ LOW to Low Z[9]	5		5		ns
t_{HZBE}	$\overline{BHE}$ / $\overline{BLE}$ HIGH to High Z[9, 11]		25		25	ns
WRITE CYCLE[12]						
t_{WC}	Write Cycle Time	55		70		ns
t_{SCE}	$\overline{CE}$ LOW to Write End	45		60		ns
t_{AW}	Address Set-Up to Write End	45		60		ns
t_{HA}	Address Hold from Write End	0		0		ns
t_{SA}	Address Set-Up to Write Start	0		0		ns
t_{PWE}	$\overline{WE}$ Pulse Width	40		50		ns
t_{BW}	$\overline{BHE}$ / $\overline{BLE}$ Pulse Width	50		60		ns
t_{SD}	Data Set-Up to Write End	25		30		ns
t_{HD}	Data Hold from Write End	0		0		ns
t_{HZWE}	$\overline{WE}$ LOW to High Z[9, 11]		20		25	ns
t_{LZWE}	$\overline{WE}$ HIGH to Low Z[9]	5		10		ns

Notes:

8. Test conditions assume signal transition time of 5 ns or less, timing reference levels of $V_{CC(typ.)}/2$, input pulse levels of 0 to $V_{CC(typ.)}$, and output loading of the specified I_{OL}/I_{OH} and 30 pF load capacitance.
9. At any given temperature and voltage condition, t_{HZCE} is less than t_{LZCE}, t_{HZBE} is less than t_{LZBE}, t_{HZOE} is less than t_{LZOE}, and t_{HZWE} is less than t_{LZWE} for any given device.
10. If both byte enables are toggled together this value is 10ns
11. t_{HZOE}, t_{HZCE}, t_{HZBE}, and t_{HZWE} transitions are measured when the outputs enter a high impedance state.
12. The internal write time of the memory is defined by the overlap of $\overline{WE}$, $\overline{CE}$ = V_{IL}, $\overline{BHE}$ and/or $\overline{BLE}$ = V_{IL}. All signals must be ACTIVE to initiate a write and any of these signals can terminate a write by going INACTIVE. The data input set-up and hold timing should be referenced to the edge of the signal that terminates the write..

Switching Waveforms

Read Cycle No. 1 (Address Transistion Controlled) [13, 14]

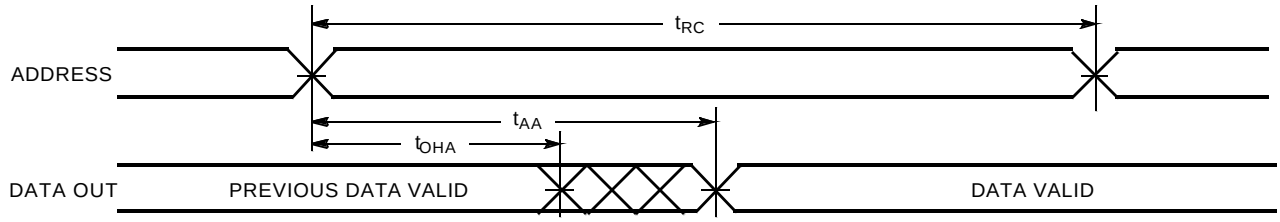

Read Cycle No. 2 ($\overline{OE}$ Controlled) [14, 15]

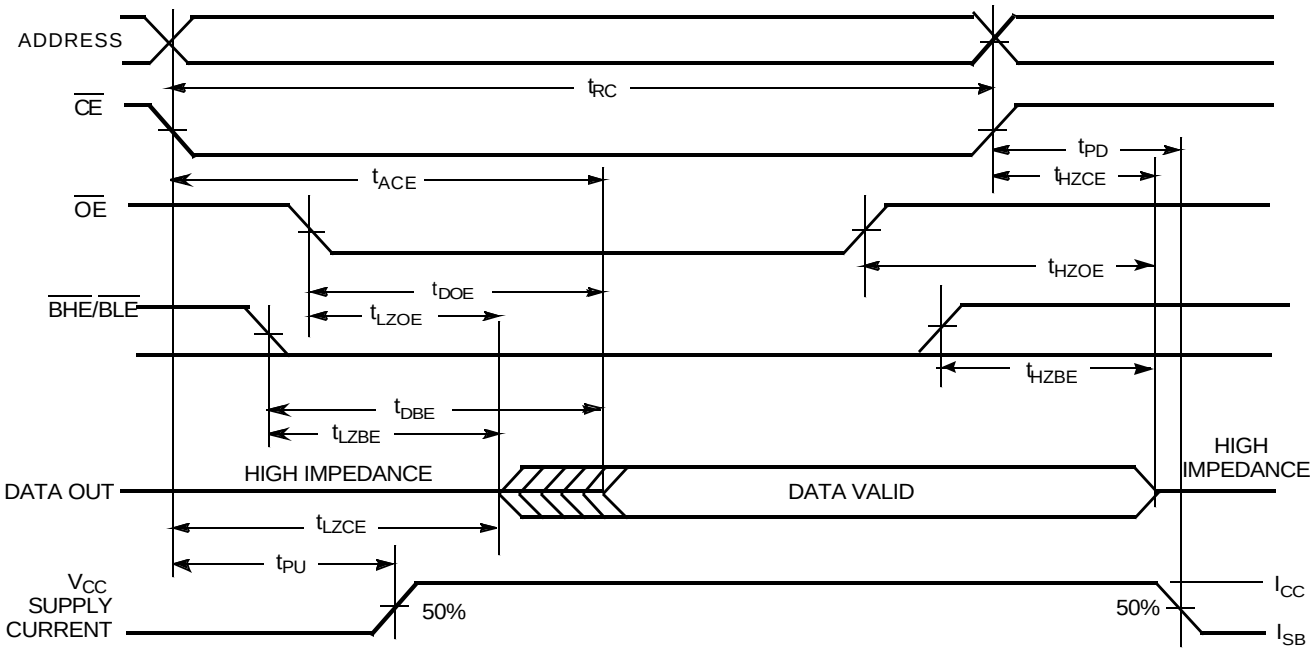

Notes:

13. Device is continuously selected. $\overline{OE}$, $\overline{CE}$ = V_{IL}, $\overline{BHE}$, $\overline{BLE}$ = V_{IL}.
14. $\overline{WE}$ is HIGH for read cycle.
15. Address valid prior to or coincident with $\overline{CE}$, $\overline{BHE}$, $\overline{BLE}$ transition LOW.

Switching Waveforms (continued)

Write Cycle No. 1($\overline{WE}$ Controlled) [12, 16, 17]

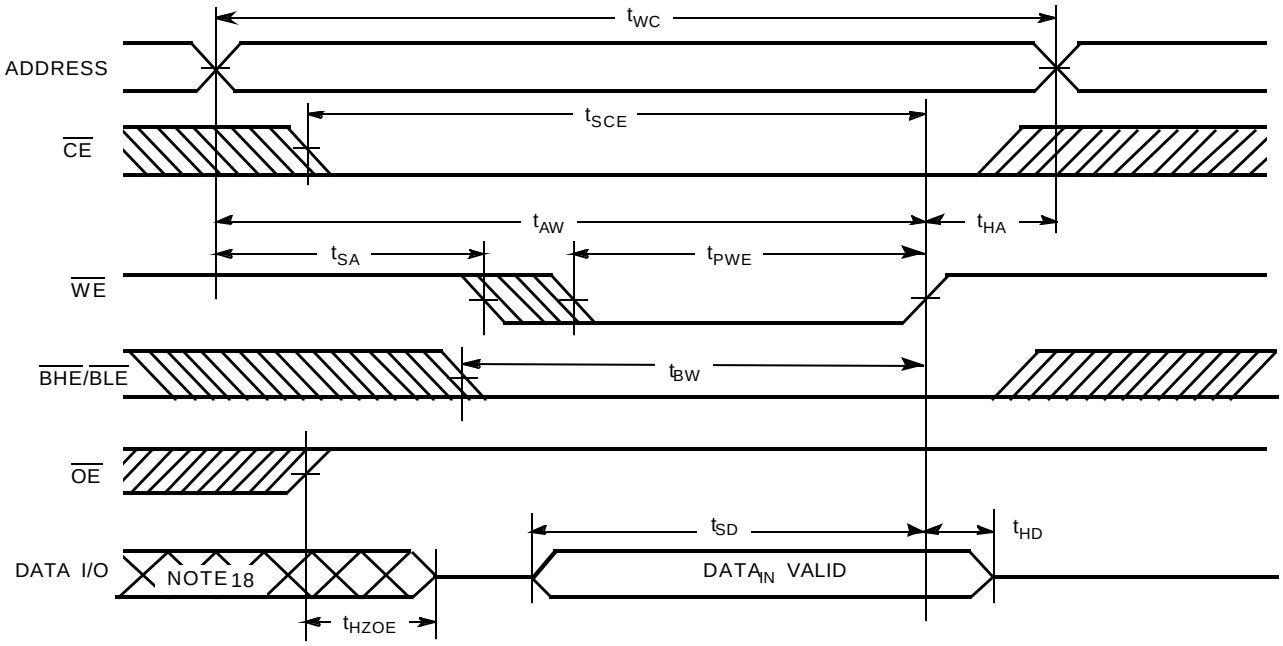

Write Cycle No. 2 ($\overline{CE}$ Controlled) [12, 16, 17]

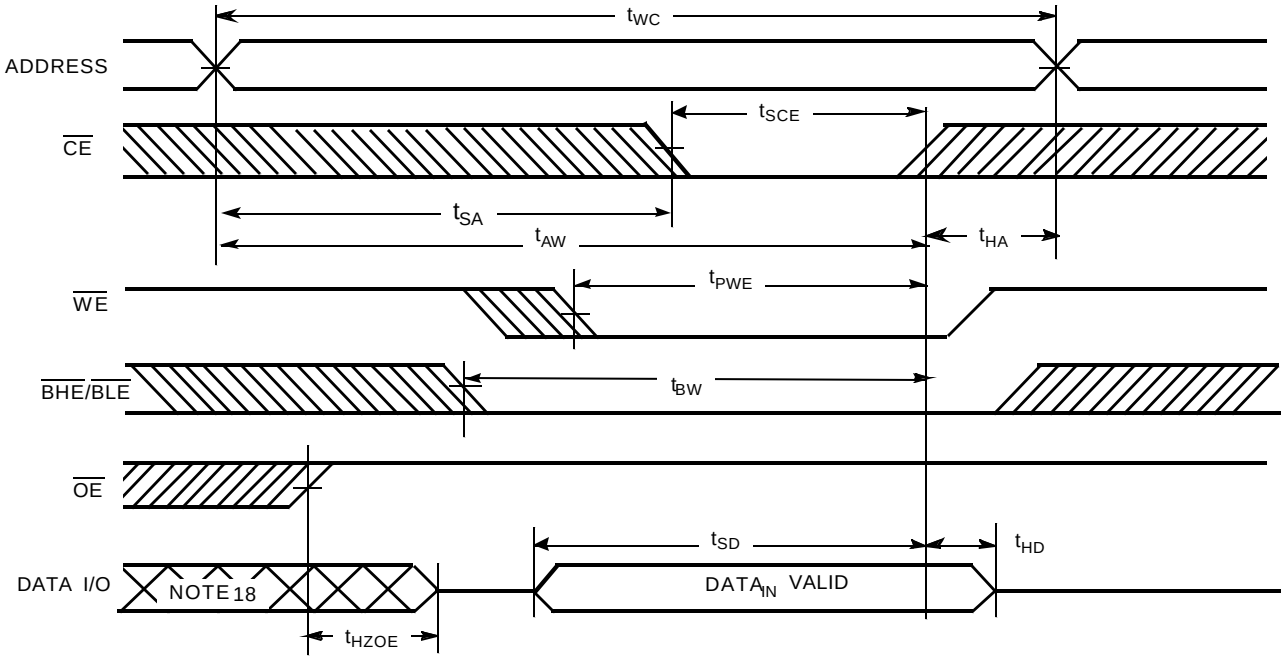

Notes:

16. Data I/O is high-impedance if $\overline{OE} = V_{IH}$.
17. If $\overline{CE}$ goes HIGH simultaneously with $\overline{WE}$ HIGH, the output remains in a high-impedance state.
18. During this period, the I/Os are in output state and input signals should not be applied.

Switching Waveforms (continued)

Write Cycle No. 3 ($\overline{WE}$ Controlled, $\overline{OE}$ LOW)[17]

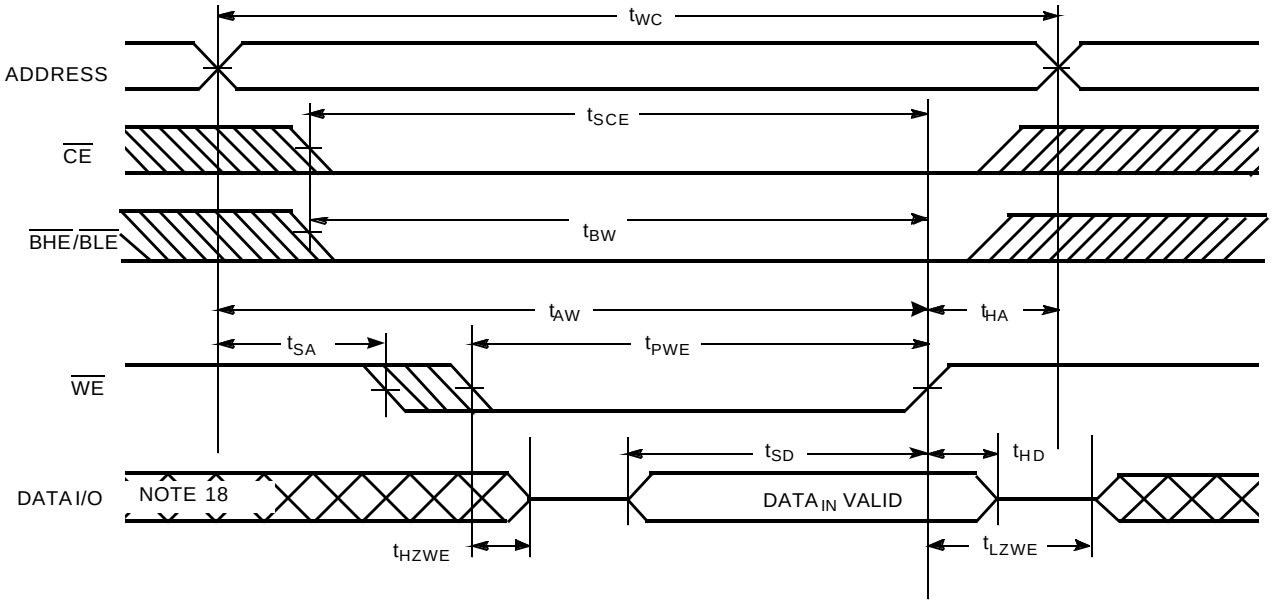

Write Cycle No. 4 ($\overline{BHE}$/$\overline{BLE}$ Controlled, $\overline{OE}$ LOW)[17]

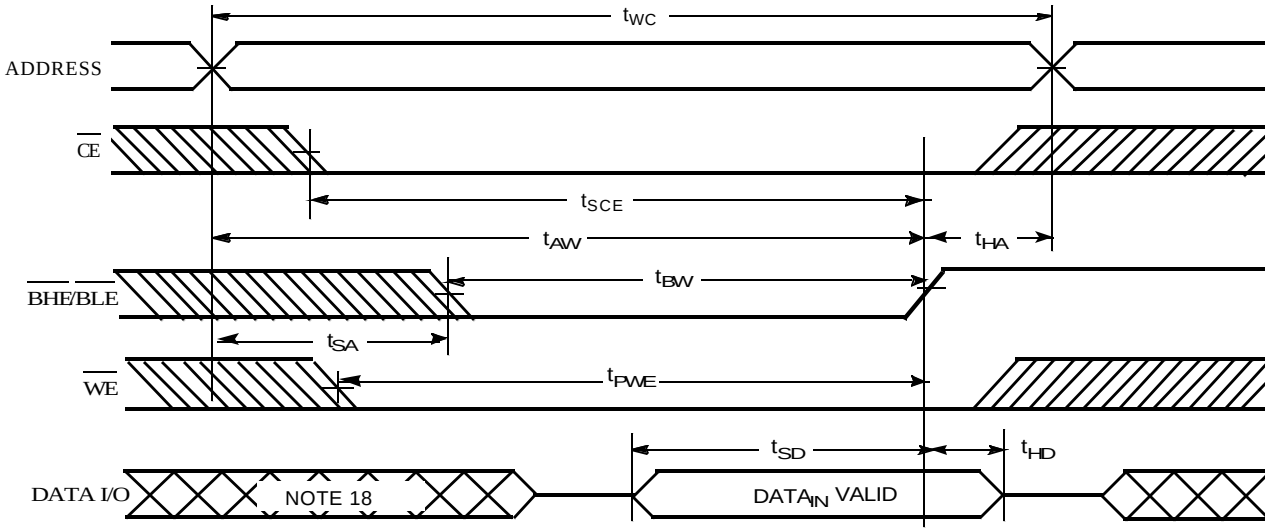

Typical DC and AC Parameters

(Typical values are included for reference only and are not guaranteed or tested. Typical values are measured at $V_{CC} = V_{CC(typ.)}$, $T_A = 25°C$)

Operating Current vs. Supply Voltage

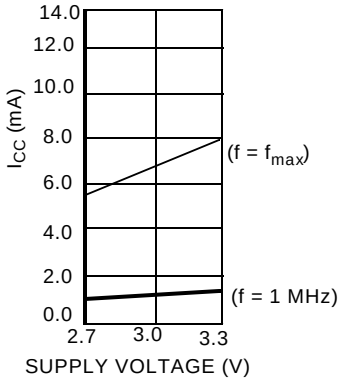

Standby Current vs. Supply Voltage

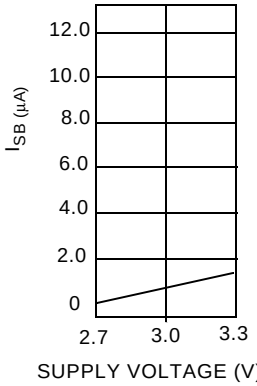

Access Time vs. Supply Voltage

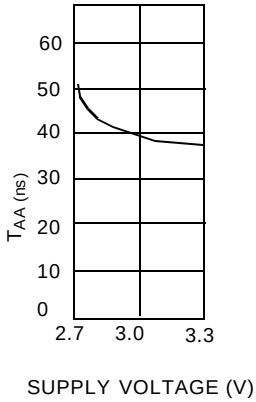

Truth Table

$\overline{CE}$	$\overline{WE}$	$\overline{OE}$	$\overline{BHE}$	$\overline{BLE}$	Inputs/Outputs	Mode	Power
H	X	X	X	X	High Z	Deselect/Power-Down	Standby (I_{SB})
X	X	X	H	H	High Z	Deselect/Power-Down	Standby (I_{SB})
L	H	L	L	L	Data Out (I/O_O–I/O_{15})	Read	Active (I_{CC})
L	H	L	H	L	Data Out (I/O_O–I/O_7); I/O_8–I/O_{15} in High Z	Read	Active (I_{CC})
L	H	L	L	H	Data Out (I/O_8–I/O_{15}); I/O_0–I/O_7 in High Z	Read	Active (I_{CC})
L	H	H	L	L	High Z	Output Disabled	Active (I_{CC})
L	H	H	H	L	High Z	Output Disabled	Active (I_{CC})
L	H	H	L	H	High Z	Output Disabled	Active (I_{CC})
L	L	X	L	L	Data In (I/O_O–I/O_{15})	Write	Active (I_{CC})
L	L	X	H	L	Data In (I/O_O–I/O_7); I/O_8–I/O_{15} in High Z	Write	Active (I_{CC})
L	L	X	L	H	Data In (I/O_8–I/O_{15}); I/O_0–I/O_7 in High Z	Write	Active (I_{CC})

Ordering Information

Speed (ns)	Ordering Code	Package Name	Package Type	Operating Range
70	WCMA2016U4B-FF70	FB48A	48-Ball Fine Pitch BGA	Industrial
55	WCMA2016U4B-FF55			

Package Diagrams

48-Ball (6.0 mm x 8.0 mm x 1.0 mm) Fine Pitch BGA, FB48A

Top View

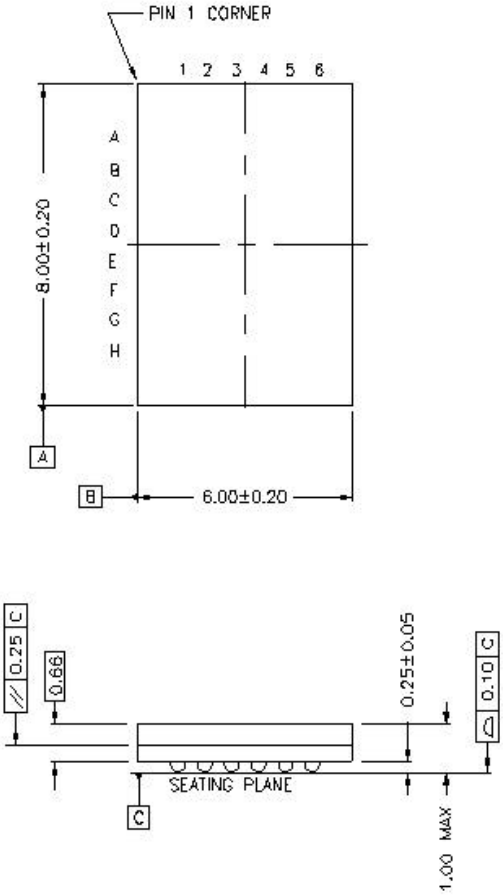

Bottom View

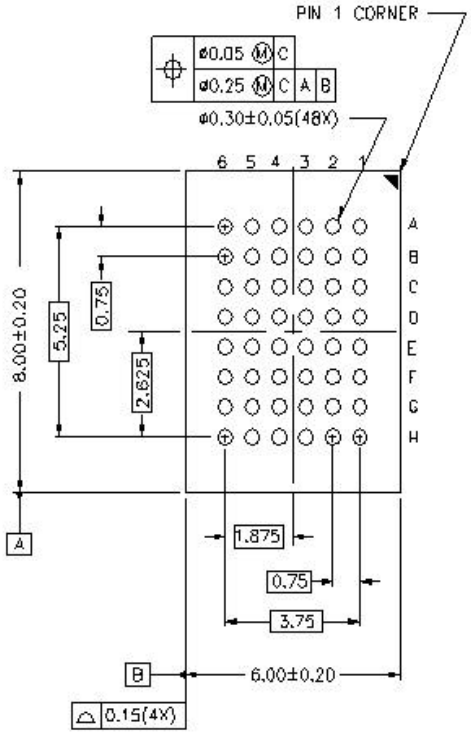

Document Title: WCMA2016U4B, 128K x 16 STATIC RAM					
REV.	**Spec #**	**ECN #**	**Issue Date**	**Orig. of Change**	**Description of Change**
**	38-05320	117494	7/19/02	CBD	New Datasheet

НИОКР СИСТЕМС

ООО «НИОКРсистемс» - это оперативные поставки широкого спектра электронных компонентов отечественного и импортного производства напрямую от производителей и с крупнейших мировых складов. Реализуемая нашей компанией продукция насчитывает более полумиллиона наименований.

Благодаря этому наша компания предлагает к поставке практически не ограниченный ассортимент компонентов как оптовыми, мелкооптовыми партиями, так и в розницу.

Благодаря развитой сети поставщиков, помогаем в поиске и приобретении экзотичных или снятых с производства компонентов.

Наша компания это:

- Гарантия качества поставляемой продукции
- Широкий ассортимент
- Минимальные сроки поставок
- Техническая поддержка
- Подбор комплектации
- Индивидуальный подход
- Гибкое ценообразование
- Работаем по 275 ФЗ

ООО «НИОКР СИТЕМС»
Москва, 125362, Россия, ул. Вишневая, д. 9, к. 1, Блок 104 а и 104 в

Телефон: 8 (495) 268-14-82
Email: n@nsistems.ru

ИНН: 7735154786
ОГРН: 1167746717709