Switched-Capacitor Voltage Converter

FEATURES

- Lowest Output Impedance (Typical 35Ω at V_{IN}=5V).
- Improved Direct Replacement for 7660.
- 1.5V to 6V Operation.
- No External Diode Required.
- Simple Conversion of +5V to -5V.
- Low Quiescent Current (Typical 36μA at V_{IN}=5V).
- High Power Efficiency (Typical 98%)
- Boost Pin for Higher Switching Frequency.
- Improved SCR Latchup Protection.

APPLICATIONS

- RS-232 Power Supplies.
- Handheld Instruments.
- Data Acquisition Systems.
- Supply Splitter, V_{OUT}= ±V_{IN} /2.
- Operational Amplifier Supplies.
- Panel Meter.

TYPICAL APPLICATION CIRCUIT

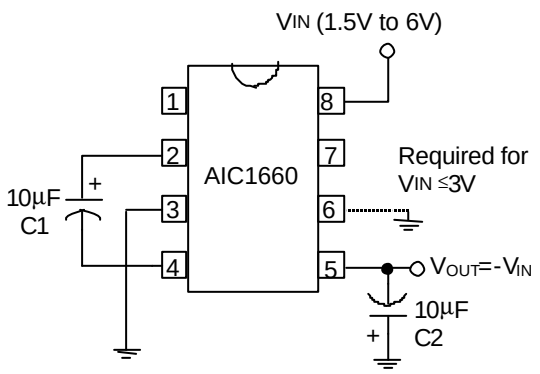

Negative Voltage Converter

DESCRIPTION

The AIC1660 is a monolithic CMOS switched capacitor voltage converter. Designed to be an improved direct replacement for the popular 7660 and LTC1044, the main function of the AIC1660 is to convert a positive input voltage in the range of 1.5V to 6V to the corresponding negative output voltage in the range of -1.5V to -6V. The input voltage can also be doubled (V_{OUT} = 2V_{IN}), divided (V_{OUT} = V_{IN} /2), or multiplied (V_{OUT} = ±nV_{IN}), as shown in application examples.

The chip contains a series DC power supply regulator, oscillator, control circuitry and four output power MOS switches. The frequency of oscillator can be lowered by the addition of an external capacitor to the OSC pin, or the oscillator may be over-driven by an external clock.

The boost function is available to raise the oscillator frequency to optimize performance in specific applications. The "LV" terminal may be tied to GND to improve low input voltage (V_{IN} ≤3V) operation, or be left floating for input voltage larger than 3V to improve power dissipation.

The AIC1660 provides performance superior to previous designs by combining low output impedance, low quiescent current with high efficiency, and by eliminating diode drop voltage losses. The only required external components are two low cost electrolytic capacitors.

ORDERING INFORMATION

AIC1660 CX

PACKAGE TYPE
N: PLASTIC DIP
S: SMALL OUTLINE

ORDER NUMBER	PIN CONFIGURATION
AIC1660CN (PLASTIC DIP)	TOP VIEW 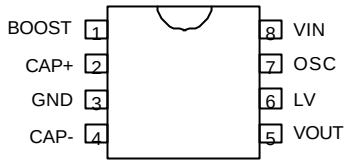
AIC1660CS (PLASTIC SO)	

ABSOLUTE MAXIMUM RATINGS

Supply Voltage 6.0V

Input Voltage on Pin 1, 6 and 7 ..... -0.3V ~V_{IN} + 0.3V

Operating Temperature Range ..... -40°C~+85°C

Storage Temperature Range..... -65°C~150°C

TEST CIRCUIT

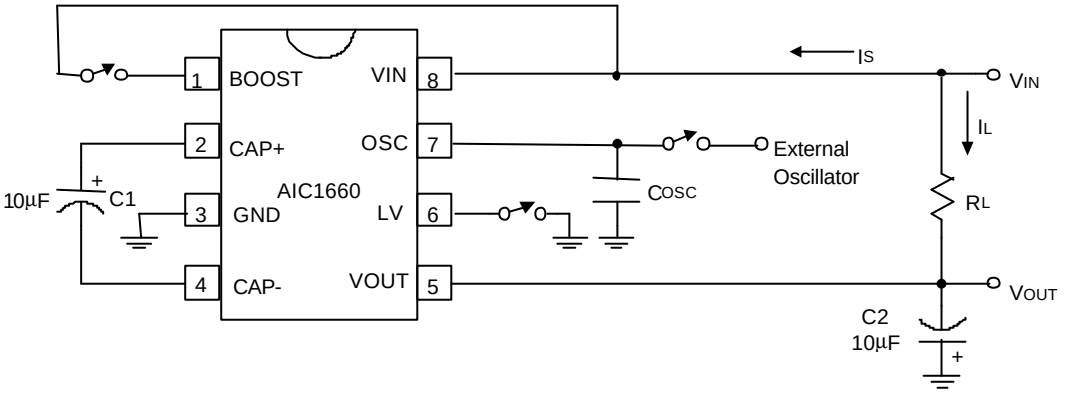

■ ELECTRICAL CHARACTERISTICS (V_{IN}=5.0V, T_A=25°C, OSC=free running, unless otherwise specified.)

PARAMETER	TEST CONDITIONS	SYMBOL	MIN	TYP	MAX	UNIT
Supply Current	$R_L = \infty$	I_S		36	70	μA
Minimum Supply Voltage	$R_L = \infty$	V_{INL}	1.5			V
Maximum Supply Voltage	$R_L = \infty$	V_{INH}			6	V
Output Resistance	I_L =20mA, F_{OSC} =10KHz	R_{OUT}		35	70	Ω
Oscillator Frequency	C_{OSC}=0 Pin 1 Floating or GND Pin 1=V_{IN}	F_{OSC}		 10 50		KHz
Power Efficiency	R_L= 5K, F_{OSC}=10KHz	P_{EFF}	96	98		%
Voltage Conversion Efficiency	$R_L = \infty$	V_{OUTEFF}	98	99.9		%

■ TYPICAL PERFORMANCE CHARACTERISTICS (T_A=25°C)

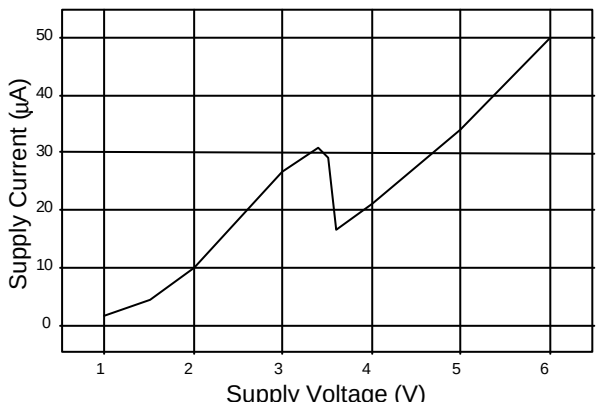

Fig. 1 Supply Current vs. Supply Voltage

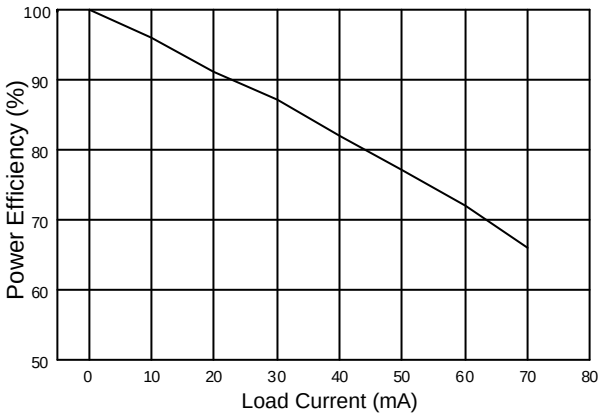

Fig. 2 Power Efficiency vs. Load Current

TYPICAL PERFORMANCE CHARACTERISTICS (Continued)

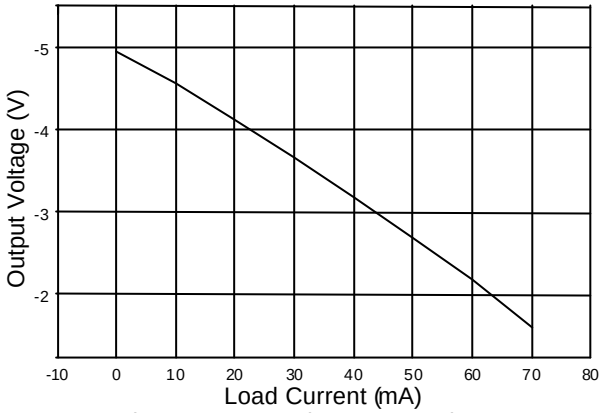

Fig. 3 Output Voltage vs. Load Current

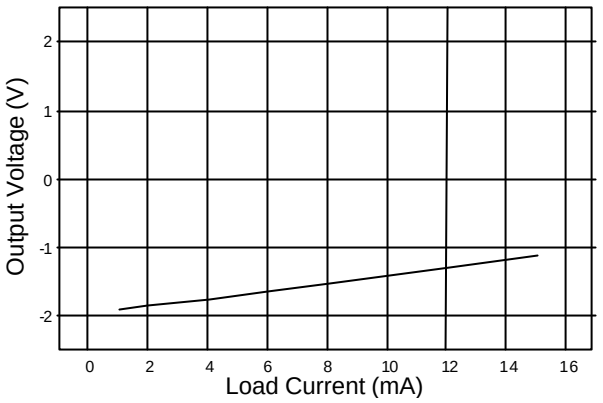

Fig. 4 Power Efficiency vs. Load Current (V_{IN}=2V)

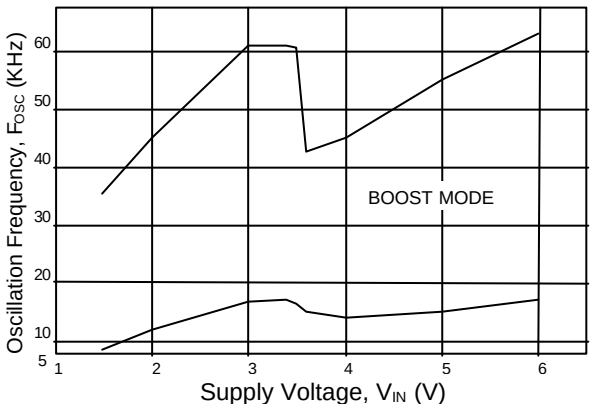

Fig. 5 Oscillator Frequency vs. Supply Voltage

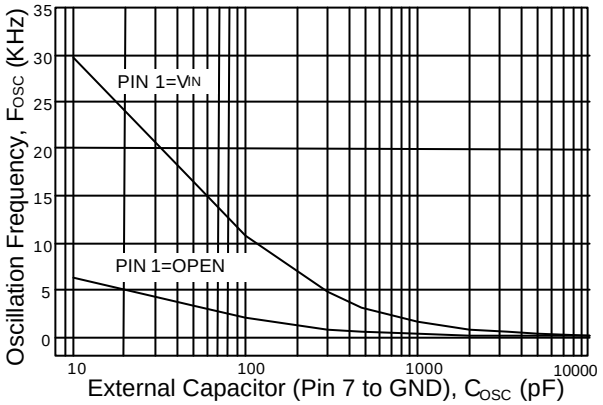

Fig. 6 Oscillator Frequency vs Value of C_{OSC}

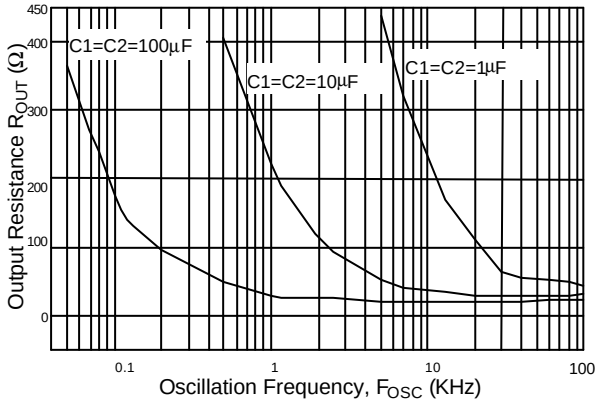

Fig. 7 Output Resistance vs. Oscillation Frequency

BLOCK DIAGRAM

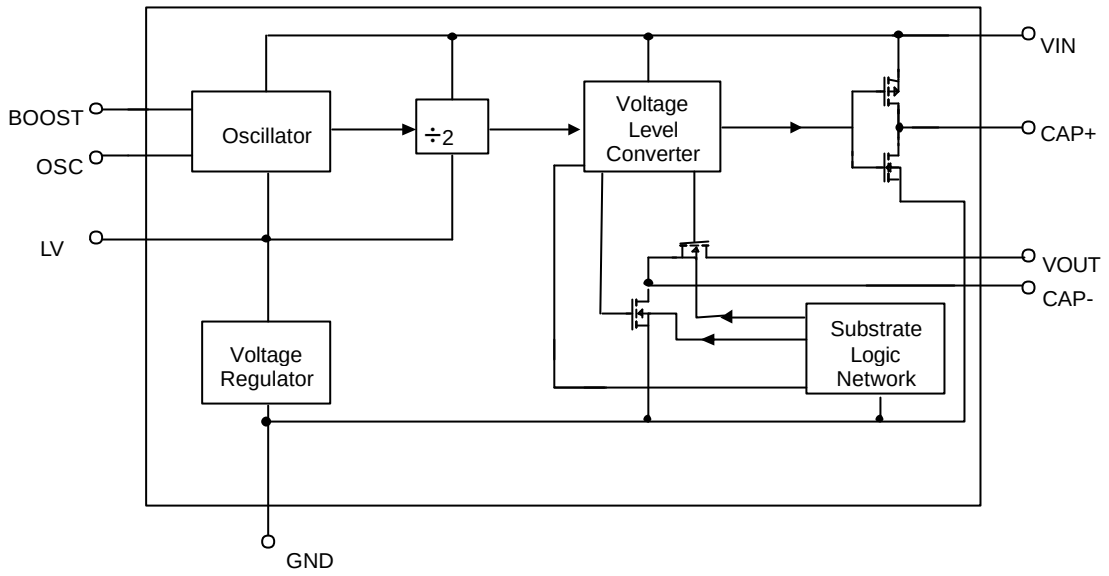

PIN DESCRIPTIONS

PIN 1: BOOST- The frequency of oscillator will be 5 times if boost pin is connected to V_{IN}.

PIN 2: CAP+ - To be connected to the positive side of the flying capacitor.

PIN 3: GND - Ground

PIN 4: CAP- - To be connected to the negative side of flying capacitor.

PIN 5: VOUT - Negative output voltage, typically connected to a 10μF capacitor.

PIN 6: LV - If V_{IN} is below 3V, LV should be tied to GND. For V_{IN} larger than 3V, LV can be floating.

PIN 7: OSC - The frequency of oscillator can be lowered by the addition of an external capacitor to the OSC pin, or the oscillator may be over-driven by an external clock.

PIN 8: VIN - Input supply.

APPLICATION EXAMPLES

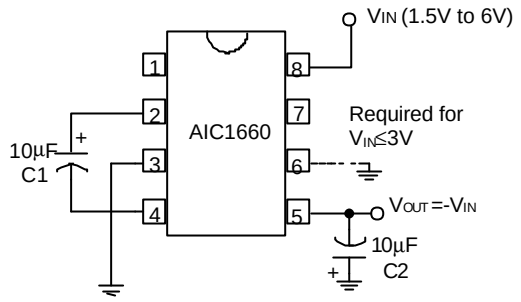

Fig. 8 Negative Voltage Converter

Fig. 8 shows a typical connection, which will provide a negative supply from an available positive supply without the need of any external diodes. The LV pin should be connect to ground for V_{IN}≤3V, or may be "floated" for V_{IN}>3V

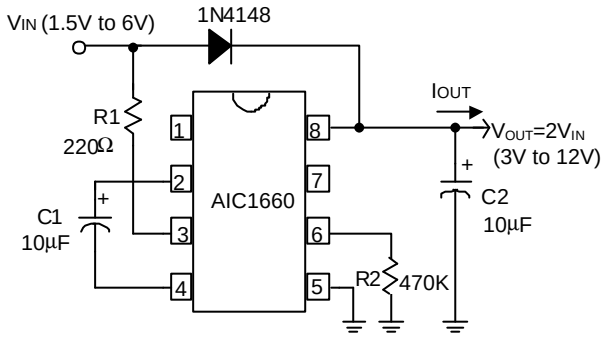

Fig. 9 Voltage Doubling

Fig. 9 shows a method of voltage doubling. Voltage doubling is achieved by simply rearranging the connection of the two external capacitors. An external 470KΩ resistor is required to ensure the oscillator will start.

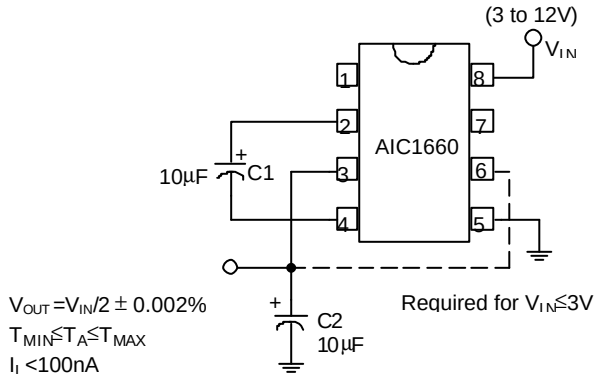

Fig. 10 Ultra Precision Voltage Divider

An ultra precision voltage divider is shown in Fig. 10. To achieve the 0.002% accuracy as indicated, the load current should be kept below 100nA. However, with a slight loss in accuracy, the load current can be increased.

APPLICATION EXAMPLES (Continued)

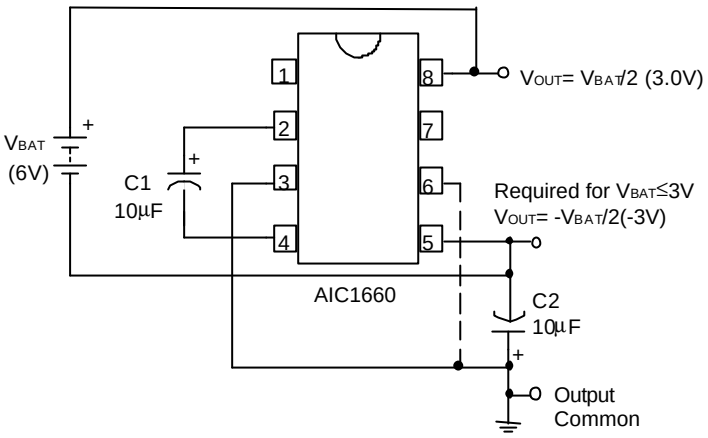

Fig. 11 Battery Splitter

A common need in many systems is to obtain (+) and (-) supplies from a single battery or power supply system. Where current requirements are low, the circuit shown in Fig. 11 is a simple solution.

PHYSICAL DIMENSIONS

- **8 LEAD PLASTIC SO (unit: mm)**

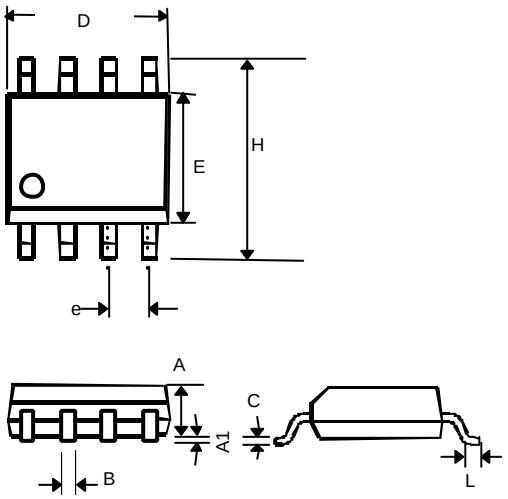

SYMBOL	MIN	MAX
A	1.35	1.75
A1	0.10	0.25
B	0.33	0.51
C	0.19	0.25
D	4.80	5.00
E	3.80	4.00
e	1.27(TYP)	
H	5.80	6.20
L	0.40	1.27

- **8 LEAD PLASTIC DIP (unit: mm)**

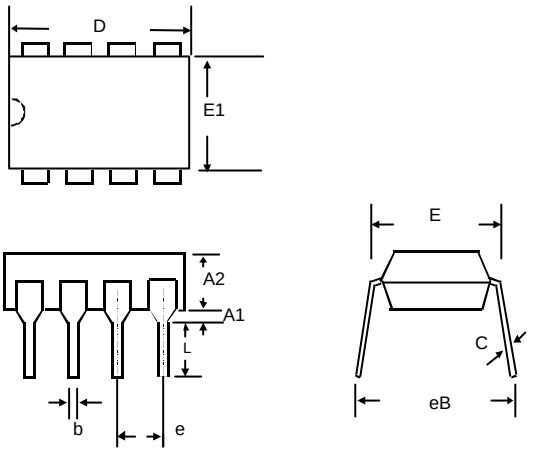

SYMBOL	MIN	MAX
A1	0.381	—
A2	2.92	4.96
b	0.35	0.56
C	0.20	0.36
D	9.01	10.16
E	7.62	8.26
E1	6.09	7.12
e	2.54 (TYP)	
eB	—	10.92
L	2.92	3.81

НИОКР СИСТЕМС

ООО «НИОКРсистемс» - это оперативные поставки широкого спектра электронных компонентов отечественного и импортного производства напрямую от производителей и с крупнейших мировых складов. Реализуемая нашей компанией продукция насчитывает более полумиллиона наименований.

Благодаря этому наша компания предлагает к поставке практически не ограниченный ассортимент компонентов как оптовыми, мелкооптовыми партиями, так и в розницу.

Благодаря развитой сети поставщиков, помогаем в поиске и приобретении экзотичных или снятых с производства компонентов.

Наша компания это:

- Гарантия качества поставляемой продукции
- Широкий ассортимент
- Минимальные сроки поставок
- Техническая поддержка
- Подбор комплектации
- Индивидуальный подход
- Гибкое ценообразование
- Работаем по 275 ФЗ

ООО «НИОКР СИТЕМС»
Москва, 125362, Россия, ул. Вишневая, д. 9, к. 1, Блок 104 а и 104 в

Телефон: 8 (495) 268-14-82
Email: n@nsistems.ru

ИНН: 7735154786
ОГРН: 1167746717709