19-1091; Rev 1; 5/04

EVALUATION KIT AVAILABLE

+3.3V, 622Mbps, SDH/SONET 1:4 Deserializer with LVDS Outputs

General Description

The MAX3681 deserializer is ideal for converting 622Mbps serial data to 4-bit-wide, 155Mbps parallel data in ATM and SDH/SONET applications. Operating from a single +3.3V supply, this device accepts PECL serial clock and data inputs, and delivers low-voltage differential-signal (LVDS) clock and data outputs for interfacing with high-speed digital circuitry. It also provides an LVDS synchronization input that enables data realignment and reframing.

The MAX3681 is available in the extended-industrial temperature range (-40°C to +85°C), in a 24-pin SSOP package.

Applications

622Mbps SDH/SONET Transmission Systems

622Mbps ATM/SONET Access Nodes

Add/Drop Multiplexers

Digital Cross Connects

Features

- ♦ **Single +3.3V Supply**
- ♦ **622Mbps Serial to 155Mbps Parallel Conversion**
- ♦ **265mW Power**
- ♦ **LVDS Data Outputs and Synchronization Inputs**
- ♦ **Synchronization Input for Data Realignment and Reframing**
- ♦ **Differential 3.3V PECL Clock and Data Inputs**

Ordering Information

PART	TEMP RANGE	PIN-PACKAGE
MAX3681EAG	-40°C to +85°C	24 SSOP
MAX3681EAG+	-40°C to +85°C	24 SSOP

+Denotes Lead Free Package

Pin Configuration appears at end of data sheet.

Typical Operating Circuit

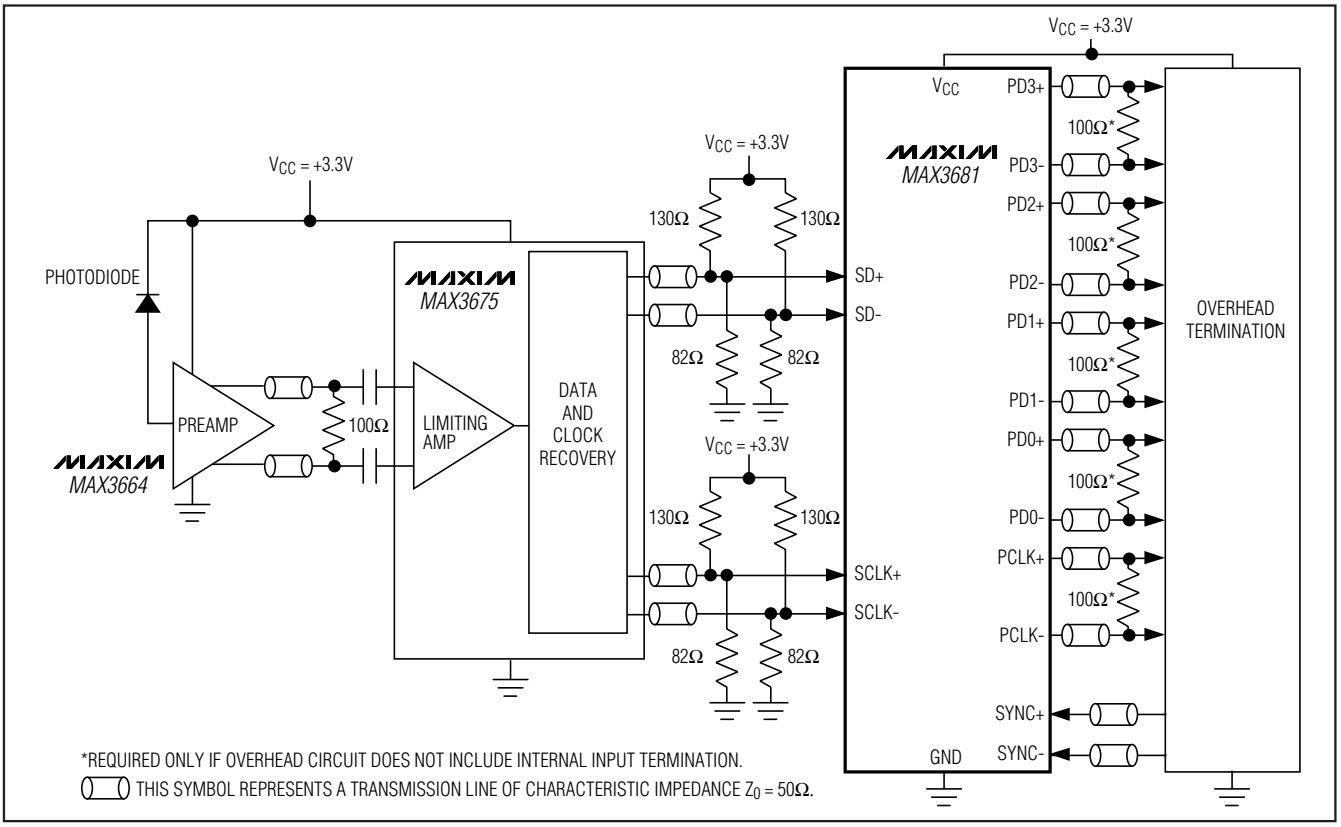

For pricing, delivery, and ordering information, please contact Maxim/Dallas Direct! at 1-888-629-4642, or visit Maxim's website at www.maxim-ic.com.

+3.3V, 622Mbps, SDH/SONET 1:4 Deserializer with LVDS Outputs

ABSOLUTE MAXIMUM RATINGS

Terminal Voltage (with respect to GND)
V_{CC} .....-0.5V to 5V
PECL Inputs (SD+/-, SCLK+/-).....V_{CC} + 0.5V
LVDS Inputs (SYNC+/-).....V_{CC} + 0.5V
Output Current, LVDS Outputs (PCLK+/-, PD_+/-).....10mA

Continuous Power Dissipation (T_A = +85°C)
SSOP (derate 8.00mW/°C above +85°C) 520mW
Operating Temperature Range .....-40°C to +85°C
Storage Temperature Range .....-65°C to +160°C
Lead Temperature (soldering, 10sec) .....+300°C

Stresses beyond those listed under "Absolute Maximum Ratings" may cause permanent damage to the device. These are stress ratings only, and functional operation of the device at these or any other conditions beyond those indicated in the operational sections of the specifications is not implied. Exposure to absolute maximum rating conditions for extended periods may affect device reliability.

DC ELECTRICAL CHARACTERISTICS

(V_{CC} = +3.0V to +3.6V, differential loads = 100Ω, T_A = -40°C to +85°C, unless otherwise noted. Typical values are at V_{CC} = +3.3V, T_A = +25°C.)

PARAMETER	SYMBOL	CONDITIONS	MIN	TYP	MAX	UNITS
Supply Current	I_{CC}		55	80	120	mA
PECL INPUTS (SD+/-, SCLK+/-)						
Input High Voltage	V_{IH}		V_{CC} - 1.16		V_{CC} - 0.88	V
Input Low Voltage	V_{IL}		V_{CC} - 1.81		V_{CC} - 1.48	V
Input High Current	I_{IH}	$V_{IN} = V_{IH(MAX)}$	-10		10	µA
Input Low Current	I_{IL}	$V_{IN} = V_{IL(MAX)}$	-10		10	µA
LVDS INPUTS AND OUTPUTS (SYNC+/-, PCLK+/-, PD_+/-)						
Input Voltage Range	V_I	Differential input voltage = 100mV	0		2.4	V
Differential Input Threshold	V_{IDTH}	Common-mode voltage = 50mV	-100		100	mV
Threshold Hysteresis	V_{HYST}			70		mV
Differential Input Resistance	R_{IN}		85	100	115	Ω
Output High Voltage	V_{OH}				1.475	V
Output Low Voltage	V_{OL}		0.925			V
Differential Output Voltage	V_{OD}		250		400	mV
Change in Magnitude of Differential Output Voltage for Complementary States	ΔV_{OD}				25	mV
Output Offset Voltage	V_{OS}	T_A = +25°C	1.125		1.275	V
Change in Magnitude of Output Offset Voltage for Complementary States	ΔV_{OS}				25	mV
Single-Ended Output Resistance	R_O		40	70	140	Ω
Change in Magnitude of Single-Ended Output Resistance for Complementary States	ΔR_O			±1	±10	%

AC ELECTRICAL CHARACTERISTICS

(V_{CC} = +3.0V to +3.6V, differential loads = 100Ω, T_A = +25°C, unless otherwise noted.) (Note 1)

PARAMETER	SYMBOL	CONDITIONS	MIN	TYP	MAX	UNITS
Maximum Serial Clock Frequency	f_{SCLK}		622			MHz
Serial Data Setup Time	t_{SU}		800			ps
Serial Data Hold Time	t_H		50			ps
Parallel Clock to Data Output Delay	t_{CLK-Q}		200	550	900	ps

Note 1: AC Characteristics guaranteed by design and characterization.

+3.3V, 622Mbps, SDH/SONET 1:4 Deserializer with LVDS Outputs

Typical Operating Characteristics

(V_{CC} = +3.0V to +3.6V, differential loads = 100Ω, unless otherwise noted.)

MAXIMUM SERIAL CLOCK FREQUENCY vs. TEMPERATURE

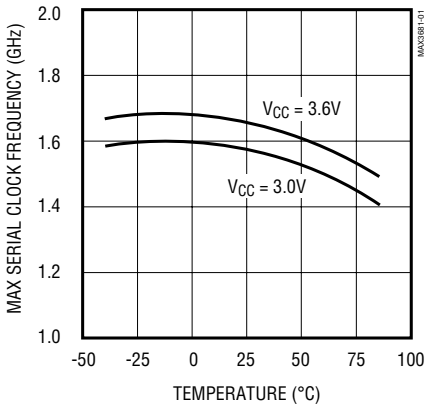

SERIAL DATA-SETUP TIME vs. TEMPERATURE

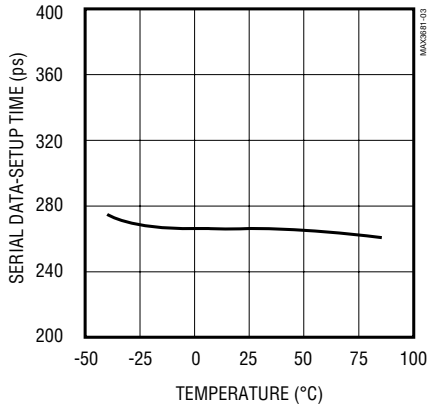

SERIAL DATA-HOLD TIME vs. TEMPERATURE

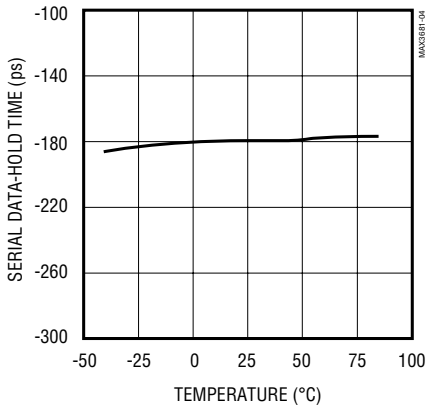

SUPPLY CURRENT vs. TEMPERATURE

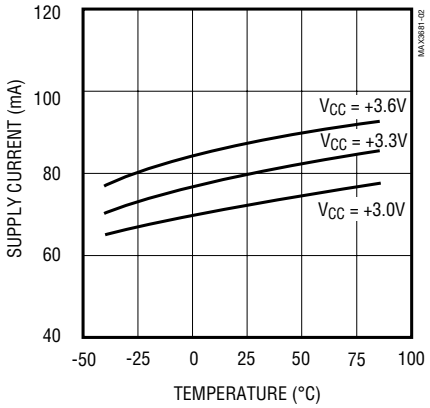

PARALLEL CLOCK TO DATA OUTPUT PROPAGATION DELAY vs. TEMPERATURE

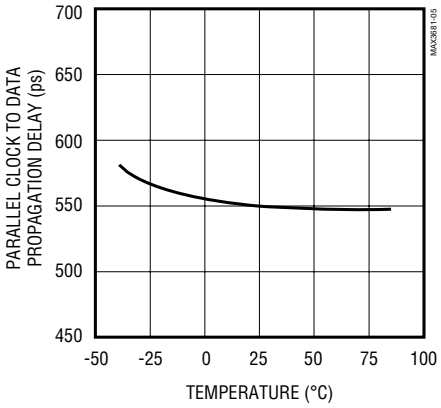

+3.3V, 622Mbps, SDH/SONET 1:4 Deserializer with LVDS Outputs

Pin Description

PIN	NAME	FUNCTION
1, 2, 5, 8, 12	V_{CC}	+3.3V Supply Voltage
3	SD+	Noninverting PECL Serial Data Input. Data is clocked on the SCLK signal's positive transition.
4	SD-	Inverting PECL Serial Data Input. Data is clocked on the SCLK signal's positive transition.
6	SCLK+	Noninverting PECL Serial Clock Input
7	SCLK-	Inverting PECL Serial Clock Input
9, 15, 22	GND	Ground
10	SYNC+	Noninverting LVDS Synchronizing Pulse Input. Pulse the SYNC signal high for at least two SCLK periods to shift the data alignment by dropping one bit.
11	SYNC-	Inverting LVDS Synchronizing Pulse Input. Pulse the SYNC signal high for at least two SCLK periods to shift the data alignment by dropping one bit.
13	PCLK-	Inverting LVDS Parallel Clock Output
14	PCLK+	Noninverting LVDS Parallel Clock Output
16, 18, 20, 23	PD0- to PD3-	Inverting LVDS Parallel Data Outputs. Data is updated on the positive transition of the PCLK signal. See Figure 2 for the relationship between serial-data-bit position and output-data-bit assignment.
17, 19, 21, 24	PD0+ to PD3+	Noninverting LVDS Parallel Data Outputs. Data is updated on the positive transition of the PCLK signal. See Figure 2 for the relationship between serial-data-bit position and output-data-bit assignment.

Detailed Description

The MAX3681 deserializer uses a 4-bit shift register, 4-bit parallel output register, 2-bit counter, PECL input buffers, and low-voltage differential-signal (LVDS) input/output buffers to convert 622Mbps serial data to 4-bit-wide, 155Mbps parallel data (Figure 1).

The input shift register continuously clocks incoming data on the positive transition of the serial clock (SCLK) input signal. The 2-bit counter generates a parallel output clock (PCLK) by dividing down the serial clock frequency. The PCLK signal is used to clock the parallel output register. During normal operation, the counter divides the SCLK frequency by four, causing the output register to latch every four bits of incoming serial data.

The synchronization inputs (SYNC+, SYNC-) are used for data realignment and reframing. When the SYNC signal is pulsed high for at least two SCLK cycles, the parallel output data is delayed by one SCLK cycle. This realignment is guaranteed to occur within two PCLK cycles of the SYNC signal's positive transition. As a result, the first incoming bit of data during that PCLK cycle is dropped, shifting the alignment between PCLK and data by one bit.

See Figure 2 for the functional timing diagram and Figure 3 for the timing parameters diagram.

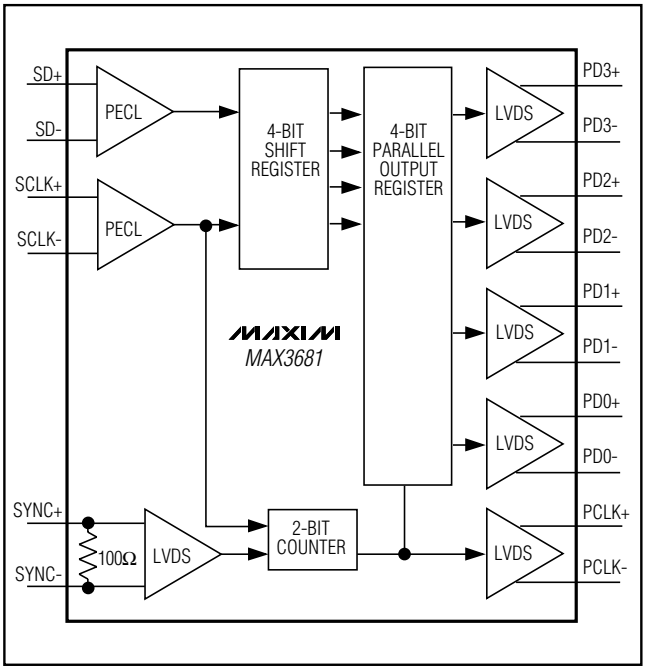

Figure 1. Functional Diagram

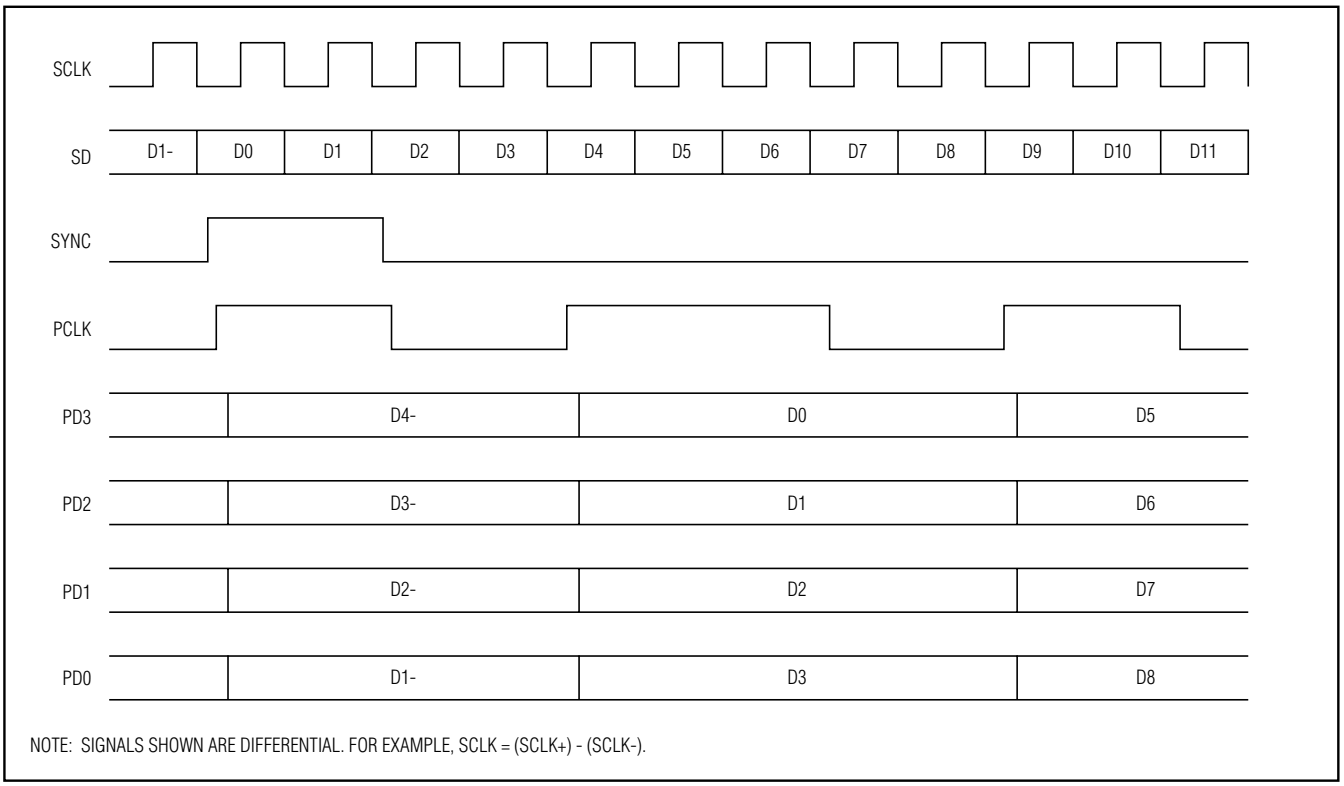

Figure 2. Functional Timing Diagram

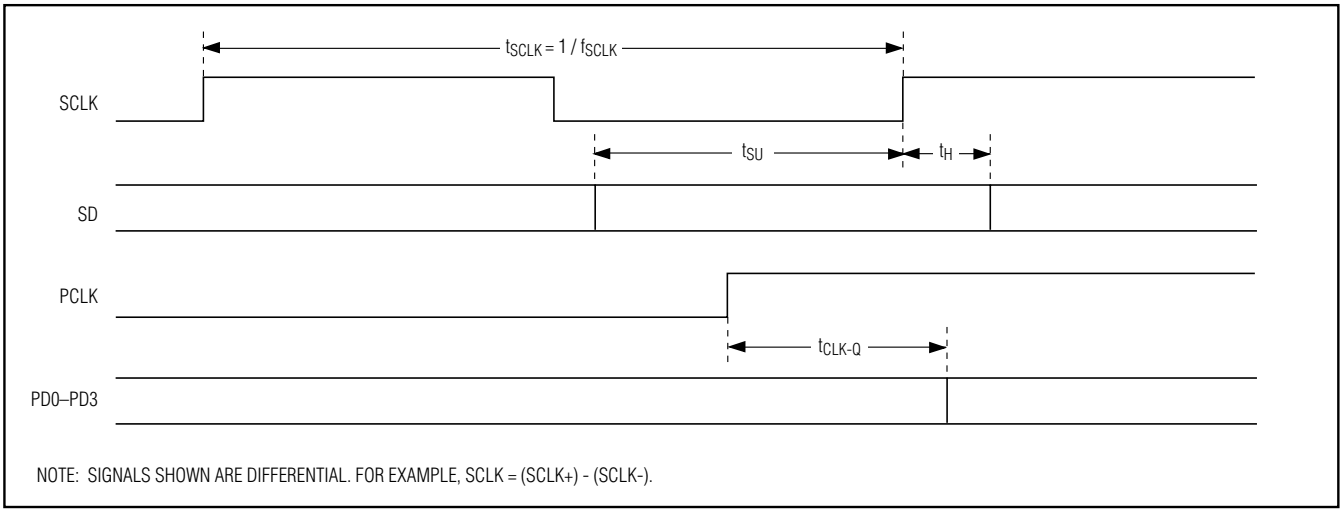

Figure 3. Timing Parameters

+3.3V, 622Mbps, SDH/SONET 1:4 Deserializer with LVDS Outputs

Low-Voltage Differential-Signal (LVDS) Inputs and Outputs

The MAX3681 features LVDS inputs and outputs for interfacing with high-speed digital circuitry. The LVDS standard is based on the IEEE 1596.3 LVDS specification. This technology uses 250mVp-p to 400mVp-p, differential low-voltage swings to achieve fast transition times, minimized power dissipation, and noise immunity.

The parallel clock and data LVDS outputs (PCLK+, PCLK-, PD_+, PD_-) require 100Ω differential DC termination between the inverting and noninverting outputs for proper operation. Do not terminate these outputs to ground.

The synchronization LVDS inputs (SYNC+, SYNC-) are internally terminated with 100Ω of differential input resistance, and therefore do not require external termination.

PECL Inputs

The serial data and clock PECL inputs (SD+, SD-, SCLK+, SCLK-) require 50Ω termination to (V_{CC} - 2V) when interfacing with a PECL source (see the *Alternative PECL Input Termination* section).

Applications Information

Alternative PECL Input Termination

Figure 4 shows alternative PECL input-termination methods. Use Thevenin-equivalent termination when a (V_{CC} - 2V) termination voltage is not available. If AC coupling is necessary, such as when interfacing with an ECL-output device, use the ECL AC-coupling termination.

Layout Techniques

For best performance, use good high-frequency layout techniques. Filter voltage supplies and keep ground connections short. Use multiple vias where possible. Also, use controlled impedance transmission lines to interface with the MAX3681 data inputs and outputs.

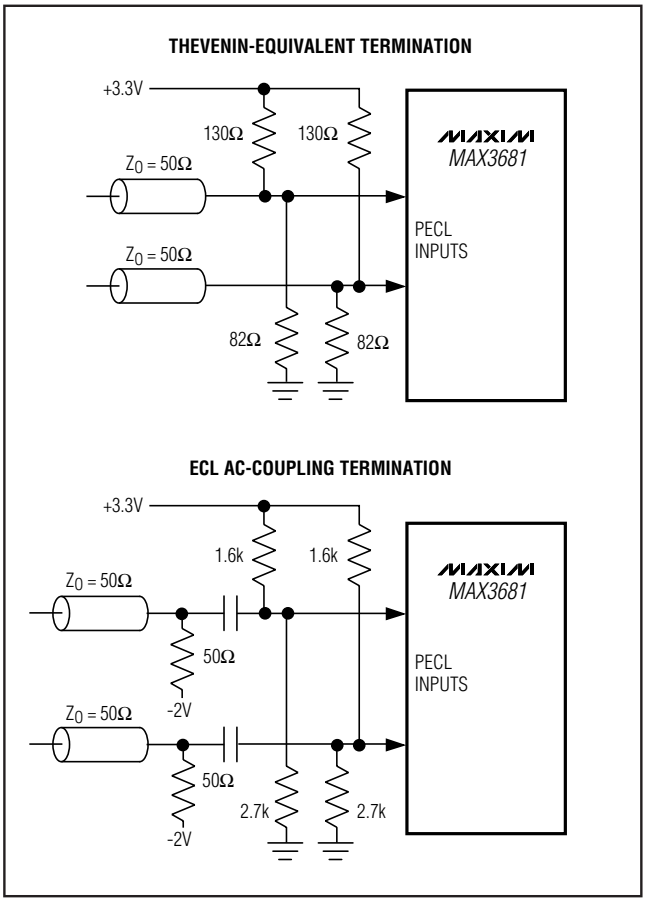

Figure 4. Alternative PECL Input Termination

+3.3V, 622Mbps, SDH/SONET 1:4 Deserializer with LVDS Outputs

Pin Configuration

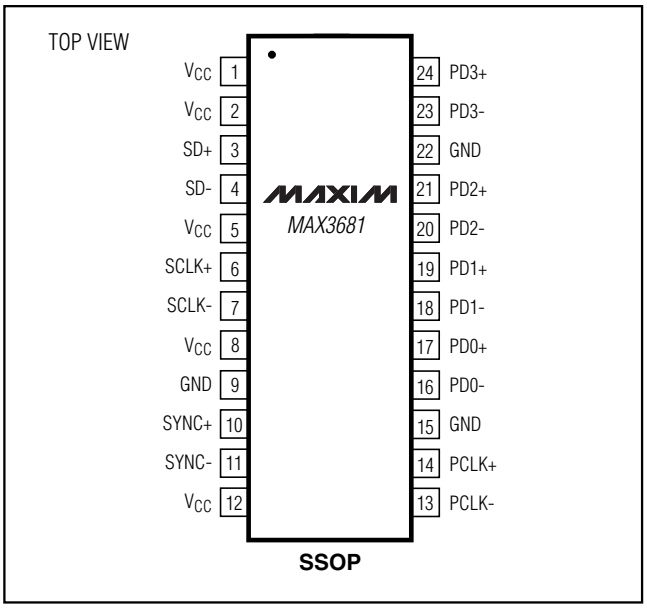

Chip Information

TRANSISTOR COUNT: 724

+3.3V, 622Mbps, SDH/SONET 1:4 Deserializer with LVDS Outputs

Package Information

(The package drawing(s) in this data sheet may not reflect the most current specifications. For the latest package outline information go to **www.maxim-ic.com/packages**.)

SSOP.EPS

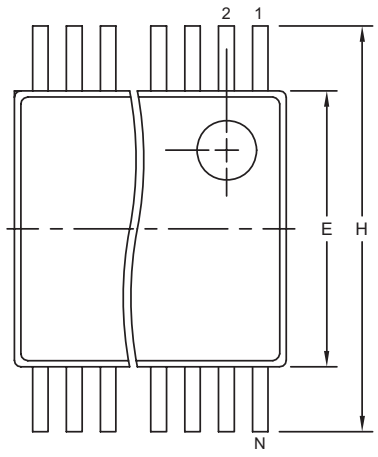

	INCHES		MILLIMETERS	
DIM	MIN	MAX	MIN	MAX
A	0.068	0.078	1.73	1.99
A1	0.002	0.008	0.05	0.21
B	0.010	0.015	0.25	0.38
C	0.004	0.008	0.09	0.20
D	SEE VARIATIONS			
E	0.205	0.212	5.20	5.38
e	0.0256 BSC		0.65 BSC	
H	0.301	0.311	7.65	7.90
L	0.025	0.037	0.63	0.95
α	0∞	8∞	0∞	8∞

	INCHES		MILLIMETERS		
	MIN	MAX	MIN	MAX	N
D	0.239	0.249	6.07	6.33	14L
D	0.239	0.249	6.07	6.33	16L
D	0.278	0.289	7.07	7.33	20L
D	0.317	0.328	8.07	8.33	24L
D	0.397	0.407	10.07	10.33	28L

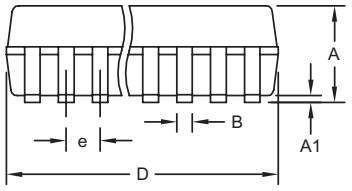

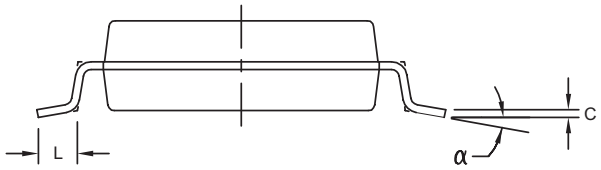

NOTES:
1. D&E DO NOT INCLUDE MOLD FLASH.
2. MOLD FLASH OR PROTRUSIONS NOT TO EXCEED .15 MM (.006").
3. CONTROLLING DIMENSION: MILLIMETERS.
4. MEETS JEDEC MO150.
5. LEADS TO BE COPLANAR WITHIN 0.10 MM.

DALLAS SEMICONDUCTOR MAXIM
PROPRIETARY INFORMATION

TITLE: PACKAGE OUTLINE, SSOP, 5.3 MM

APPROVAL	DOCUMENT CONTROL NO.	REV.	
	21-0056	C	1/1

Maxim cannot assume responsibility for use of any circuitry other than circuitry entirely embodied in a Maxim product. No circuit patent licenses are implied. Maxim reserves the right to change the circuitry and specifications without notice at any time.

© 1996 Maxim Integrated Products Printed USA MAXIM is a registered trademark of Maxim Integrated Products.

НИОКР СИСТЕМС

ООО «НИОКРсистемс» - это оперативные поставки широкого спектра электронных компонентов отечественного и импортного производства напрямую от производителей и с крупнейших мировых складов. Реализуемая нашей компанией продукция насчитывает более полумиллиона наименований.

Благодаря этому наша компания предлагает к поставке практически не ограниченный ассортимент компонентов как оптовыми, мелкооптовыми партиями, так и в розницу.

Благодаря развитой сети поставщиков, помогаем в поиске и приобретении экзотичных или снятых с производства компонентов.

Наша компания это:

- Гарантия качества поставляемой продукции
- Широкий ассортимент
- Минимальные сроки поставок
- Техническая поддержка
- Подбор комплектации
- Индивидуальный подход
- Гибкое ценообразование
- Работаем по 275 ФЗ

ООО «НИОКР СИТЕМС»
Москва, 125362, Россия, ул. Вишневая, д. 9, к. 1, Блок 104 а и 104 в

Телефон: 8 (495) 268-14-82
Email: n@nsistems.ru

ИНН: 7735154786
ОГРН: 1167746717709