FAIRCHILD SEMICONDUCTOR™

January 2009

QFET®

FQD3P50 / FQU3P50

500V P-Channel MOSFET

General Description

These P-Channel enhancement mode power field effect transistors are produced using Fairchild's proprietary, planar stripe, DMOS technology.
This advanced technology has been especially tailored to minimize on-state resistance, provide superior switching performance, and withstand high energy pulse in the avalanche and commutation mode. These devices are well suited for electronic lamp ballast based on complimentary half bridge.

Features

- -2.1A, -500V, $R_{DS(on)}$ = 4.9Ω @V_{GS} = -10 V
- Low gate charge (typical 18 nC)
- Low Crss (typical 9.5 pF)
- Fast switching
- 100% avalanche tested
- Improved dv/dt capability
- RoHS Compliant

D-PAK
FQD Series

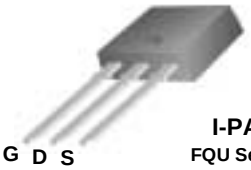

I-PAK
FQU Series

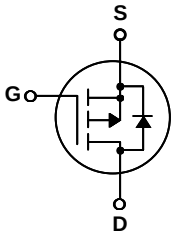

Absolute Maximum Ratings

T_C = 25°C unless otherwise noted

Symbol	Parameter		FQD3P50 / FQU3P50	Units
V_{DSS}	Drain-Source Voltage		-500	V
I_D	Drain Current - Continuous (T_C = 25°C)		-2.1	A
	- Continuous (T_C = 100°C)		-1.33	A
I_{DM}	Drain Current - Pulsed	(Note 1)	-8.4	A
V_{GSS}	Gate-Source Voltage		± 30	V
E_{AS}	Single Pulsed Avalanche Energy	(Note 2)	250	mJ
I_{AR}	Avalanche Current	(Note 1)	-2.1	A
E_{AR}	Repetitive Avalanche Energy	(Note 1)	5.0	mJ
dv/dt	Peak Diode Recovery dv/dt	(Note 3)	-4.5	V/ns
P_D	Power Dissipation (T_A = 25°C) *		2.5	W
	Power Dissipation (T_C = 25°C)		50	W
	- Derate above 25°C		0.4	W/°C
T_J, T_{STG}	Operating and Storage Temperature Range		-55 to +150	°C
T_L	Maximum lead temperature for soldering purposes, 1/8" from case for 5 seconds		300	°C

Thermal Characteristics

Symbol	Parameter	Typ	Max	Units
$R_{\theta JC}$	Thermal Resistance, Junction-to-Case	--	2.5	°C/W
$R_{\theta JA}$	Thermal Resistance, Junction-to-Ambient *	--	50	°C/W
$R_{\theta JA}$	Thermal Resistance, Junction-to-Ambient	--	110	°C/W

* When mounted on the minimum pad size recommended (PCB Mount)

©2009 Fairchild Semiconductor Internati

Elerical Characteristics

T_C = 25°C unless otherwise noted

Symbol	Parameter	Test Conditions	Min	Typ	Max	Units
Off Characteristics						
BV_{DSS}	Drain-Source Breakdown Voltage	V_{GS} = 0 V, I_D = -250 μA	-500	--	--	V
ΔBV_{DSS} / ΔT_J	Breakdown Voltage Temperature Coefficient	I_D = -250 μA, Referenced to 25°C	--	0.42	--	V/°C
I_{DSS}	Zero Gate Voltage Drain Current	V_{DS} = -500 V, V_{GS} = 0 V	--	--	-1	μA
		V_{DS} = -400 V, T_C = 125°C	--	--	-10	μA
I_{GSSF}	Gate-Body Leakage Current, Forward	V_{GS} = -30 V, V_{DS} = 0 V	--	--	-100	nA
I_{GSSR}	Gate-Body Leakage Current, Reverse	V_{GS} = 30 V, V_{DS} = 0 V	--	--	100	nA
On Characteristics						
$V_{GS(th)}$	Gate Threshold Voltage	V_{DS} = V_{GS}, I_D = -250 μA	-3.0	--	-5.0	V
$R_{DS(on)}$	Static Drain-Source On-Resistance	V_{GS} = -10 V, I_D = -1.05 A	--	3.9	4.9	Ω
g_{FS}	Forward Transconductance	V_{DS} = -50 V, I_D = -1.05 A (Note 4)	--	2.1	--	S
Dynamic Characteristics						
C_{iss}	Input Capacitance	V_{DS} = -25 V, V_{GS} = 0 V, f = 1.0 MHz	--	510	660	pF
C_{oss}	Output Capacitance		--	70	90	pF
C_{rss}	Reverse Transfer Capacitance		--	9.5	12	pF
Switching Characteristics						
$t_{d(on)}$	Turn-On Delay Time	V_{DD} = -250 V, I_D = -2.7 A, R_G = 25 Ω (Note 4, 5)	--	12	35	ns
t_r	Turn-On Rise Time		--	56	120	ns
$t_{d(off)}$	Turn-Off Delay Time		--	35	80	ns
t_f	Turn-Off Fall Time		--	45	100	ns
Q_g	Total Gate Charge	V_{DS} = -400 V, I_D = -2.7 A, V_{GS} = -10 V (Note 4, 5)	--	18	23	nC
Q_{gs}	Gate-Source Charge		--	3.6	--	nC
Q_{gd}	Gate-Drain Charge		--	9.2	--	nC
Drain-Source Diode Characteristics and Maximum Ratings						
I_S	Maximum Continuous Drain-Source Diode Forward Current		--	--	-2.1	A
I_{SM}	Maximum Pulsed Drain-Source Diode Forward Current		--	--	-8.4	A
V_{SD}	Drain-Source Diode Forward Voltage	V_{GS} = 0 V, I_S = -2.1 A	--	--	-5.0	V
t_{rr}	Reverse Recovery Time	V_{GS} = 0 V, I_S = -2.7 A, dI_F / dt = 100 A/μs (Note 4)	--	270	--	ns
Q_{rr}	Reverse Recovery Charge		--	1.5	--	μC

Notes:
1. Repetitive Rating : Pulse width limited by maximum junction temperature
2. L = 102mH, I_{AS} = -2.1A, V_{DD} = -50V, R_G = 25 Ω, Starting T_J = 25°C
3. $I_{SD} \leq$ -2.7A, di/dt $\leq$ 200A/μs, $V_{DD} \leq BV_{DSS,}$ Starting T_J = 25°C
4. Pulse Test : Pulse width $\leq$ 300μs, Duty cycle $\leq$ 2%
5. Essentially independent of operating temperature

©2009 Fairchild Semiconductor International

Typical Characteristics

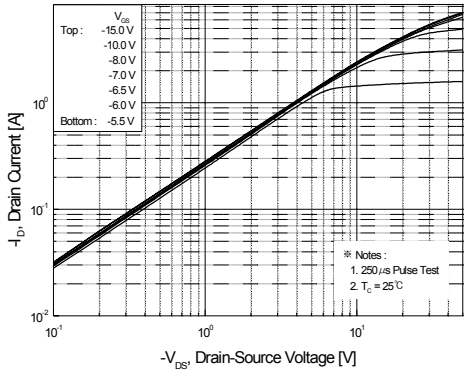

Figure 1. On-Region Characteristics

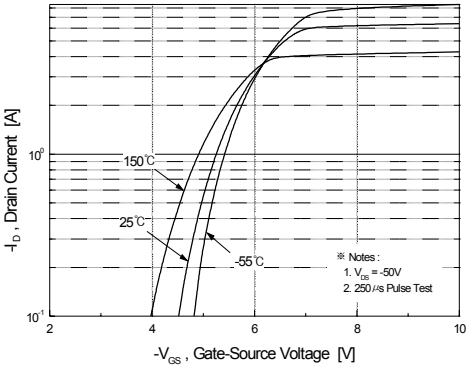

Figure 2. Transfer Characteristics

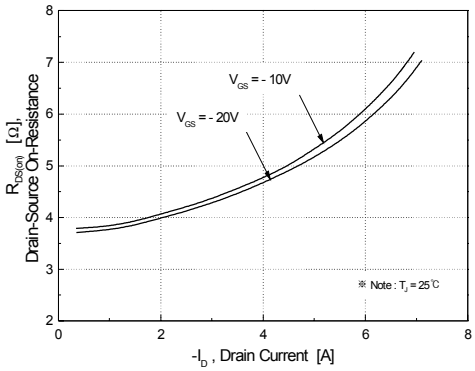

Figure 3. On-Resistance Variation vs. Drain Current and Gate Voltage

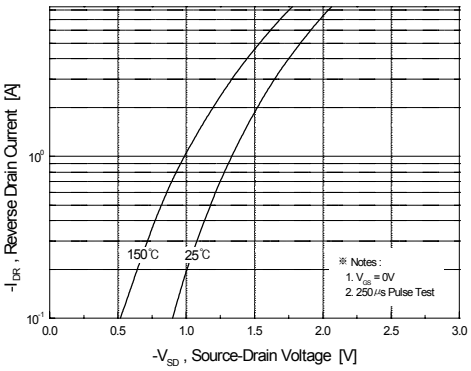

Figure 4. Body Diode Forward Voltage Variation vs. Source Current and Temperature

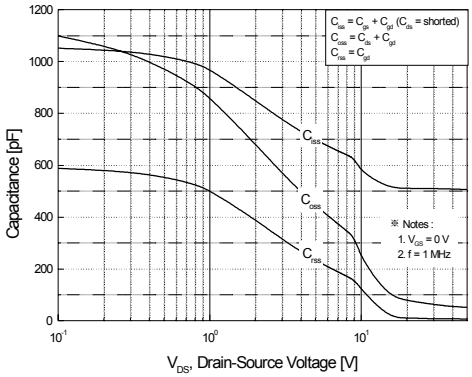

Figure 5. Capacitance Characteristics

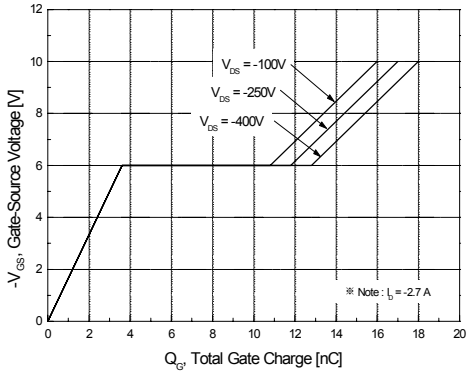

Figure 6. Gate Charge Characteristics

©2009 Fairchild Semiconductor International

Typical Characteristics (Continued)

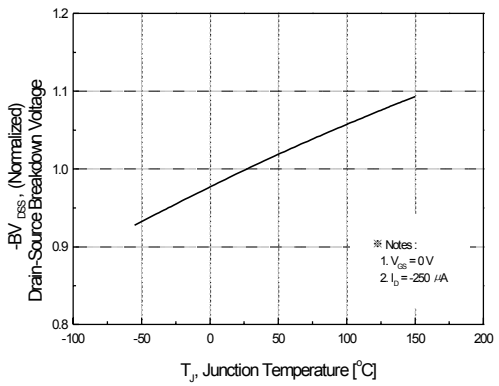

Figure 7. Breakdown Voltage Variation vs. Temperature

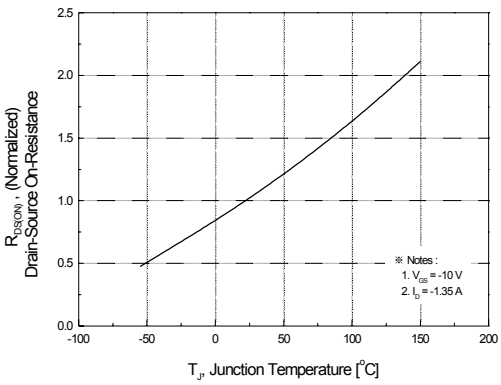

Figure 8. On-Resistance Variation vs. Temperature

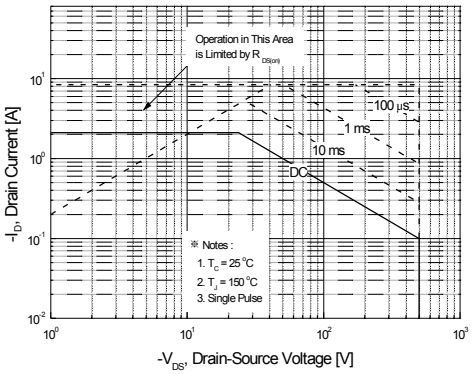

Figure 9. Maximum Safe Operating Area

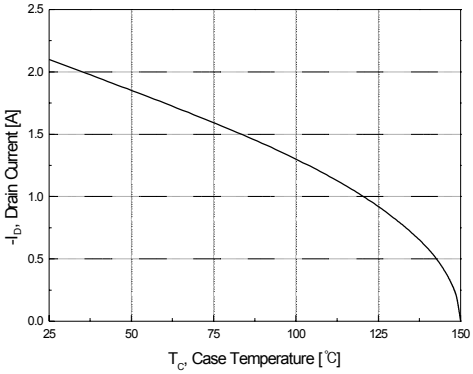

Figure 10. Maximum Drain Current vs. Case Temperature

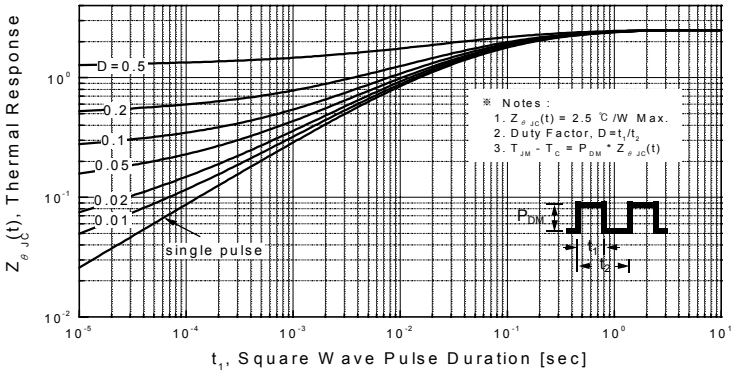

Figure 11. Transient Thermal Response Curve

Gate Charge Test Circuit & Waveform

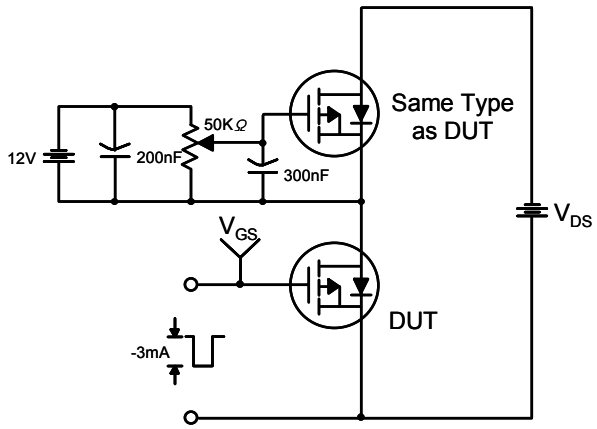

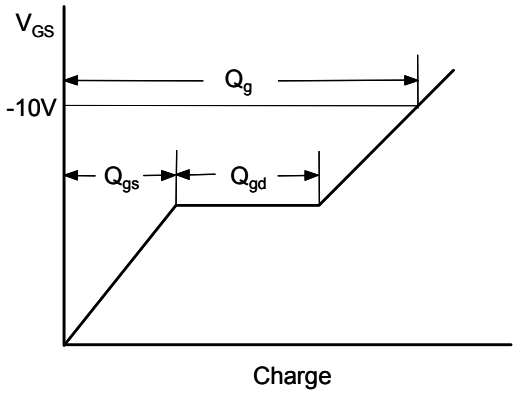

Resistive Switching Test Circuit & Waveforms

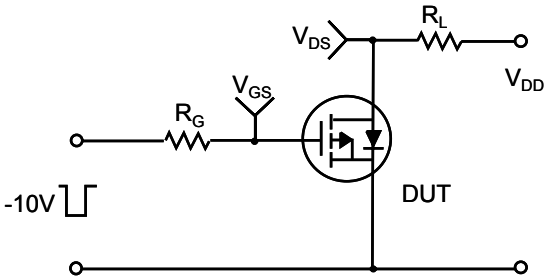

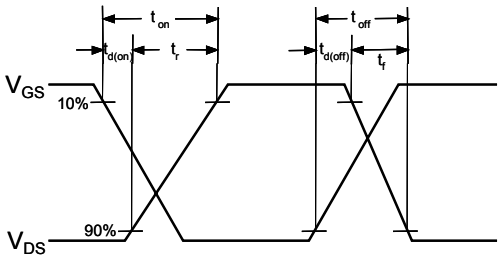

Unclamped Inductive Switching Test Circuit & Waveforms

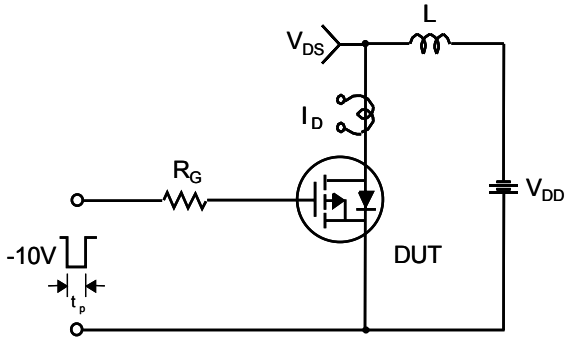

$$E_{AS} = \frac{1}{2} L I_{AS}^2 \frac{BV_{DSS}}{BV_{DSS} - V_{DD}}$$

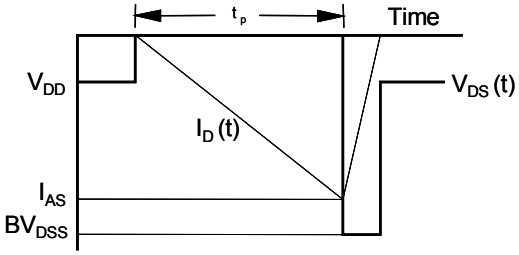

©2009 Fairchild Semiconductor International

Peak Diode Recovery dv/dt Test Circuit & Waveforms

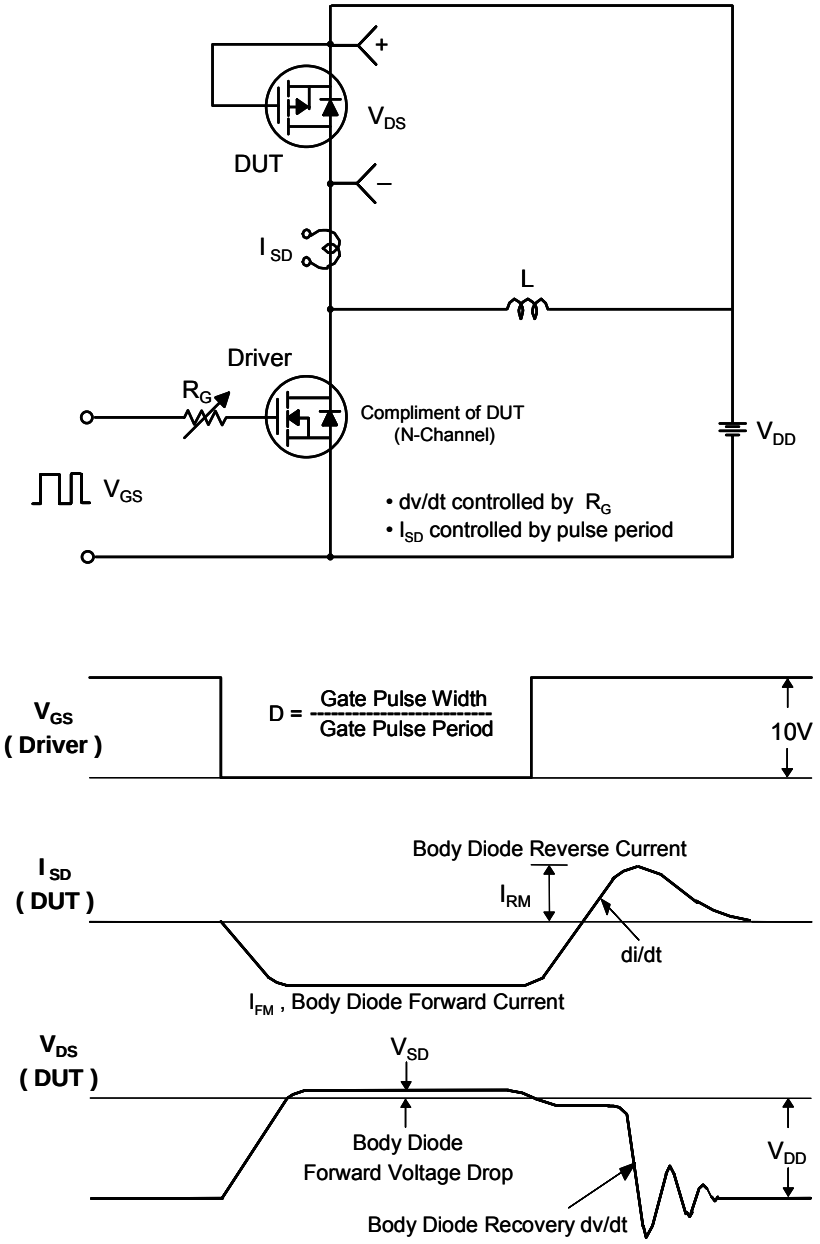

Mechanical Dimensions

TO-252 (DPAK) (FS PKG Code 36)

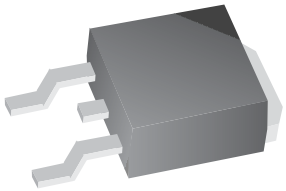

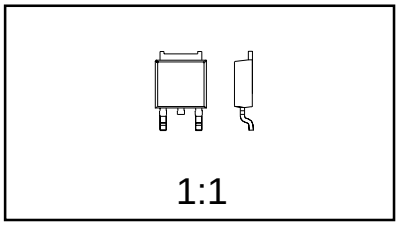

Scale 1:1 on letter size paper

Dimensions shown below are in:
millimeters

Part Weight per unit (gram): 0.33

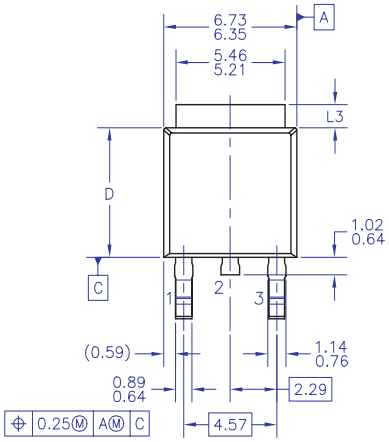

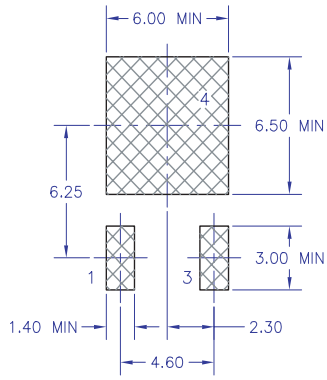

LAND PATTERN RECOMMENDATION

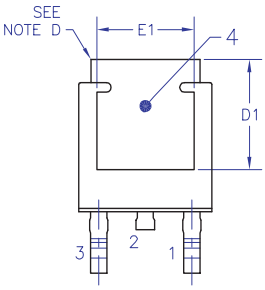

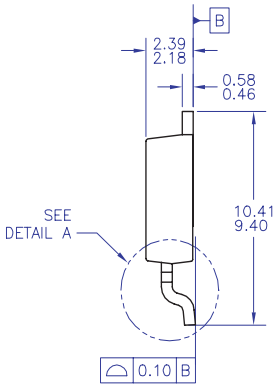

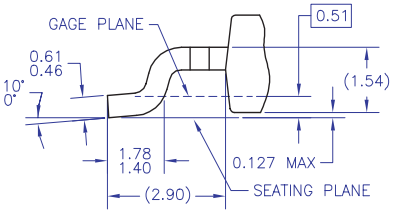

DETAIL A
(ROTATED −90°)
SCALE: 12X

NOTES: UNLESS OTHERWISE SPECIFIED

A) ALL DIMENSIONS ARE IN MILLIMETERS.

B) THIS PACKAGE CONFORMS TO JEDEC, TO−252, ISSUE C, VARIATION AA & AB, DATED NOV. 1999.

C) DIMENSIONING AND TOLERANCING PER ASME Y14.5M−1994.

D) HEAT SINK TOP EDGE COULD BE IN CHAMFERED CORNERS OR EDGE PROTRUSION.

E) DIMENSIONS L3,D,E1&D1 TABLE:

	OPTION AA	OPTION AB
L3	0.89−1.27	1.52−2.03
D	5.97−6.22	5.33−5.59
E1	4.32 MIN	3.81 MIN
D1	5.21 MIN	4.57 MIN

©2009 Fairchild Semiconductor International

Mechanical Dimensions

I - PAK

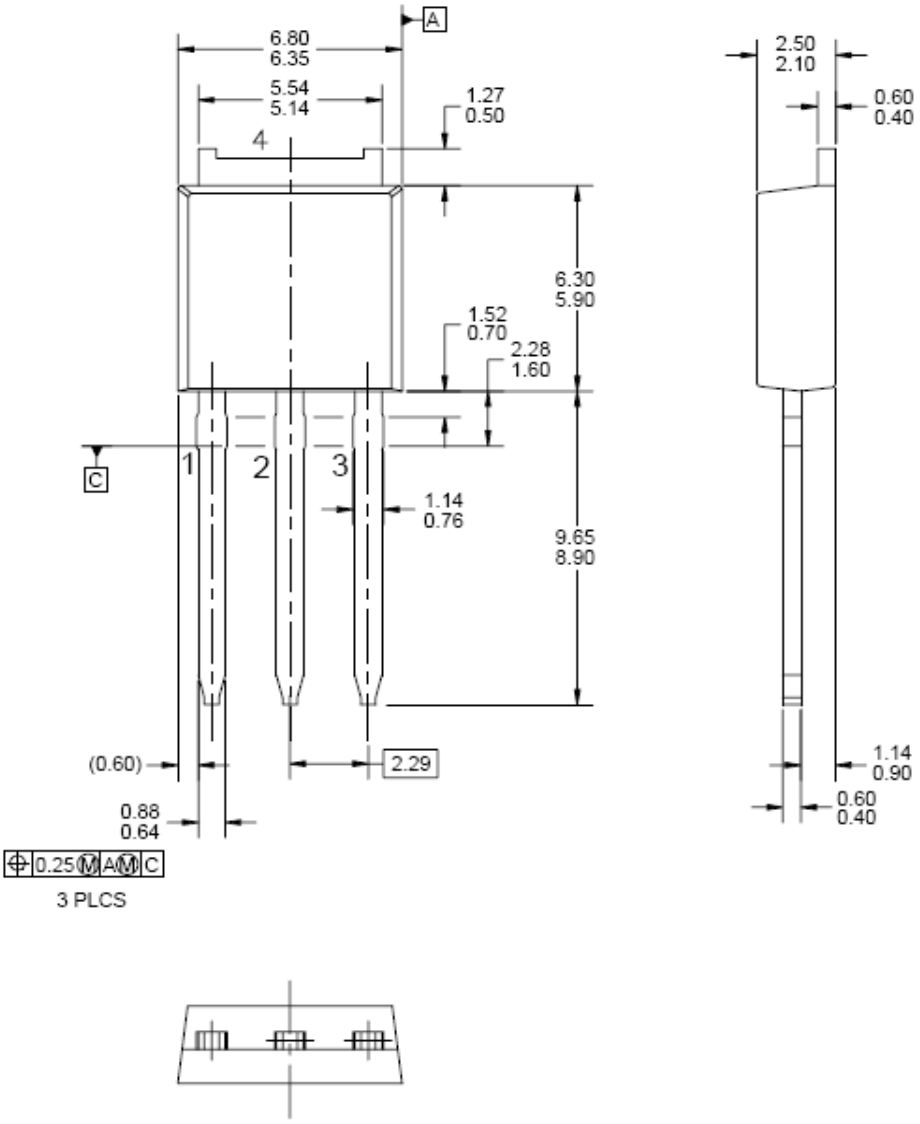

Dimensions in Millimeters

FAIRCHILD SEMICONDUCTOR®

TRADEMARKS

The following includes registered and unregistered trademarks and service marks, owned by Fairchild Semiconductor and/or its global subsidiaries, and is not intended to be an exhaustive list of all such trademarks.

Build it Now™
CorePLUS™
CorePOWER™
CROSSVOLT™
CTL™
Current Transfer Logic™
EcoSPARK®
EfficentMax™
EZSWITCH™ *
™
®
Fairchild®
Fairchild Semiconductor®
FACT Quiet Series™
FACT®
FAST®
FastvCore™
FlashWriter® *
FPS™
F-PFS™
FRFET®
Global Power Resource℠
Green FPS™
Green FPS™ e-Series™
GTO™
IntelliMAX™
ISOPLANAR™
MegaBuck™
MICROCOUPLER™
MicroFET™
MicroPak™
MillerDrive™
MotionMax™
Motion-SPM™
OPTOLOGIC®
OPTOPLANAR®
®
PDP SPM™
Power-SPM™
PowerTrench®
PowerXS™
Programmable Active Droop™
QFET®
QS™
Quiet Series™
RapidConfigure™
™
Saving our world, 1mW /W /kW at a time™
SmartMax™
SMART START™
SPM®
STEALTH™
SuperFET™
SuperSOT™-3
SuperSOT™-6
SuperSOT™-8
SupreMOS™
SyncFET™
SYSTEM GENERAL ®
The Power Franchise®
the power franchise
TinyBoost™
TinyBuck™
TinyLogic®
TINYOPTO™
TinyPower™
TinyPWM™
TinyWire™
µSerDes™
µSerDes™
UHC®
Ultra FRFET™
UniFET™
VCX™
VisualMax™
XS™

* EZSWITCH™ and FlashWriter® are trademarks of System General Corporation, used under license by Fairchild Semiconductor.

DISCLAIMER

FAIRCHILD SEMICONDUCTOR RESERVES THE RIGHT TO MAKE CHANGES WITHOUT FURTHER NOTICE TO ANY PRODUCTS HEREIN TO IMPROVE RELIABILITY, FUNCTION, OR DESIGN. FAIRCHILD DOES NOT ASSUME ANY LIABILITY ARISING OUT OF THE APPLICATION OR USE OF ANY PRODUCT OR CIRCUIT DESCRIBED HEREIN; NEITHER DOES IT CONVEY ANY LICENSE UNDER ITS PATENT RIGHTS, NOR THE RIGHTS OF OTHERS. THESE SPECIFICATIONS DO NOT EXPAND THE TERMS OF FAIRCHILD'S WORLDWIDE TERMS AND CONDITIONS, SPECIFICALLY THE WARRANTY THEREIN, WHICH COVERS THESE PRODUCTS.

LIFE SUPPORT POLICY

FAIRCHILD'S PRODUCTS ARE NOT AUTHORIZED FOR USE AS CRITICAL COMPONENTS IN LIFE SUPPORT DEVICES OR SYSTEMS WITHOUT THE EXPRESS WRITTEN APPROVAL OF FAIRCHILD SEMICONDUCTOR CORPORATION.

As used herein:

1. Life support devices or systems are devices or systems which, (a) are intended for surgical implant into the body or (b) support or sustain life, and (c) whose failure to perform when properly used in accordance with instructions for use provided in the labeling, can be reasonably expected to result in a significant injury of the user.
2. A critical component in any component of a life support, device, or system whose failure to perform can be reasonably expected to cause the failure of the life support device or system, or to affect its safety or effectiveness.

ANTI-COUNTERFEITING POLICY

Fairchild Semiconductor Corporation's Anti-Counterfeiting Policy. Farichild's Anti-Counterfeiting Policy is also stated on our external website, www.fairchildsemi.com, under Sales Support.

Counterfeiting of semiconductor parts is a growing problem in the industry. All manufactures of semiconductor products are experiencing counterfeiting of their parts. Customers who inadvertently purchase counterfeit parts experience many problems such as loss of brand reputation, substandard performance, failed application, and increased cost of production and manufacturing delays. Fairchild is taking strong measures to protect ourselves and our customers from the proliferation of counterfeit parts. Farichild strongly encourages customers to purchase Farichild parts either directly from Fairchild or from Authorized Fairchild Distributors who are listed by country on our web page cited above. Products customers buy either from fairchild directly or from Authorized Fairchild Distributors are genuine parts, have full traceability, meet Fairchild's quality standards for handing and storage and provide access to Farichild's full range of up-to-date technical and product information. Fairchild and our Authorized Distributors will stand behind all warranties and will appropriately address and warranty issues that may arise. Fairchild will not provide any warranty coverage or other assistance for parts bought from Unauthorized Sources. Farichild is committed to combat this global problem and encourage our customers to do their part in stopping this practice by buying direct or from authorized distributors.

PRODUCT STATUS DEFINITIONS
Definition of Terms

Datasheet Identification	Product Status	Definition
Advance Information	Formative / In Design	Datasheet contains the design specifications for product development. Specifications may change in any manner without notice.
Preliminary	First Production	Datasheet contains preliminary data; supplementary data will be published at a later date. Fairchild Semiconductor reserves the right to make changes at any time without notice to improve design.
No Identification Needed	Full Production	Datasheet contains final specifications. Fairchild Semiconductor reserves the right to make changes at any time without notice to improve the design.
Obsolete	Not In Production	Datasheet contains specifications on a product that is discontinued by Fairchild Semiconductor. The datasheet is for reference information only.

Rev. I37

©2009 Fairchild Semiconductor Corporation

НИОКР СИСТЕМС

ООО «НИОКРсистемс» - это оперативные поставки широкого спектра электронных компонентов отечественного и импортного производства напрямую от производителей и с крупнейших мировых складов. Реализуемая нашей компанией продукция насчитывает более полумиллиона наименований.

Благодаря этому наша компания предлагает к поставке практически не ограниченный ассортимент компонентов как оптовыми, мелкооптовыми партиями, так и в розницу.

Благодаря развитой сети поставщиков, помогаем в поиске и приобретении экзотичных или снятых с производства компонентов.

Наша компания это:

- Гарантия качества поставляемой продукции
- Широкий ассортимент
- Минимальные сроки поставок
- Техническая поддержка
- Подбор комплектации
- Индивидуальный подход
- Гибкое ценообразование
- Работаем по 275 ФЗ

ООО «НИОКР СИТЕМС»
Москва, 125362, Россия, ул. Вишневая, д. 9, к. 1, Блок 104 а и 104 в

Телефон: 8 (495) 268-14-82
Email: n@nsistems.ru

ИНН: 7735154786
ОГРН: 1167746717709