DABiC-IV 32-Bit Serial Input Latched Source Driver

Features and Benefits

- Controlled output slew rate
- 60 V minimum output break down
- PNP active pull-downs
- Low-power CMOS logic and latches
- High-speed data storage
- High data-input rate
- Low output-saturation voltages
- Improved replacements for SN75518N, SN75518NF, UCN5818x, and UCQ5818x

Package: 44 pin PLCC (suffix EP)

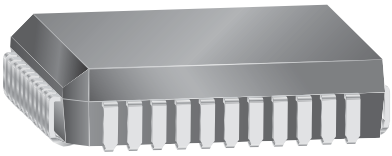

Not to scale

Description

The A6818 device combines a 32-bit CMOS shift register, accompanying data latches and control circuitry, with bipolar sourcing outputs and PNP active pull-downs. Designed primarily to drive vacuum-fluorescent displays, the 60 V and –40 mA output ratings also allow this device to be used in many other peripheral power driver applications. The A6818 features an increased data-input rate (compared with the older UCN/UCQ5818x) and a controlled output slew rate.

The CMOS shift register and latches allow direct interfacing with microprocessor-based systems. With a 3.3 or 5 V logic supply, typical serial data-input rates are up to 33 MHz.

A CMOS serial data output permits cascaded connections in applications requiring additional drive lines. Similar devices are available as the A6810 (10-bit) and A6812 (20-bit).

The A6818 output source drivers are NPN Darlingtons, capable of sourcing up to 40 mA. The controlled output slew rate reduces electromagnetic noise, which is an important consideration in systems that include telecommunications and/or microprocessors and to meet government emissions

Continued on the next page…

Functional Block Diagram

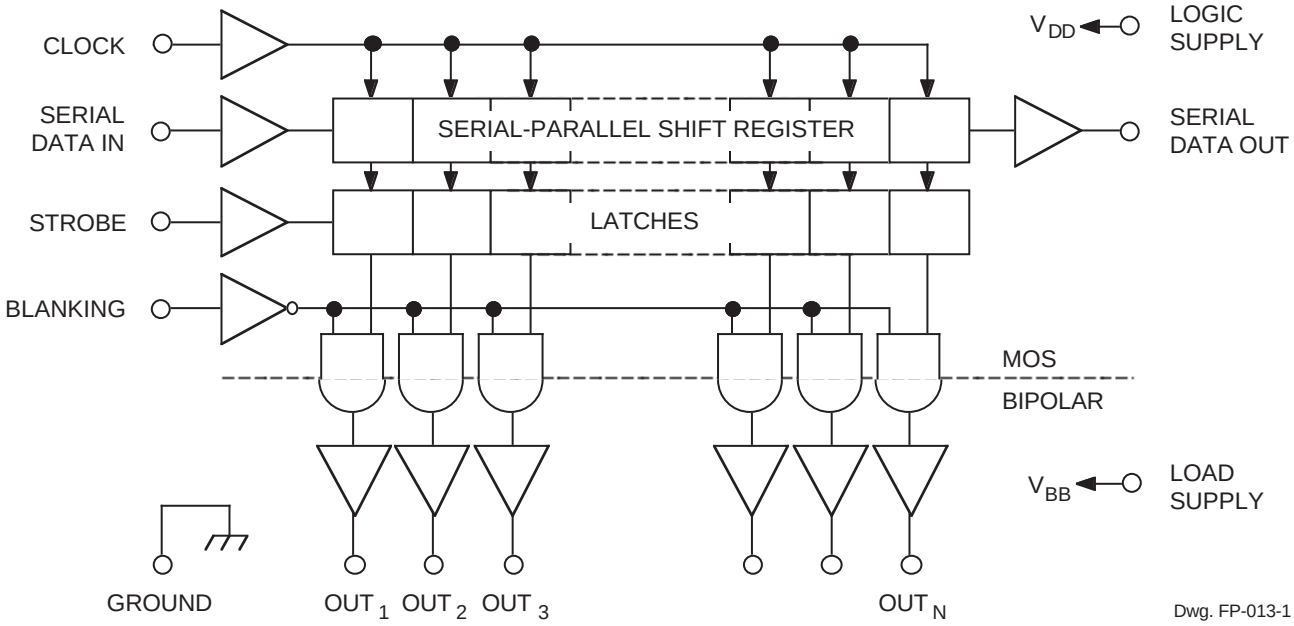

Description (continued)

regulations. For inter-digit blanking, all output drivers can be disabled and all sink drivers turned on with a BLANKING input high. The PNP active pull-downs will sink at least 2.5 mA.

Three temperature ranges are available for optimum performance in commercial (suffix S-), industrial (E-), and extended industrial (K-) applications. The package style provided is the minimum-area surface-mount PLCC (suffix -EP). Copper lead frames, low logic-power dissipation, and low output-saturation voltages allow these devices to drive most multiplexed vacuum-fluorescent displays over the maximum operating temperature range.

The lead (Pb) free versions have 100% matte tin leadframe plating.

Selection Guide

Part Number	Pb-free	Packing	Ambient Temperature T_A (°C)
A6818EEPTR-T	Yes	450 pieces/13-in. reel	–40 to 85
A6818KEPTR	–	450 pieces/13-in. reel	–40 to 125
A6818SEPTR-T	Yes	450 pieces/13-in. reel	–20 to 85

Absolute Maximum Ratings*

Characteristic	Symbol	Notes	Rating	Units
Logic Supply Voltage	V_{DD}		7.0	V
Driver Supply Voltage	V_{BB}		60	V
Input Voltage Range	V_{IN}		–0.3 to V_{DD} + 0.3	V
Continuous Output Current Range	I_{OUT}		–40 to 15	mA
Operating Ambient Temperature	T_A	Range E	–40 to 85	ºC
		Range K	–40 to 125	ºC
		Range S	–20 to 85	ºC
Maximum Junction Temperature	T_J(max)		150	ºC
Storage Temperature	T_{stg}		–55 to 125	ºC

*Caution: These CMOS devices have input static protection (Class 2) but are still susceptible to damage if exposed to extremely high static electrical charges.

Pin-out Diagram

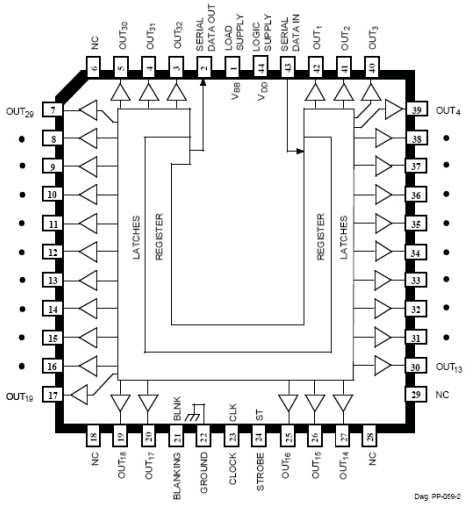

Thermal Characteristics

Characteristic	Symbol	Test Conditions*	Value	Units
Package Thermal Resistance	$R_{\theta JA}$	1-layer PCB with copper limited to solder pads	54	°C/W

*Additional thermal information available on the Allegro website.

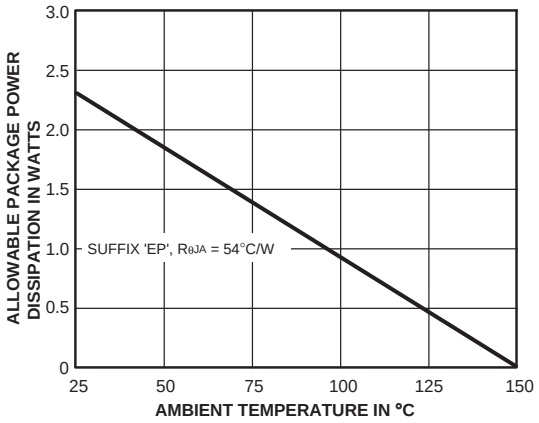

TYPICAL INPUT CIRCUIT

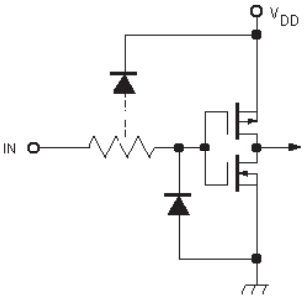

TYPICAL OUTPUT DRIVER

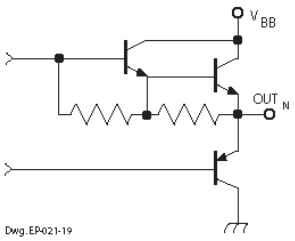

TRUTH TABLE

Serial Data Input	Clock Input	Shift Register Contents						Serial Data Output	Strobe Input	Latch Contents						Output Blanking	Output Contents					
		I_1	I_2	I_3	...	I_{N-1}	I_N			I_1	I_2	I_3	...	I_{N-1}	I_N		I_1	I_2	I_3	...	I_{N-1}	I_N
H	↑	H	R_1	R_2	...	R_{N-2}	R_{N-1}	R_{N-1}														
L	↑	L	R_1	R_2	...	R_{N-2}	R_{N-1}	R_{N-1}														
X	↓	R_1	R_2	R_3	...	R_{N-1}	R_N	R_N														
		X	X	X	...	X	X	X	L	R_1	R_2	R_3	...	R_{N-1}	R_N							
		P_1	P_2	P_3	...	P_{N-1}	P_N	P_N	H	P_1	P_2	P_3	...	P_{N-1}	P_N	L	P_1	P_2	P_3	...	P_{N-1}	P_N
										X	X	X	...	X	X	H	L	L	L	...	L	L

L = Low Logic Level H = High Logic Level X = Irrelevant P = Present State R = Previous State

ELECTRICAL CHARACTERISTICS at T_A = +25°C (A6818S-) or over operating temperature range (A6818E- and A6818K-), V_{BB} = 60 V, unless otherwise noted

Characteristic	Symbol	Test Conditions	Limits @ V_{DD} = 3.3 V			Limits @ V_{DD} = 5 V			Units
			Mln.	Typ.	Max.	Min.	Typ.	Max.	
Output Leakage Current	I_{CEX}	V_{OUT} = 0 V	—	<-0.1	-15	—	<-0.1	-15	µA
Output Voltage	$V_{OUT(1)}$	I_{OUT} = -25 mA	57.5	58.3	—	57.5	58.3	—	V
	$V_{OUT(0)}$	I_{OUT} = 1 mA	—	1.0	1.5	—	1.0	1.5	V
Output Pull-Down Current	$I_{OUT(0)}$	V_{OUT} = 5 V to V_{BB}	2.5	5.0	—	2.5	5.0	—	mA
Input Voltage	$V_{IN(1)}$		2.2	—	—	3.3	—	—	V
	$V_{IN(0)}$		—	—	1.1	—	—	1.7	V
Input Current	$I_{IN(1)}$	V_{IN} = V_{DD}	—	<0.01	1.0	—	<0.01	1.0	µA
	$I_{IN(0)}$	V_{IN} = 0.8 V	—	<-0.01	-1.0	—	<-0.01	-1.0	µA
Input Clamp Voltage	V_{IK}	I_{IN} = -200 µA	—	-0.8	-1.5	—	-0.8	-1.5	V
Serial Data Output Voltage	$V_{OUT(1)}$	I_{OUT} = -200 µA	2.8	3.05	—	4.5	4.75	—	V
	$V_{OUT(0)}$	I_{OUT} = 200 µA	—	0.15	0.3	—	0.15	0.3	V
Maximum Clock Frequency	f_c		10	33	—	10	33	—	MHz
Logic Supply Current	$I_{DD(1)}$	All Outputs High	—	0.25	0.75	—	0.3	1.0	mA
	$I_{DD(0)}$	All Outputs Low	—	0.25	0.75	—	0.3	1.0	mA
Load Supply Current	$I_{BB(1)}$	All Outputs High, No Load	—	4.5	9.0	—	4.5	9.0	mA
	$I_{BB(0)}$	All Outputs Low	—	0.2	20	—	0.2	20	µA
Blanking-to-Output Delay	$t_{dis(BQ)}$	C_L = 30 pF, 50% to 50%	—	0.7	2.0	—	0.7	2.0	µs
	$t_{en(BQ)}$	C_L = 30 pF, 50% to 50%	—	1.8	3.0	—	1.8	3.0	µs
Strobe-to-Output Delay	$t_{p(STH-QL)}$	R_L = 2.3 kΩ, C_L 30 pF	—	0.7	2.0	—	0.7	2.0	µs
	$t_{p(STH-QH)}$	R_L = 2.3 kΩ, C_L 30 pF	—	1.8	3.0	—	1.8	3.0	µs
Output Fall Time	t_f	R_L = 2.3 kΩ, C_L 30 pF	2.4	—	12	2.4	—	12	µs
Output Rise Time	t_r	R_L = 2.3 kΩ, C_L 30 pF	2.4	—	12	2.4	—	12	µs
Output Slew Rate	dV/dt	R_L = 2.3 kΩ, C_L 30 pF	4.0	—	20	4.0	—	20	V/µs
Clock-to-Serial Data Out Delay	$t_{p(CH-SQX)}$	I_{OUT} = ±200 µA	—	50	—	—	50	—	ns

Negative current is defined as coming out of (sourcing) the specified device terminal.

Typical data is is for design information only and is at T_A = +25°C.

TIMING REQUIREMENTS and SPECIFICATIONS

(Logic Levels are V_{DD} and Ground)

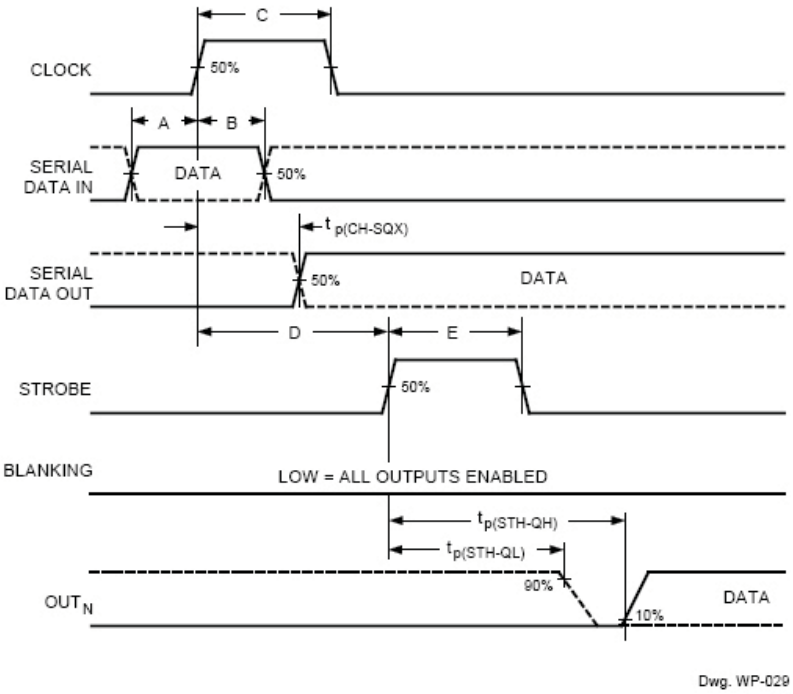

Dwg. WP-029

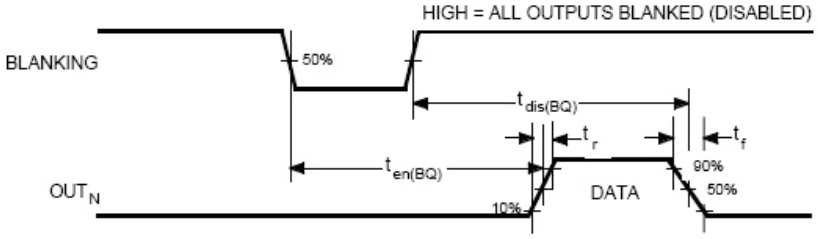

Dwg. WP-030A

A. Data Active Time Before Clock Pulse (Data Set-Up Time), $t_{su(D)}$ ..... **25 ns**

B. Data Active Time After Clock Pulse (Data Hold Time), $t_{h(D)}$ ..... **25 ns**

C. Clock Pulse Width, $t_{w(CH)}$ ..... **50 ns**

D. Time Between Clock Activation and Strobe, $t_{su(C)}$ ..... **100 ns**

E. Strobe Pulse Width, $t_{w(STH)}$ ..... **50 ns**

NOTE – Timing is representative of a 10 MHz clock. Significantly higher speeds are attainable.

Serial Data present at the input is transferred to the shift register on the logic "0" to logic "1" transition of the CLOCK input pulse. On succeeding CLOCK pulses, the registers shift data information towards the SERIAL DATA OUTPUT. The SERIAL DATA must appear at the input prior to the rising edge of the CLOCK input waveform.

Information present at any register is transferred to the respective latch when the STROBE is high (serial-to-parallel conversion). The latches will continue to accept new data as long as the STROBE is held high. Applications where the latches are bypassed (STROBE tied high) will require that the BLANKING input be high during serial data entry.

When the BLANKING input is high, the output source drivers are disabled (OFF); the pnp active pull-down sink drivers are ON. The information stored in the latches is not affected by the BLANKING input. With the BLANKING input low, the outputs are controlled by the state of their respective latches.

Package EP, 44-Pin PLCC

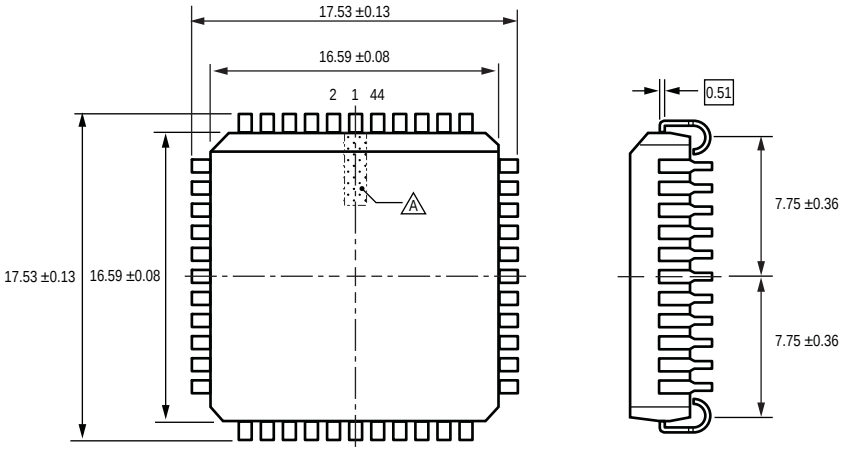

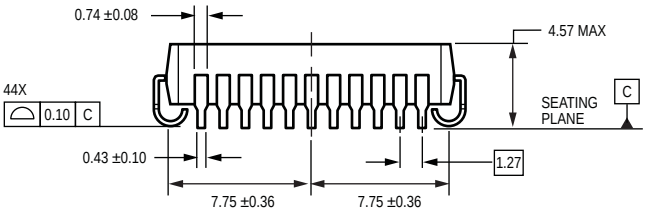

For Reference Only
(reference JEDEC MS-018 AC)
Dimensions in inches, metric dimensions (mm) in brackets, for reference only
Dimensions exclusive of mold flash, gate burrs, and dambar protrusions
Exact case and lead configuration at supplier discretion within limits shown
A Terminal #1 mark area

Copyright ©1998-2008, Allegro MicroSystems, Inc.

The products described here are manufactured under one or more U.S. patents or U.S. patents pending.

Allegro MicroSystems, Inc. reserves the right to make, from time to time, such departures from the detail specifications as may be required to permit improvements in the performance, reliability, or manufacturability of its products. Before placing an order, the user is cautioned to verify that the information being relied upon is current.

Allegro's products are not to be used in life support devices or systems, if a failure of an Allegro product can reasonably be expected to cause the failure of that life support device or system, or to affect the safety or effectiveness of that device or system.

The information included herein is believed to be accurate and reliable. However, Allegro MicroSystems, Inc. assumes no responsibility for its use; nor for any infringement of patents or other rights of third parties which may result from its use.

For the latest version of this document, visit our website:
www.allegromicro.com

НИОКР СИСТЕМС

ООО «НИОКРсистемс» - это оперативные поставки широкого спектра электронных компонентов отечественного и импортного производства напрямую от производителей и с крупнейших мировых складов. Реализуемая нашей компанией продукция насчитывает более полумиллиона наименований.

Благодаря этому наша компания предлагает к поставке практически не ограниченный ассортимент компонентов как оптовыми, мелкооптовыми партиями, так и в розницу.

Благодаря развитой сети поставщиков, помогаем в поиске и приобретении экзотичных или снятых с производства компонентов.

Наша компания это:

- Гарантия качества поставляемой продукции
- Широкий ассортимент
- Минимальные сроки поставок
- Техническая поддержка
- Подбор комплектации
- Индивидуальный подход
- Гибкое ценообразование
- Работаем по 275 ФЗ

ООО «НИОКР СИТЕМС»
Москва, 125362, Россия, ул. Вишневая, д. 9, к. 1, Блок 104 а и 104 в

Телефон: 8 (495) 268-14-82
Email: n@nsistems.ru

ИНН: 7735154786
ОГРН: 1167746717709