1mm Pitch FPC/FFC Connector

FH 21 Series

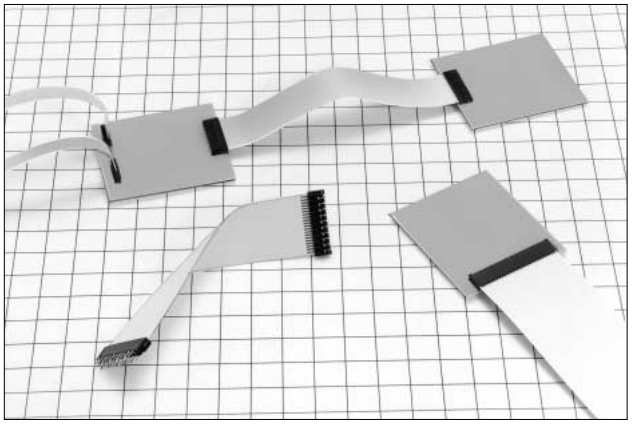

■Features

1. LIF (Low Insertion Force) Mechanism

LIF mechanism secures mounting serviceability.

2. Kink Mechanism

DIP post is treated with kinks, and prevent connector floating in the soldering process.

3. Contact Structure on Both Sides

The contact structure on both sides does restrict directionality of FPC and FFC conductors.

■Applications

HDD, facsimiles, printers, and crystal liquie modules, etc.

■Product Specifications

Rating	Rated Current: 0.5A Rated Voltage: 50V AC	Operating Temperature Range: -30 ～ +70℃ (Note 1) Operating Humidity Range: Relative humidity 90% max. (Not dewed)	Storage Temperature Range: -10 ～ +50℃ (Note 2) Storage Humidity Range: Relative Humidity: 90% max. (Not dewed)

Applicable FPC	t=0.3±0.05 Solder plating

Item	Specification	Condition
1. Insulation Resistance	500MΩ min.	Measured at 100V DC
2. Withstand voltage	Neither short nor breakdown should occur	150V AC for 1 minute
3. Contact Resistance	40mΩ ∗FPC conductor resistance included	Measured at 100mA
4. Mechanical Operation	Contact resistance: 40mΩ max. No part should be damaged, cracked, or loosened	10 cycles
5. Vibration	Electrical discontinuity, 1μS max. Contact resistance: 40mΩ No part should be damaged, cracked, or loosened	Frequency 10～55Hz and single amplitude 0.75mm in 3 directions for 2 hours, respectively.
6. Shock	Electrical discontinuity, 1μS max. Contact resistance: 40mΩ max. No part should be damaged, cracked, or loosened	Acceleration: 490m/s, duration: 11ms, sine half-wave in 3 directions for 3 cycles, respectively
7. Moisture Resistance in Steady State	Contact resistance: 40mΩ max. Insulation resistance: 50MΩ max. No part should be damaged, cracked, or loosened	Exposed to temperature 60℃ and humidity 90～95% for 96 hours

Note 1. Temperature rise included when energized
Note 2. This storage indicates a long-term storage state for the unused product before the board mounted.
The operating temperature and humidity ranges are applied to the non-energized state after the connector has been installed in the board.
Note 3. The above standards represent this series. The individual formal agreement should be based on the "Specification".

■Material

Part	Material	Finish	Remarks
Insulator	PBT	Black	UL94V-0
Contact	Phosphor bronze	Solder plating	———

■Ordering Information

Please determine the specific product. If needed, please select and order the product from the product No. as listed in this catalog on page D17 and D18.

FH 21 - 10 S - 1 DS
q w e r t y

q Series Name : FH	**r** Contact Alignment: Single
w Series No. : 21	**t** Contacts Pitch: 0.3mm
e Number of Contacts: 5, 6, 8, 10, 12, 14, 15, 16, 18, 20, 22, 24, 25, 28, 30	**y** Contact Type: DS : Right angle type DSA : Straight type

◆FPC·FFC Dimensions

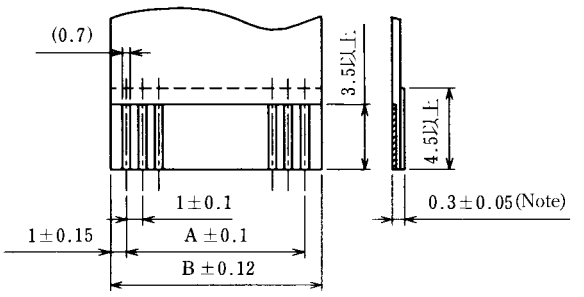

Note: In case of FPC, specify 0.25, excluding adhesive agent included in FFC.

Unit: mm

Size \ Number of Contacts	5	6	8	10	12	14	15	16	18	20	22	24	26	28	30
A	4.0	5.0	7.0	9.0	11.0	13.0	14.0	15.0	17.0	19.0	21.0	23.0	25.0	27.0	29.0
B	6.0	7.0	9.0	11.0	13.0	15.0	16.0	17.0	19.0	21.0	23.0	25.0	27.0	29.0	31.0

◆PCB Footprints

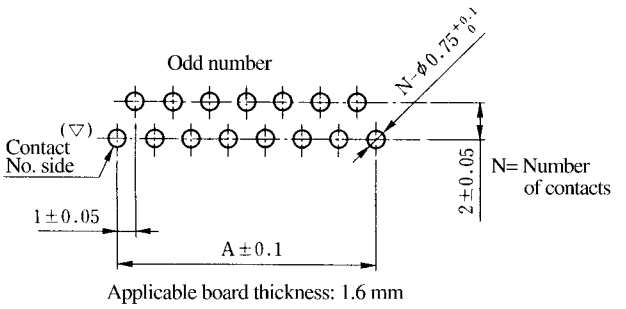

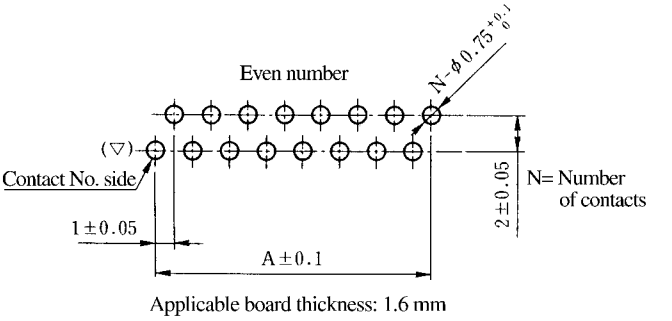

Unit: mm

Size \ Number of Contacts	5	6	8	10	12	14	15	16	18	20	22	24	26	28	30
A	4.0	5.0	7.0	9.0	11.0	13.0	14.0	15.0	17.0	19.0	21.0	23.0	25.0	27.0	29.0

■Right Angle Type

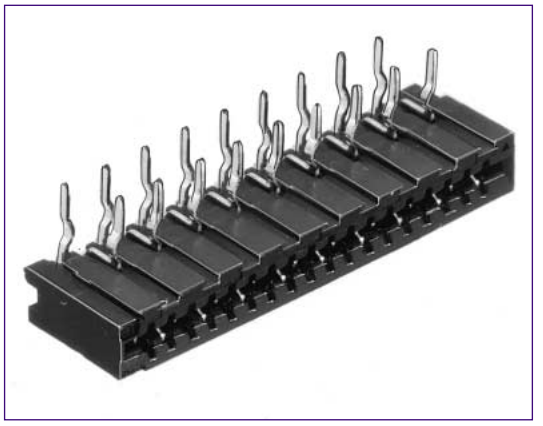

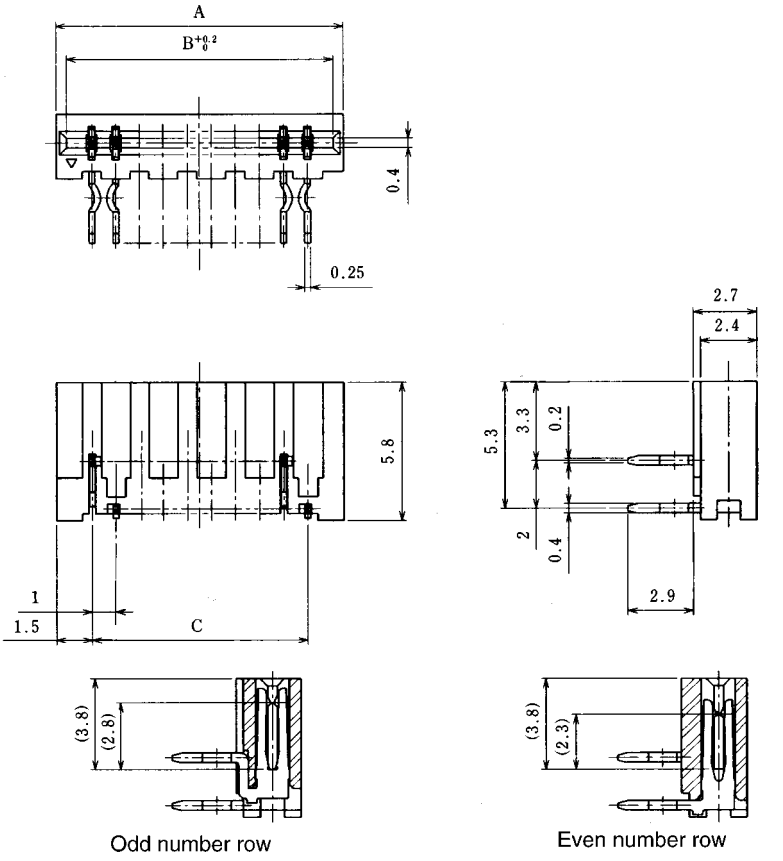

Unit: mm

Product No.	HRS No.	Number of Contacts	A	B	C
FH21- 5S-1DS	CL586-0410-0	5	7	6.15	4
FH21- 6S-1DS	CL586-0411-2	6	8	7.15	5
FH21- 8S-1DS	CL586-0412-5	8	10	9.15	7
FH21-10S-1DS	CL586-0413-8	10	12	11.15	9
FH21-12S-1DS	CL586-0414-0	12	14	13.15	11
FH21-14S-1DS	CL586-0415-3	14	16	15.15	13
FH21-15S-1DS	CL586-0416-6	15	17	16.15	14
FH21-16S-1DS	CL586-0417-9	16	18	17.15	15
FH21-18S-1DS	CL586-0418-1	18	20	19.15	17
FH21-20S-1DS	CL586-0419-4	20	22	21.15	19
FH21-22S-1DS	CL586-0420-3	22	24	23.15	21
FH21-24S-1DS	CL586-0421-6	24	26	25.15	23
FH21-26S-1DS	CL586-0422-9	26	28	27.15	25
FH21-28S-1DS	CL586-0423-1	28	30	29.15	27
FH21-30S-1DS	CL586-0424-4	30	32	31.15	29

■Straight Type

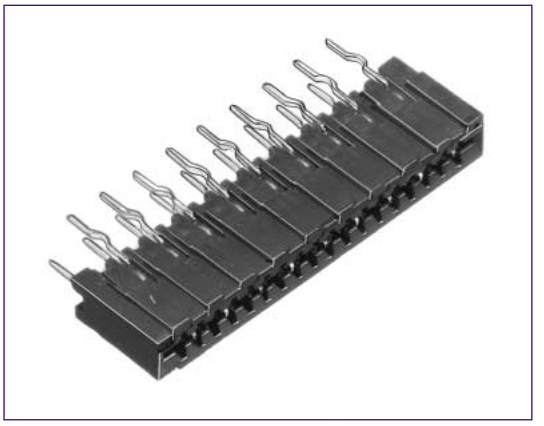

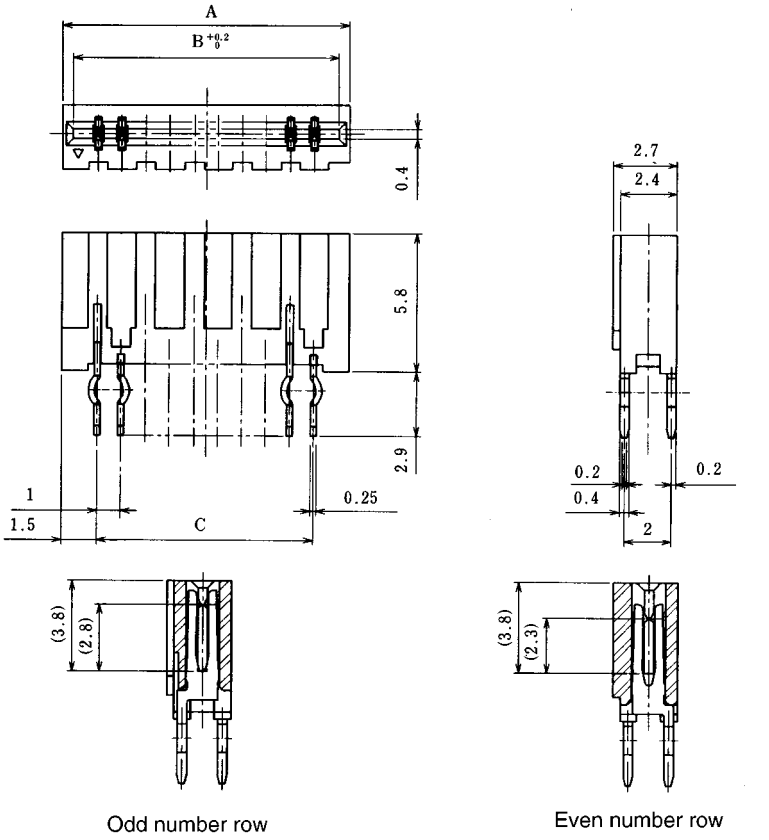

Odd number row

Even number row

Unit: mm

Product No.	HRS No.	Number of Contacts	A	B	C
FH21- 5S-1DSA	CL586-0425-7	5	7	6.15	4
FH21- 6S-1DSA	CL586-0426-0	6	8	7.15	5
FH21- 8S-1DSA	CL586-0427-2	8	10	9.15	7
FH21-10S-1DSA	CL586-0428-5	10	12	11.15	9
FH21-12S-1DSA	CL586-0429-8	12	14	13.15	11
FH21-14S-1DSA	CL586-0430-7	14	16	15.15	13
FH21-15S-1DSA	CL586-0431-0	15	17	16.15	14
FH21-16S-1DSA	CL586-0432-2	16	18	17.15	15
FH21-18S-1DSA	CL586-0433-5	18	20	19.15	17
FH21-20S-1DSA	CL586-0434-8	20	22	21.15	19
FH21-22S-1DSA	CL586-0435-0	22	24	23.15	21
FH21-24S-1DSA	CL586-0436-3	24	26	25.15	23
FH21-26S-1DSA	CL586-0437-6	26	28	27.15	25
FH21-28S-1DSA	CL586-0438-9	28	30	29.15	27
FH21-30S-1DSA	CL586-0439-1	30	32	31.15	29

НИОКР СИСТЕМС

ООО «НИОКРсистемс» - это оперативные поставки широкого спектра электронных компонентов отечественного и импортного производства напрямую от производителей и с крупнейших мировых складов. Реализуемая нашей компанией продукция насчитывает более полумиллиона наименований.

Благодаря этому наша компания предлагает к поставке практически не ограниченный ассортимент компонентов как оптовыми, мелкооптовыми партиями, так и в розницу.

Благодаря развитой сети поставщиков, помогаем в поиске и приобретении экзотичных или снятых с производства компонентов.

Наша компания это:

- Гарантия качества поставляемой продукции
- Широкий ассортимент
- Минимальные сроки поставок
- Техническая поддержка
- Подбор комплектации
- Индивидуальный подход
- Гибкое ценообразование
- Работаем по 275 ФЗ

ООО «НИОКР СИТЕМС»
Москва, 125362, Россия, ул. Вишневая, д. 9, к. 1, Блок 104 а и 104 в

Телефон: 8 (495) 268-14-82
Email: n@nsistems.ru

ИНН: 7735154786
ОГРН: 1167746717709