# bq2203A

# NV Controller With Battery Monitor

## Features

- Power monitoring and switching for nonvolatile control of SRAMs
- Write-protect control
- Battery-low and battery-fail indicators
- Reset output for system power-on reset
- Input decoder for control of up to 2 banks of SRAM
- 3-volt primary cell input
- 3-volt rechargeable battery input/output

## General Description

The CMOS bq2203A SRAM Nonvolatile Controller With Battery Monitor provides all the necessary functions for converting one or two banks of standard CMOS SRAM into nonvolatile read/write memory. The bq2203A is compatible with the Personal Computer Memory Card International Association (PCMCIA) recommendations for battery-backed static RAM memory cards.

A precision comparator monitors the 5V $V_{CC}$ input for an out-of-tolerance condition. When out of tolerance is detected, the two conditioned chip-enable outputs are forced inactive to write-protect banks of SRAM.

Power for the external SRAMs is switched from the $V_{CC}$ supply to the battery-backup supply as $V_{CC}$ decays. On a subsequent power-up, the $V_{OUT}$ supply is automatically switched from the backup supply to the $V_{CC}$ supply. The external SRAMs are write-protected until a power-valid condition exists. The reset output provides power-fail and power-on resets for the system. The battery monitor indicates battery-low and battery-fail conditions.

During power-valid operation, the input decoder selects one of two banks of SRAM.

## Pin Connections

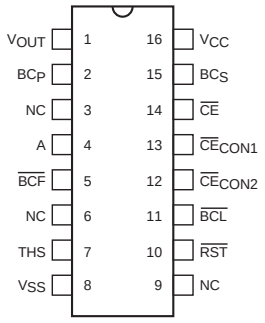


16-Pin Narrow DIP or SOIC

## Pin Names

| | |
|---|---|
| $V_{OUT}$ | Supply output |
| $\overline{RST}$ | Reset output |
| THS | Threshold select input |
| $\overline{CE}$ | chip-enable active low input |
| $\overline{CE}_{CON1}$, $\overline{CE}_{CON2}$ | Conditioned chip-enable outputs |
| A | Bank select input |
| $\overline{BCF}$ | Battery fail push-pull output |
| $\overline{BCL}$ | Battery low push-pull output |
| $BC_P$ | 3V backup supply input |
| $BC_S$ | 3V rechargeable backup supply input/output |
| NC | No connect |
| $V_{CC}$ | 5-volt supply input |
| $V_{SS}$ | Ground |

## Functional Description

Two banks of CMOS static RAM can be battery-backed using the $V_{OUT}$ and the conditioned chip-enable output pins from the bq2203A. As the voltage input $V_{CC}$ slews down during a power failure, the two conditioned chip-enable outputs, $\overline{CE}_{CON1}$ and $\overline{CE}_{CON2}$, are forced inactive independent of the chip-enable input $\overline{CE}$.

This activity unconditionally write-protects external SRAM as $V_{CC}$ falls to an out-of-tolerance threshold $V_{PFD}$. $V_{PFD}$ is selected by the threshold select input pin, THS. If THS is tied to $V_{SS}$, the power-fail detection occurs at 4.62V typical for 5% supply operation.

If THS is tied to $V_{CC}$, power-fail detection occurs at 4.37V typical for 10% supply operation. The THS pin must be tied to $V_{SS}$ or $V_{CC}$ for proper operation.

If a memory access is in process to any of the two external banks of SRAM during power-fail detection, that memory cycle continues to completion before the memory is write-protected. If the memory cycle is not terminated within time $t_{WPT}$ (150µs maximum), the two chip-enable outputs are unconditionally driven high, write-protecting the controlled SRAMs.

Nov. 1994 B

As the supply continues to fall past $V_{PFD}$, an internal switching device forces $V_{OUT}$ to the external backup energy source. $\overline{CE}_{CON1}$ and $\overline{CE}_{CON2}$ are held high by the $V_{OUT}$ energy source.

During power-up, $V_{OUT}$ is switched back to the 5V supply as $V_{CC}$ rises above the backup cell input voltage sourcing $V_{OUT}$. Outputs $\overline{CE}_{CON1}$ and $\overline{CE}_{CON2}$ are held inactive for time $t_{CER}$ (120ms maximum) after the power supply has reached $V_{PFD}$, independent of the $\overline{CE}$ input, to allow for processor stabilization.

During power-valid operation, the $\overline{CE}$ input is passed through to one of the two $\overline{CE}_{CON}$ outputs with a propagation delay of less than 10ns. The $\overline{CE}$ input is output on one of the two $\overline{CE}_{CON}$ output pins depending on the level of bank select input A, as shown in the Truth Table.

Bank select input A is usually tied to a high-order address pin so that a large nonvolatile memory can be designed using lower-density memory devices. Nonvolatility and decoding are achieved by hardware hookup as shown in Figure 1.

The reset output ($\overline{RST}$) goes active within $t_{PFD}$ (150µs maximum) after $V_{PFD}$, and remains active for a minimum of 40ms (120ms maximum) after power returns valid. The $\overline{RST}$ output can be used as the power-on reset for a microprocessor. Access to the external RAM may begin when $\overline{RST}$ returns inactive.

## Energy Cell Inputs—$BC_P$, $BC_S$

Two backup energy source inputs are provided on the bq2203A—a primary cell $BC_P$ and a secondary cell $BC_S$. The primary cell input is designed to accept any 3V primary battery (non-rechargeable), typically some type of lithium chemistry. If a primary cell is not to be used, the $BC_P$ pin should be tied to $V_{SS}$. The secondary cell input $BC_S$ is designed to accept constant-voltage current-limited rechargeable cells.

During normal 5V power valid operation, 3.3V typical is output on the $BC_S$ pin and is current-limited internally. Although this charging method can be used with various 3V secondary cells, it is specifically designed for a Panasonic VL (vanadium-lithium) series of rechargeable cells.

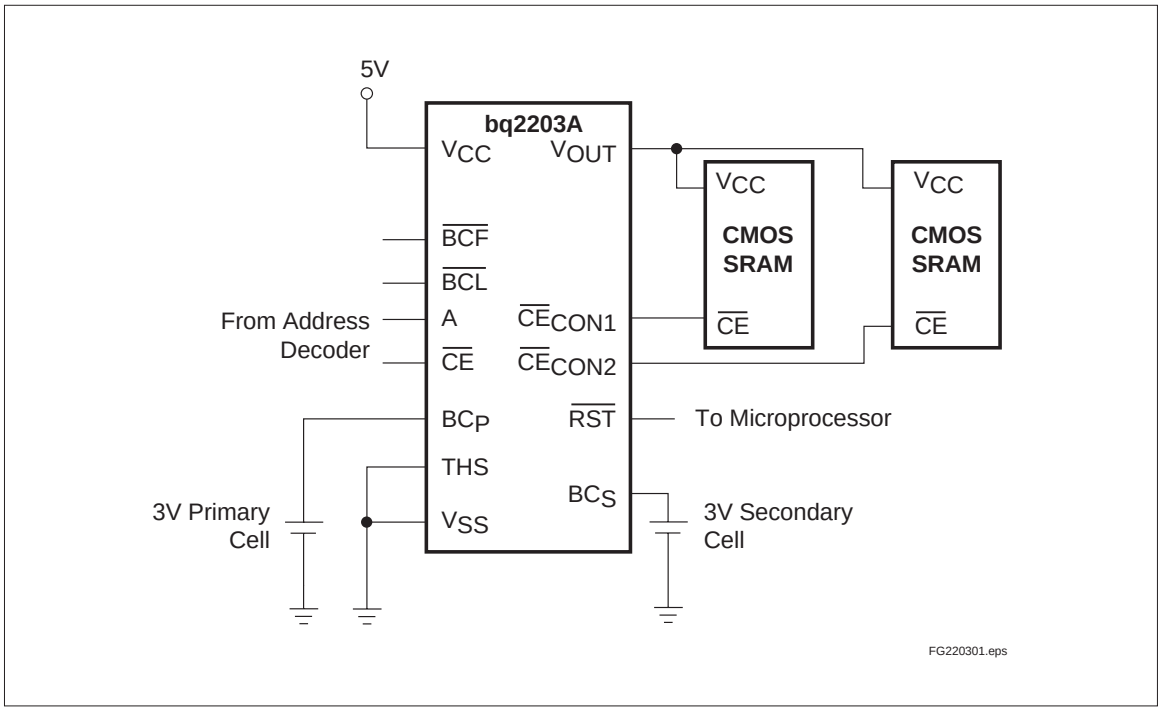


**Figure 1. Hardware Hookup (5% Supply Operation)**

If a secondary cell is not to be used, the $BC_S$ pin must be tied directly to $V_{SS}$.

$V_{CC}$ falling below $V_{PFD}$ starts the comparison of $BC_S$ and $BC_P$. The BC input comparison continues until $V_{CC}$ rises above $V_{SO}$. Power to $V_{OUT}$ begins with $BC_S$ and switches to $BC_P$ only when $BC_S$ is less than $BC_P$ minus $V_{BSO}$. The controller alternates to the higher BC voltage when the difference between the BC input voltages is greater than $V_{BSO}$. Alternating the backup batteries allows one-at-a-time battery replacement and efficient use of both backup batteries.

To prevent battery drain when there is no valid data to retain, $V_{OUT}$, $\overline{CE}_{CON1}$, and $\overline{CE}_{CON2}$ are internally isolated from $BC_P$ and $BC_S$ by either of two methods:

- Initial connection of a battery to $BC_P$ or $BC_S$ ($V_{CC}$ grounded) or
- Presentation of an isolation signal on $\overline{CE}$.

A valid isolation signal requires $\overline{CE}$ low as $V_{CC}$ crosses both $V_{PFD}$ and $V_{SO}$ during a power-down. See Figure 2. Between these two points in time, $\overline{CE}$ must be brought to $V_{CC}$*(0.48 to 0.52) and held for at least 700ns. The isolation signal is invalid if $\overline{CE}$ exceeds $V_{CC}$*0.54 at any point between $V_{CC}$ crossing $V_{PFD}$ and $V_{SO}$.

The isolation function is terminated and the appropriate battery is connected to $V_{OUT}$, $\overline{CE}_{CON1}$, and $\overline{CE}_{CON2}$ by powering $V_{CC}$ up through $V_{PFD}$.

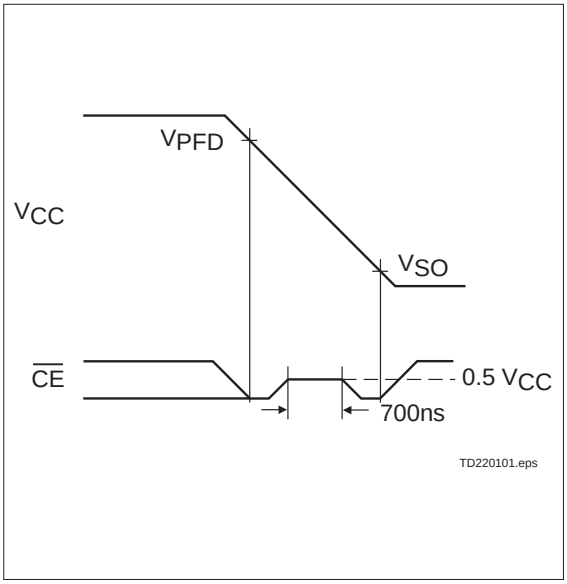


**Figure 2. Battery Isolation Signal**

## Battery Monitor—$\overline{BCL}$, $\overline{BCF}$

As $V_{CC}$ rises past $V_{PFD}$, the battery voltage on $BC_P$ is compared with a dual-voltage reference. The result of this comparison is latched internally, and output after $t_{BC}$ when $V_{CC}$ rises past $V_{PFD}$. If the battery voltage on $BC_P$ is below $V_{BL}$, then $\overline{BCL}$ is asserted low. If the battery is below $V_{BF}$, then $\overline{BCL}$ and $\overline{BCF}$ are asserted low. The results of this comparison remain latched until $V_{CC}$ falls below $V_{PFD}$.

## Truth Table

| Input | | Output | |
|---|---|---|---|
| $\overline{CE}$ | A | $\overline{CE}_{CON1}$ | $\overline{CE}_{CON2}$ |
| H | X | H | H |
| L | L | L | H |
| L | H | H | L |

## Absolute Maximum Ratings

| Symbol | Parameter | Value | Unit | Conditions |
|---|---|---|---|---|
| $V_{CC}$ | DC voltage applied on $V_{CC}$ relative to $V_{SS}$ | -0.3 to +7.0 | V | |
| $V_T$ | DC voltage applied on any pin excluding $V_{CC}$ relative to $V_{SS}$ | -0.3 to +7.0 | V | $V_T \leq V_{CC} + 0.3$ |
| $T_{OPR}$ | Operating temperature | 0 to 70 | °C | Commercial |
| | | -40 to +85 | °C | "N" Industrial |
| $T_{STG}$ | Storage temperature | -55 to +125 | °C | |
| $T_{BIAS}$ | Temperature under bias | -40 to +85 | °C | |
| $T_{SOLDER}$ | Soldering temperature | 260 | °C | For 10 seconds |
| $I_{OUT}$ | $V_{OUT}$ current | 200 | mA | |

**Note:** Permanent device damage may occur if **Absolute Maximum Ratings** are exceeded. Functional operation should be limited to the Recommended DC Operating Conditions detailed in this data sheet. Exposure to conditions beyond the operational limits for extended periods of time may affect device reliability.

## Recommended DC Operating Conditions ($T_A = T_{OPR}$)

| Symbol | Parameter | Minimum | Typical | Maximum | Unit | Notes |
|---|---|---|---|---|---|---|
| $V_{CC}$ | Supply voltage | 4.75 | 5.0 | 5.5 | V | THS = $V_{SS}$ |
| | | 4.50 | 5.0 | 5.5 | V | THS = $V_{CC}$ |
| $V_{BCP}$ | Backup cell input voltage | 2.0 | - | 4.0 | V | $V_{CC} < V_{BC}$ |
| $V_{BCS}$ | | 2.0 | - | 4.0 | V | $V_{CC} < V_{BC}$ |
| $V_{SS}$ | Supply voltage | 0 | 0 | 0 | V | |
| $V_{IL}$ | Input low voltage | -0.3 | - | 0.8 | V | |
| $V_{IH}$ | Input high voltage | 2.2 | - | $V_{CC} + 0.3$ | V | |
| THS | Threshold select | -0.3 | - | $V_{CC} + 0.3$ | V | |

**Note:** Typical values indicate operation at $T_A = 25°C$, $V_{CC} = 5V$.

bq2203A

## DC Electrical Characteristics ($T_A = T_{OPR}$, $V_{CC} = 5V \pm 10\%$)

| Symbol | Parameter | Minimum | Typical | Maximum | Unit | Conditions/Notes |
|---|---|---|---|---|---|---|
| $I_{LI}$ | Input leakage current | - | - | ± 1 | µA | $V_{IN} = V_{SS}$ to $V_{CC}$ |
| $V_{OH}$ | Output high voltage | 2.4 | - | - | V | $I_{OH}$ = -2.0mA |
| $V_{OHB}$ | $V_{OH}$, backup supply | $V_{BC}$ - 0.3 | - | - | V | $V_{BC} > V_{CC}$, $I_{OH}$ = -10µA |
| $V_{OL}$ | Output low voltage | - | - | 0.4 | V | $I_{OL}$ = 4.0mA |
| $I_{CC}$ | Operating supply current | - | 3 | 6 | mA | No load on outputs |
| $V_{PFD}$ | Power-fail detect voltage | 4.55 | 4.62 | 4.75 | V | THS = $V_{SS}$ |
| | | 4.30 | 4.37 | 4.50 | V | THS = $V_{CC}$ |
| $V_{SO}$ | Supply switch-over voltage | - | $V_{BC}$ | - | V | |
| $I_{CCDR}$ | Data-retention mode current | - | - | 100 | nA | No load on outputs |
| $V_{BC}$ | Active backup cell voltage | - | $V_{BCS}$ | - | V | $V_{BCS} > V_{BCP} + V_{BSO}$ |
| | | - | $V_{BCP}$ | - | V | $V_{BCP} > V_{BCS} + V_{BSO}$ |
| $V_{BSO}$ | Battery switch-over voltage | 0.25 | 0.4 | 0.6 | V | |
| $R_{BCS}$ | $BC_S$ charge output internal resistance | 500 | 1000 | 1750 | Ω | $V_{BCSO} \geq 3.0V$ |
| $V_{BCSO}$ | $BC_S$ charge output voltage | 3.15 | 3.3 | 3.5 | V | $V_{CC} > V_{PFD}$, $\overline{RST}$ inactive, full charge or no load |
| $I_{OUT1}$ | $V_{OUT}$ current | - | - | 160 | mA | $V_{OUT} \geq V_{CC}$ - 0.3V |
| $I_{OUT2}$ | $V_{OUT}$ current | - | 100 | - | µA | $V_{OUT} \geq V_{BC}$ - 0.2V |
| $V_{BL}$ | Voltage battery low | 2.3 | - | 2.5 | V | $BC_P$ input only |
| $V_{BF}$ | Voltage battery fail | 2.0 | - | 2.2 | V | $BC_P$ input only |

**Note:** Typical values indicate operation at $T_A$ = 25°C, $V_{CC}$ = 5V or $V_{BC}$.

## Capacitance ($T_A$ = 25°C, F = 1MHz, $V_{CC}$ = 5.0V)

| Symbol | Parameter | Minimum | Typical | Maximum | Unit | Conditions |
|---|---|---|---|---|---|---|
| $C_{IN}$ | Input capacitance | - | - | 8 | pF | Input voltage = 0V |
| $C_{OUT}$ | Output capacitance | - | - | 10 | pF | Output voltage = 0V |

**Note:** This parameter is sampled and not 100% tested.

## AC Test Conditions

| Parameter | Test Conditions |
|---|---|
| Input pulse levels | 0V to 3.0V |
| Input rise and fall times | 5ns |
| Input and output timing reference levels | 1.5V (unless otherwise specified) |
| Output load (including scope and jig) | See Figure 3 |

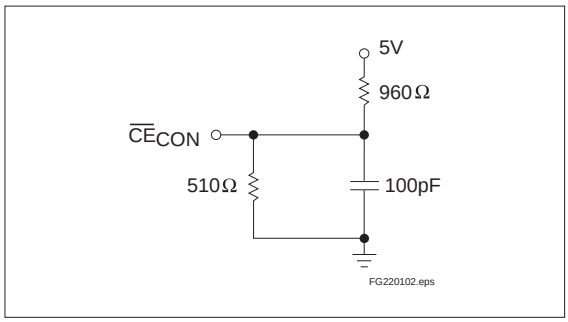


**Figure 3. Output Load**

### Power-Fail Control ($T_A = T_{OPR}$)

| Symbol | Parameter | Min. | Typ. | Max. | Unit | Conditions |
|---|---|---|---|---|---|---|
| $t_{PF}$ | $V_{CC}$ slew 4.75 to 4.25 V | 300 | - | - | µs | |
| $t_{FS}$ | $V_{CC}$ slew 4.25 V to $V_{SO}$ | 10 | - | - | µs | |
| $t_{PU}$ | $V_{CC}$ slew 4.25 to 4.75 V | 0 | - | - | µs | |
| $t_{CED}$ | Chip-enable propagation delay | | 7 | 10 | ns | |
| $t_{CER}$ | Chip-enable recovery time | 40 | 80 | 120 | ms | Time during which SRAM is write-protected after $V_{CC}$ passes $V_{PFD}$ on power-up |
| $t_{RR}$ | $V_{PFD}$ to $\overline{RST}$ inactive | $t_{CER}$ | - | $t_{CER}$ | ms | Time, after $V_{CC}$ becomes valid, before $\overline{RST}$ is cleared |
| $t_{AS}$ | Input A set up to $\overline{CE}$ | 0 | - | - | ns | |
| $t_{WPT}$ | Write-protect time | 40 | 100 | 150 | µs | Delay after $V_{CC}$ slews down past $V_{PFD}$ before SRAM is write-protected |
| $t_R$ | $V_{PFD}$ to $\overline{RST}$ active | $t_{WPT}$ | - | $t_{WPT}$ | µs | Delay after $V_{CC}$ slews down past $V_{PFD}$ before $\overline{RST}$ is active |
| $t_{BC}$ | $V_{PFD}$ to $\overline{BCL}/\overline{BCF}$ active | $t_{CER}$ | - | $t_{CER}$ | ms | Delay after $V_{CC}$ slews up past $V_{PFD}$ before $\overline{BCL}$ or $\overline{BCF}$ is active |

**Note:** Typical values indicate operation at $T_A$ = 25°C, $V_{CC}$ = 5V.

**Caution: Negative undershoots below the absolute maximum rating of -0.3V in battery-backup mode may affect data integrity.**

## Power-Down Timing

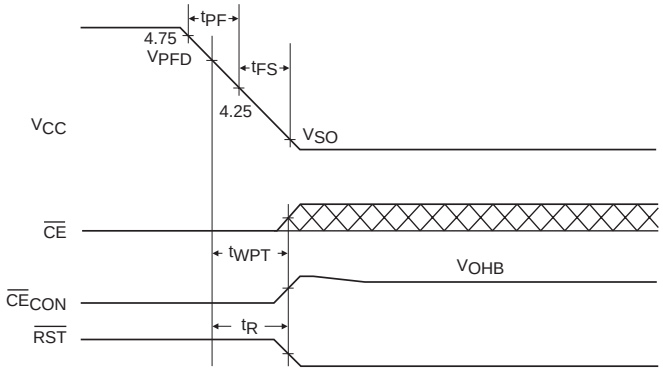


TD220202.eps

## Power-Up Timing

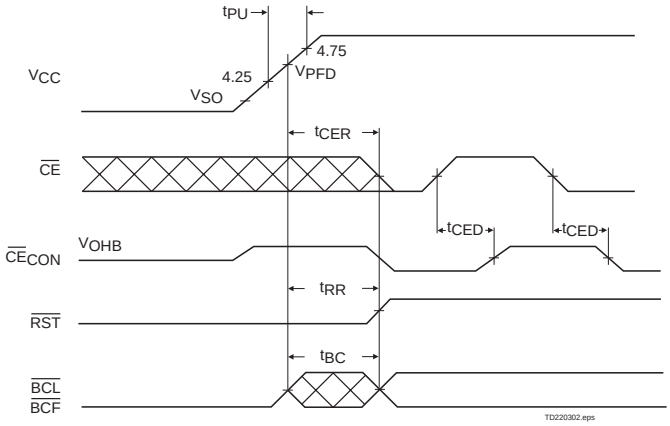


TD220302.eps

## Address-Decode Timing

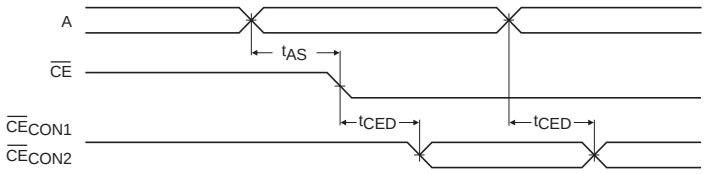


TD220204.eps

## 16-Pin SOIC Narrow

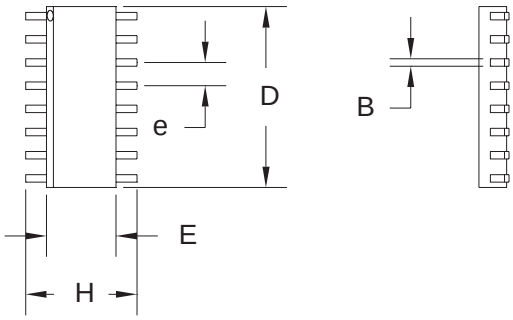


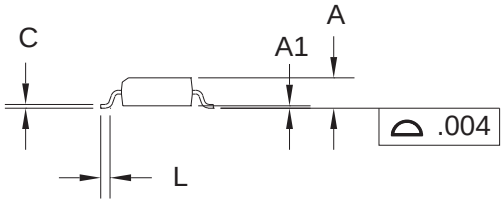


### 16-Pin SN (SOIC Narrow)

| Dimension | Minimum | Maximum |
|---|---|---|
| A | 0.060 | 0.070 |
| A1 | 0.004 | 0.010 |
| B | 0.013 | 0.020 |
| C | 0.007 | 0.010 |
| D | 0.385 | 0.400 |
| E | 0.150 | 0.160 |
| e | 0.045 | 0.055 |
| H | 0.225 | 0.245 |
| L | 0.015 | 0.035 |

All dimensions are in inches.

## 16-Pin DIPNarrow

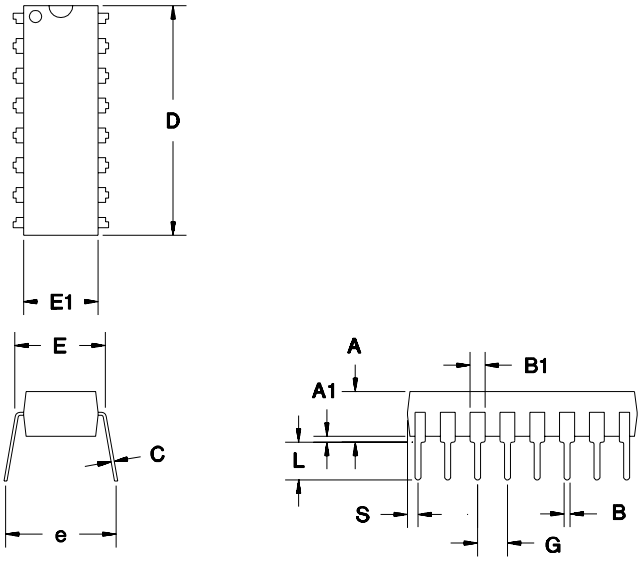


### 16-Pin PN (DIP Narrow)

| Dimension | Minimum | Maximum |
|---|---|---|
| A | 0.160 | 0.180 |
| A1 | 0.015 | 0.040 |
| B | 0.015 | 0.022 |
| B1 | 0.055 | 0.065 |
| C | 0.008 | 0.013 |
| D | 0.740 | 0.770 |
| E | 0.300 | 0.325 |
| E1 | 0.230 | 0.280 |
| e | 0.300 | 0.370 |
| G | 0.090 | 0.110 |
| L | 0.115 | 0.150 |
| S | 0.020 | 0.040 |

All dimensions are in inches.

## Data Sheet Revision History

| Change No. | Page No. | Description | Nature of Change |
|---|---|---|---|
| 1 | - | Changed data sheet from “Preliminary” to “Final” | |
| 1 | 5 | Changed maximum charge output internal resistance ($R_{BCS}$) | Was: 1500Ω<br>Is: 1750Ω |

**Note:** Change 1 = Nov. 1994 B changes from Dec. 1992 A.

## Ordering Information

**bq2203A** _ _

**Temperature Range:**
blank = Commercial (0 to +70°C)
N = Industrial (-40 to +85°C)*

**Package Option:**
PN = 16-pin plastic DIP Narrow
SN = 16-pin SOIC Narrow

**Device:**
bq2203A SRAM Nonvolatile Controller
With Battery Monitor and Reset

*Contact factory for availability.

**IMPORTANT NOTICE**

Texas Instruments and its subsidiaries (TI) reserve the right to make changes to their products or to discontinue any product or service without notice, and advise customers to obtain the latest version of relevant information to verify, before placing orders, that information being relied on is current and complete. All products are sold subject to the terms and conditions of sale supplied at the time of order acknowledgement, including those pertaining to warranty, patent infringement, and limitation of liability.

TI warrants performance of its semiconductor products to the specifications applicable at the time of sale in accordance with TI's standard warranty. Testing and other quality control techniques are utilized to the extent TI deems necessary to support this warranty. Specific testing of all parameters of each device is not necessarily performed, except those mandated by government requirements.

CERTAIN APPLICATIONS USING SEMICONDUCTOR PRODUCTS MAY INVOLVE POTENTIAL RISKS OF DEATH, PERSONAL INJURY, OR SEVERE PROPERTY OR ENVIRONMENTAL DAMAGE ("CRITICAL APPLICATIONS"). TI SEMICONDUCTOR PRODUCTS ARE NOT DESIGNED, AUTHORIZED, OR WARRANTED TO BE SUITABLE FOR USE IN LIFE-SUPPORT DEVICES OR SYSTEMS OR OTHER CRITICAL APPLICATIONS. INCLUSION OF TI PRODUCTS IN SUCH APPLICATIONS IS UNDERSTOOD TO BE FULLY AT THE CUSTOMER'S RISK.

In order to minimize risks associated with the customer's applications, adequate design and operating safeguards must be provided by the customer to minimize inherent or procedural hazards.

TI assumes no liability for applications assistance or customer product design. TI does not warrant or represent that any license, either express or implied, is granted under any patent right, copyright, mask work right, or other intellectual property right of TI covering or relating to any combination, machine, or process in which such semiconductor products or services might be or are used. TI's publication of information regarding any third party's products or services does not constitute TI's approval, warranty or endorsement thereof.

Copyright © 1999, Texas Instruments Incorporated

НИОКР СИСТЕМС

**ООО «НИОКРсистемс» -** это оперативные поставки широкого спектра электронных компонентов отечественного и импортного производства напрямую от производителей и с крупнейших мировых складов. Реализуемая нашей компанией продукция насчитывает более полумиллиона наименований.

Благодаря этому наша компания предлагает к поставке практически не ограниченный ассортимент компонентов как оптовыми, мелкооптовыми партиями, так и в розницу.

Благодаря развитой сети поставщиков, помогаем в поиске и приобретении экзотичных или снятых с производства компонентов.

## Наша компания это:

- Гарантия качества поставляемой продукции
- Широкий ассортимент
- Минимальные сроки поставок
- Техническая поддержка
- Подбор комплектации
- Индивидуальный подход
- Гибкое ценообразование
- Работаем по 275 ФЗ

ООО «НИОКР СИТЕМС»
Москва, 125362, Россия, ул. Вишневая, д. 9, к. 1, Блок 104 а и 104 в

Телефон: 8 (495) 268-14-82
Email: n@nsistems.ru

ИНН: 7735154786
ОГРН: 1167746717709