Integrated Circuit Systems, Inc.

ICS8442

700MHz, Crystal Oscillator-to-Differential LVDS Frequency Synthesizer

General Description

The ICS8442 is a general purpose, dual output Crystal-to-Differential LVDS High Frequency Synthesizer and a member of the HiPerClockS™ family of High Performance Clock Solutions from ICS. The ICS8442 has a selectable TEST_CLK or crystal input. The TEST_CLK input accepts LVCMOS or LVTTL input levels and translates them to LVDS levels. The VCO operates at a frequency range of 250MHz to 700MHz. The VCO frequency is programmed in steps equal to the value of the input reference or crystal frequency. The VCO and output frequency can be programmed using the serial or parallel interface to the configuration logic. The low phase noise characteristics of the ICS8442 makes it an ideal clock source for Gigabit Ethernet and Sonet applications.

Features

- Dual differential LVDS outputs
- Selectable crystal oscillator interface or LVCMOS/LVTTL TEST_CLK
- Output frequency range: 31.25MHz to 700MHz
- Crystal input frequency range: 10MHz to 25MHz
- VCO range: 250MHz to 700MHz
- Parallel or serial interface for programming counter and output dividers
- RMS period jitter: 2.7ps (typical)
- Cycle-to-cycle jitter: 18ps (typical)
- 3.3V supply voltage
- 0°C to 85°C ambient operating temperature
- "Lead-Free" package available

Block Diagram

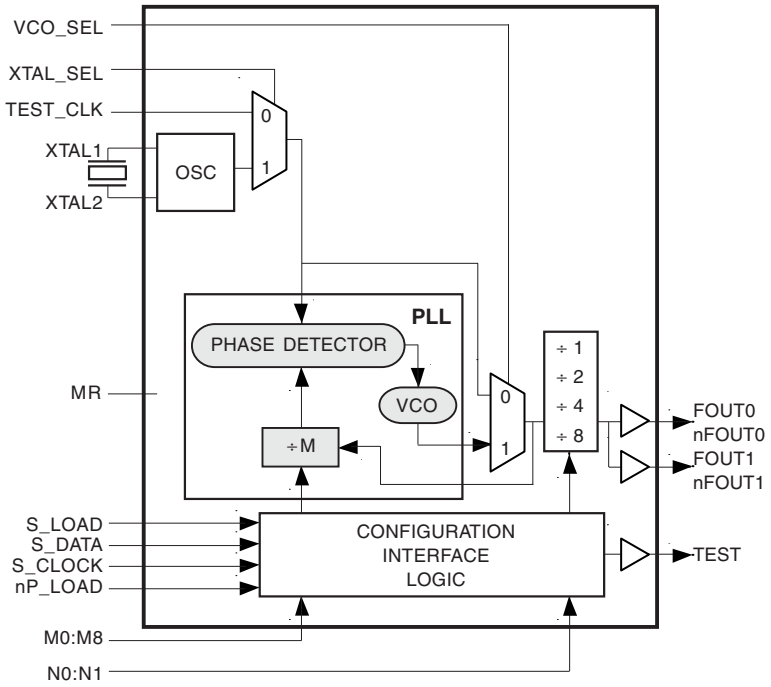

Pin Assignment

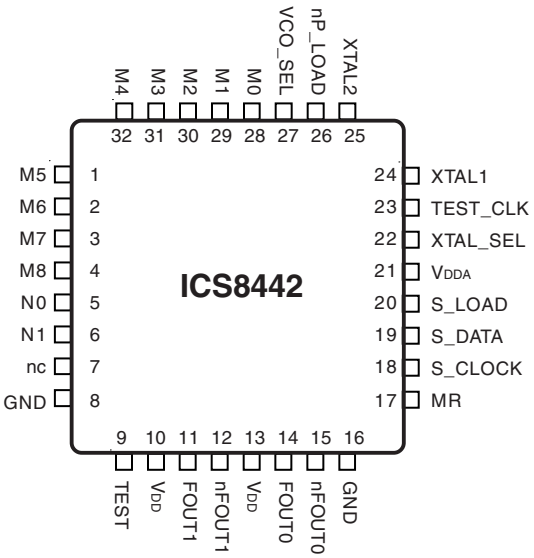

32-Lead LQFP
7mm x 7mm x 1.4mm package body
Y Package
Top View

Functional Description

NOTE: The functional description that follows describes operation using a 25MHz crystal. Valid PLL loop divider values for different crystal or input frequencies are defined in the Input Frequency Characteristics, Table 5, NOTE 1.

The ICS8442 features a fully integrated PLL and therefore requires no external components for setting the loop bandwidth. A fundamental crystal is used as the input to the on-chip oscillator. The output of the oscillator is fed into the phase detector. A 25MHz crystal provides a 25MHz phase detector reference frequency. The VCO of the PLL operates over a range of 250MHz to 700MHz. The output of the M divider is also applied to the phase detector.

The phase detector and the M divider force the VCO output frequency to be M times the reference frequency by adjusting the VCO control voltage. Note that for some values of M (either too high or too low), the PLL will not achieve lock. The output of the VCO is scaled by a divider prior to being sent to each of the LVDS output buffers. The divider provides a 50% output duty cycle.

The programmable features of the ICS8442 support two input modes to program the M divider and N output divider. The two input operational modes are parallel and serial. *Figure 1* shows the timing diagram for each mode. In parallel mode, the nP_LOAD input is initially LOW. The data on inputs M0 through M8 and N0 and N1 is passed directly to the M divider and N output divider. On the LOW-to-HIGH transition of the nP_LOAD input, the data is latched and the M divider remains loaded until the next LOW transition on nP_LOAD or until a serial event occurs. As a result, the M and N bits can be hardwired to set the M divider and N output divider to a specific default state that will automatically occur during power-up. The TEST output is LOW when operating in the parallel input mode. The relationship between the VCO frequency, the crystal frequency and the M divider is defined as follows:

$$fVCO = fxtal \times M$$

The M value and the required values of M0 through M8 are shown in Table 3B, Programmable VCO Frequency Function Table. Valid M values for which the PLL will achieve lock for a 25MHz reference are defined as $10 \le M \le 28$. The frequency out is defined as follows:

$$FOUT = \frac{fVCO}{N} = fxtal \times \frac{M}{N}$$

Serial operation occurs when nP_LOAD is HIGH and S_LOAD is LOW. The shift register is loaded by sampling the S_DATA bits with the rising edge of S_CLOCK. The contents of the shift register are loaded into the M divider and N output divider when S_LOAD transitions from LOW-to-HIGH. The M divide and N output divide values are latched on the HIGH-to-LOW transition of S_LOAD. If S_LOAD is held HIGH, data at the S_DATA input is passed directly to the M divider and N output divider on each rising edge of S_CLOCK. The serial mode can be used to program the M and N bits and test bits T1 and T0. The internal registers T0 and T1 determine the state of the TEST output as follows:

T1	T0	TEST Output
0	0	LOW
0	1	S_Data, Shift Register Input
1	0	Output of M divider
1	1	CMOS FOUT

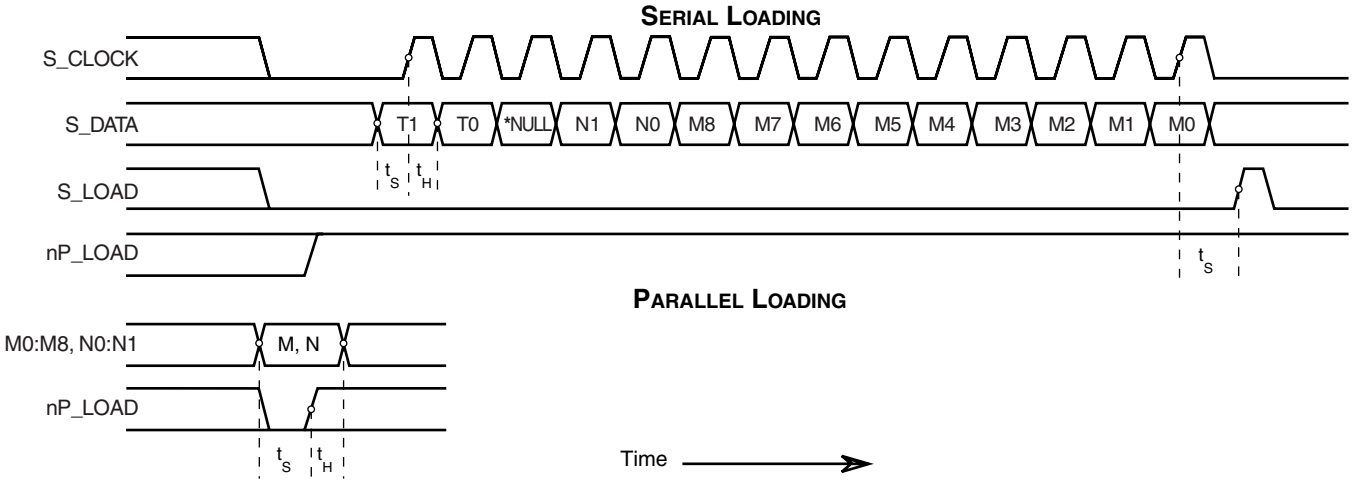

Figure 1. Parallel & Serial Load Operations

***NOTE:** The NULL timing slot must be observed.

Table 1. Pin Descriptions

Number	Name	Type		Description
1	M5	Input	Pullup	M divider inputs. Data latched on LOW-to-HIGH transistion of nP_LOAD input. LVCMOS / LVTTL interface levels.
2, 3, 4, 28, 29, 30, 31, 32	M6, M7, M8, M0, M1, M2, M3, M4	Input	Pulldown	
5, 6	N0, N1	Input	Pulldown	Determines output divider value as defined in Table 3C Function Table. LVCMOS / LVTTL interface levels.
7	nc	Unused		No connect.
8, 16	GND	Power		Power supply ground.
9	TEST	Output		Test output which is ACTIVE in the serial mode of operation. Output driven LOW in parallel mode. LVCMOS / LVTTL interface levels.
10, 13	V_{DD}	Power		Core supply pins.
11, 12	FOUT1, nFOUT1	Output		Differential output for the synthesizer. LVDS interface levels.
14, 15	FOUT0, nFOUT0	Output		Differential output for the synthesizer. LVDS interface levels.
17	MR	Input	Pulldown	Active High Master Reset. When logic HIGH, the internal dividers are reset causing the true outputs FOUTx to go low and the inverted outputs nFOUTx to go high. When logic LOW, the internal dividers and the outputs are enabled. Assertion of MR does not effect loaded M, N, and T values. LVCMOS / LVTTL interface levels.
18	S_CLOCK	Input	Pulldown	Clocks in serial data present at S_DATA input into the shift register on the rising edge of S_CLOCK. LVCMOS / LVTTL interface levels.
19	S_DATA	Input	Pulldown	Shift register serial input. Data sampled on the rising edge of S_CLOCK. LVCMOS / LVTTL interface levels.
20	S_LOAD	Input	Pulldown	Controls transition of data from shift register into the dividers. LVCMOS / LVTTL interface levels.
21	V_{DDA}	Power		Analog supply pin.
22	XTAL_SEL	Input	Pullup	Selects between crystal oscillator or test inputs as the PLL reference source. Selects XTAL inputs when HIGH. Selects TEST_CLK when LOW. LVCMOS / LVTTL interface levels.
23	TEST_CLK	Input	Pulldown	Test clock input. LVCMOS / LVTTL interface levels.
24, 25	XTAL1, XTAL2	Input		Crystal oscillator interface. XTAL1 is the input XTAL2 is the output.
26	nP_LOAD	Input	Pulldown	Parallel load input. Determines when data present at M8:M0 is loaded into M divider, and when data present at N1:N0 sets the N output divider value. LVCMOS / LVTTL interface levels.
27	VCO_SEL	Input	Pullup	Determines whether synthesizer is in PLL or bypass mode. LVCMOS / LVTTL interface levels.

NOTE: *Pullup* and *Pulldown* refer to internal input resistors. See Table 2, Pin Characteristics, for typical values.

Table 2. Pin Characteristics

Symbol	Parameter	Test Conditions	Minimum	Typical	Maximum	Units
C_{IN}	Input Capacitance			4		pF
R_{PULLUP}	Input Pullup Resistor			51		KΩ
$R_{PULLDOWN}$	Input Pulldown Resistor			51		KΩ

Table 3A. Parallel and Serial Mode Function Table

Inputs							Conditions
MR	nP_LOAD	M	N	S_LOAD	S_CLOCK	S_DATA	
H	X	X	X	X	X	X	Reset. When HIGH, forces the outputs to a differential LOW state (FOUTx = LOW and nFOUTx = HIGH), but does not effect loaded M, N, and T values.
L	L	Data	Data	X	X	X	Data on M and N inputs passed directly to the M divider and N output divider. TEST output forced LOW.
L	↑	Data	Data	L	X	X	Data is latched into input registers and remains loaded until next LOW transition or until a serial event occurs.
L	H	X	X	L	↑	Data	Serial input mode. Shift register is loaded with data on S_DATA on each rising edge of S_CLOCK.
L	H	X	X	↑	L	Data	Contents of the shift register are passed to the M divider and N output divider.
L	H	X	X	↓	L	Data	M divider and N output divider values are latched.
L	H	X	X	L	X	X	Parallel or serial input do not affect shift registers.
L	H	X	X	H	↑	Data	S_DATA passed directly to M divider as it is clocked.

NOTE: L = LOW
H = HIGH
X = Don't care
↑ = Rising edge transition
↓ = Falling edge transition

Table 3B. Programmable VCO Frequency Function Table

VCO Frequency (MHz)	M Divide	256	128	64	32	16	8	4	2	1
		M8	M7	M6	M5	M4	M3	M2	M1	M0
250	10	0	0	0	0	0	1	0	1	0
275	11	0	0	0	0	0	1	0	1	1
•	•	•	•	•	•	•	•	•	•	•
•	•	•	•	•	•	•	•	•	•	•
650	26	0	0	0	0	1	1	0	1	0
675	27	0	0	0	0	1	1	0	1	1
700	28	0	0	0	0	1	1	1	0	0

NOTE 1: These M divide values and the resulting frequencies correspond to crystal or TEST_CLK input frequency of 25MHz.

Table 3C. Programmable Output Divider Function Table

Inputs		N Divider Value	Output Frequency (MHz)	
N1	N0		Minimum	Maximum
0	0	1	250	700
0	1	2	125	350
1	0	4	62.5	175
1	1	8	31.25	87.5

Absolute Maximum Ratings

Supply Voltage, V_{DD}	4.6V
Inputs, V_I	-0.5V to V_{DD} + 0.5V
Outputs, I_O	
Continuous Current	10mA
Surge Current	15mA
Package Thermal Impedance, θ_{JA}	47.9°C/W (0 lfpm)
Storage Temperature, T_{STG}	-65°C to 150°C

NOTE: Stresses beyond those listed under Absolute Maximum Ratings may cause permanent damage to the device. These ratings are stress specifications only. Functional operation of product at these conditions or any conditions beyond those listed in the *DC Characteristics* or *AC Characteristics* is not implied. Exposure to absolute maximum rating conditions for extended periods may affect product reliability.

Table 4A. Power Supply DC Characteristics, $V_{DD} = V_{DDA} = 3.3V±5\%$, T_A = 0°C to 85°C

Symbol	Parameter	Test Conditions	Minimum	Typical	Maximum	Units
V_{DD}	Core Supply Voltage		3.135	3.3	3.465	V
V_{DDA}	Analog Supply Voltage		3.135	3.3	3.465	V
I_{DD}	Power Supply Current				155	mA
I_{DDA}	Analog Supply Current				20	mA

Table 4B. LVCMOS / LVTTL DC Characteristics, $V_{DD} = V_{DDA} = 3.3V±5\%$, T_A = 0°C to 85°C

Symbol	Parameter		Test Conditions	Minimum	Typical	Maximum	Units
V_{IH}	Input High Voltage	M0-M8, N0, N1, MR, nP_LOAD, S_CLOCK, S_DATA, S_LOAD, XTAL_SEL, VCO_SEL		2		V_{DD} + 0.3	V
		TEST_CLK		2		V_{DD} + 0.3	V
V_{IL}	Input Low Voltage	M0-M8, N0, N1, MR, nP_LOAD, S_CLOCK, S_DATA, S_LOAD, XTAL_SEL, VCO_SEL		-0.3		0.8	V
		TEST_CLK		-0.3		1.3	V
I_{IH}	Input High Current	M0-M4, M6-M8, N0, N1, MR, nP_LOAD, S_CLOCK, S_DATA, S_LOAD,	$V_{DD} = V_{IN} = 3.465V$			150	µA
		M5, XTAL_SEL, VCO_SEL	$V_{DD} = V_{IN} = 3.465V$			5	
I_{IL}	Input Low Current	M0-M4, M6-M8, N0, N1, MR, nP_LOAD, S_CLOCK, S_DATA, S_LOAD,	V_{DD} = 3.465V, V_{IN} = 0V	-5			µA
		M5, XTAL_SEL, VCO_SEL	V_{DD} = 3.465V, V_{IN} = 0V	-150			
V_{OH}	Output High Voltage	TEST; NOTE 1		2.6			V
V_{OL}	Output Low Voltage	TEST; NOTE 1				0.5	V

NOTE 1: Outputs terminated with 50Ω to $V_{DD}/2$. See Parameter Measurement Information section, "3.3V Output Load Test Circuit".

Table 4C. LVDS DC Characteristics, $V_{DD} = V_{DDA} = 3.3V \pm 5\%$, $T_A = 0°C$ to $85°C$

Symbol	Parameter	Test Conditions	Minimum	Typical	Maximum	Units
V_{OD}	Differential Output Voltage		250	450	600	mV
ΔV_{OD}	V_{OD} Magnitude Change				50	mV
V_{OS}	Offset Voltage		1.125	1.4	1.6	V
ΔV_{OS}	V_{OS} Magnitude Change				50	mV

Table 5. Input Frequency Characteristics, $V_{DD} = V_{DDA} = 3.3V \pm 5\%$, $T_A = 0°C$ to $85°C$

Symbol	Parameter		Test Conditions	Minimum	Typical	Maximum	Units
f_{IN}	Input Frequency	TEST_CLK; NOTE 1		10		25	MHz
		XTAL1, XTAL2; NOTE 1		10		25	MHz
		S_CLOCK				50	MHz

NOTE 1: For the input crystal and TEST_CLK frequency range the M value must be set for the VCO to operate within the 250MHz to 700MHz range. Using the minimum input frequency of 10MHz valid values of M are $25 \le M \le 70$. Using the maximum frequency of 25MHz valid values of M are $10 \le M \le 28$.

Table 6. Crystal Characteristics

Parameter	Test Conditions	Minimum	Typical	Maximum	Units
Mode of Oscillation		Fundamental			
Frequency		10		25	MHz
Equivalent Series Resistance (ESR)				50	Ω
Shunt Capacitance				7	pF

Table 7. AC Characteristics, $V_{DD} = V_{DDA} = 3.3V \pm 5\%$, $T_A = 0°C$ to $85°C$

Symbol	Parameter		Test Conditions	Minimum	Typical	Maximum	Units
F_{OUT}	Output Frequency			31.25		700	MHz
*t*jit(cc)	Cycle-to-Cycle Jitter; NOTE 1, 3		$f \ge 350MHz$		18	28	ps
			$f < 350MHz$		27	45	ps
*t*jit(per)	Period Jitter, RMS; NOTE 1, 3				2.7	7	ps
*t*sk(o)	Output Skew; NOTE 2, 3					15	ps
t_R / t_F	Output Rise/Fall Time		20% to 80%	150		650	ps
t_S	Setup Time	M, N to nP_LOAD		5			ns
		S_DATA to S_CLOCK		5			ns
		S_CLOCK to S_LOAD		5			ns
t_H	Hold Time	M, N to nP_LOAD		5			ns
		S_DATA to S_CLOCK		5			ns
		S_CLOCK to S_LOAD		5			ns
odc	Output Duty Cycle		N > 1	48		52	%
t_{PW}	Output Pulse Width		N = 1	$t_{Period}/2 - 150$		$t_{Period}/2 + 150$	ps
t_{LOCK}	PLL Lock Time					1	ms

See Parameter Measurement Information section.
NOTE 1: Jitter performance using XTAL inputs.
NOTE 2: Defined as skew between outputs at the same supply voltage and with equal load conditions. Measured at the output differential cross points.
NOTE 3: This parameter is defined in accordance with JEDEC Standard 65.

Parameter Measurement Information

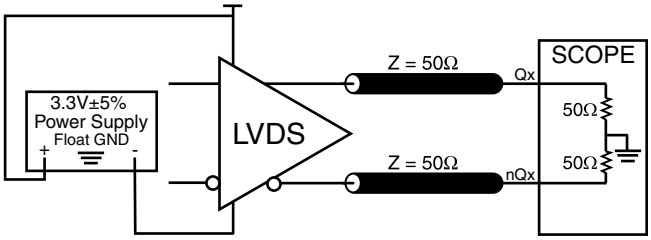

3.3V Output Load Test Circuit

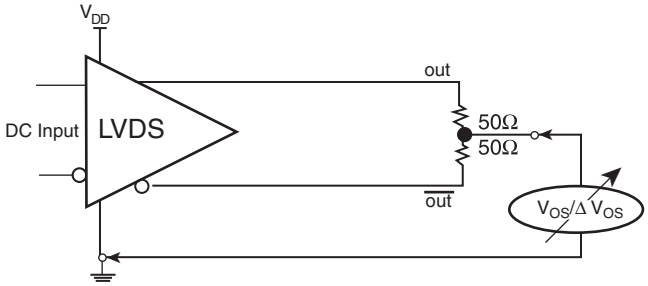

V_{OS} / ΔVOS Setup

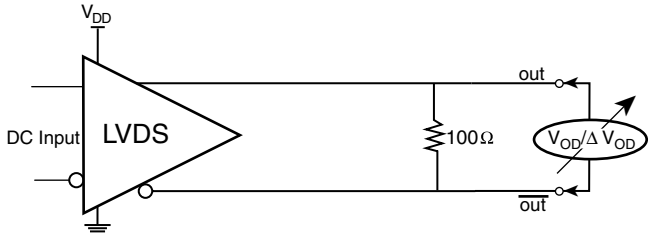

VOD / ΔVOD Setup

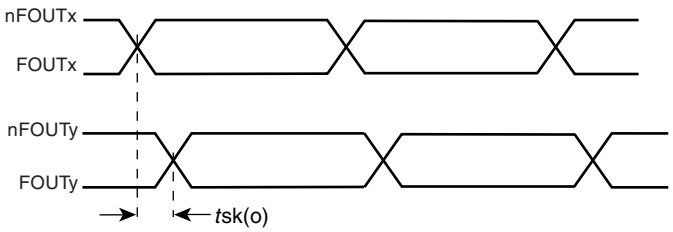

Output Skew

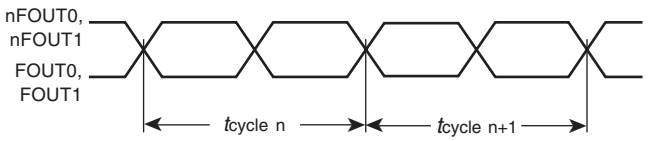

$t_{jit(cc)} = t_{cycle\ n} - t_{cycle\ n+1}$

1000 Cycles

Cycle-to-Cycle Jitter

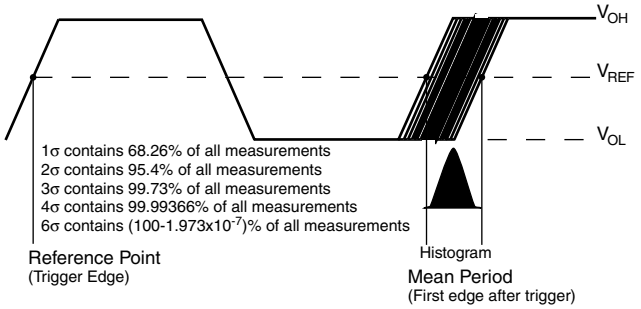

Period Jitter

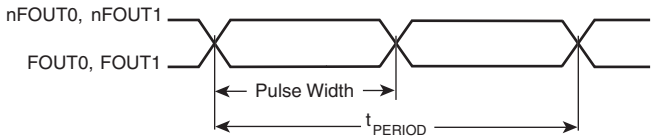

$$odc = \frac{t_{PW}}{t_{PERIOD}}$$

odc & t_{PERIOD}

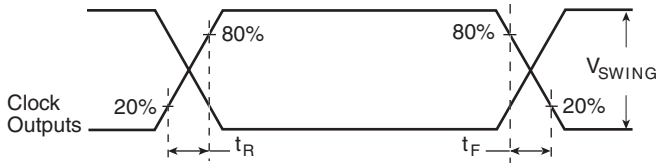

Output Rise/Fall Time

Application Information

Storage Area Networks

A variety of technologies are used for interconnection of the elements within a SAN. The tables below lists the common frequencies used as well as the settings for the ICS8442 to generate the appropriate frequency.

Table 8. Common SANs Application Frequencies

Interconnect Technology	Clock Rate	Reference Frequency to SERDES (MHz)	Crystal Frequency (MHz)
Gigabit Ethernet	1.25 GHz	125, 250, 156.25	25, 19.53125
Fibre Channel	FC1 1.0625 GHz FC2 2.1250 GHz	106.25, 53.125, 132.8125	16.6015625, 25
Infiniband	2.5 GHz	125, 250	25

Table 9. Configuration Details for SANs Applications

Interconnect Technology	Crystal Frequency (MHz)	ICS8442 Output Frequency to SERDES (MHz)	ICS8442 M & N Settings										
			M8	M7	M6	M5	M4	M3	M2	M1	M0	N1	N0
Gigabit Ethernet	25	125	0	0	0	0	1	0	1	0	0	1	0
	25	250	0	0	0	0	1	0	1	0	0	0	1
	25	156.25	0	0	0	0	1	1	0	0	1	1	0
	19.53125	156.25	0	0	0	1	0	0	0	0	0	1	0
Fiber Channel 1	25	53.125	0	0	0	0	1	0	0	0	1	1	1
	25	106.25	0	0	0	0	1	0	0	0	1	1	0
Fiber Channel 2	16.6015625	132.8125	0	0	0	1	0	0	0	0	0	1	0
Infiniband	25	125	0	0	0	0	1	0	1	0	0	1	0
	25	250	0	0	0	0	1	0	1	0	0	0	1

Power Supply Filtering Techniques

As in any high speed analog circuitry, the power supply pins are vulnerable to random noise. The ICS8442 provides separate power supplies to isolate any high switching noise from the outputs to the internal PLL. V_{DD} and V_{DDA}, should be individually connected to the power supply plane through vias, and bypass capacitors should be used for each pin. To achieve optimum jitter performance, better power supply isolation is required. *Figure 2* illustrates how a 10Ω along |with a 10µF and a .01µF bypass capacitor should be connected to each V_{DDA} pin.

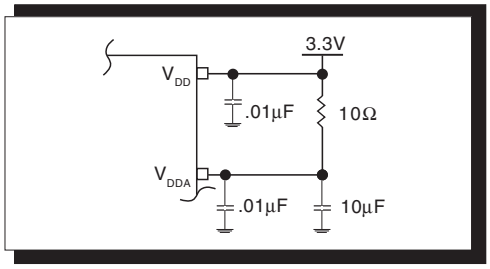

Figure 2. Power Supply Filtering

Crystal Input Interface

A crystal can be characterized for either series or parallel mode operation. The ICS8442 has a built-in crystal oscillator circuit. This interface can accept either a series or parallel crystal without additional components and generate frequencies with accuracy suitable for most applications. Additional accuracy can be achieved by adding two small capacitors C1 and C2 as shown in *Figure 3*. Typical results using parallel 18pF crystals are shown in Table 10.

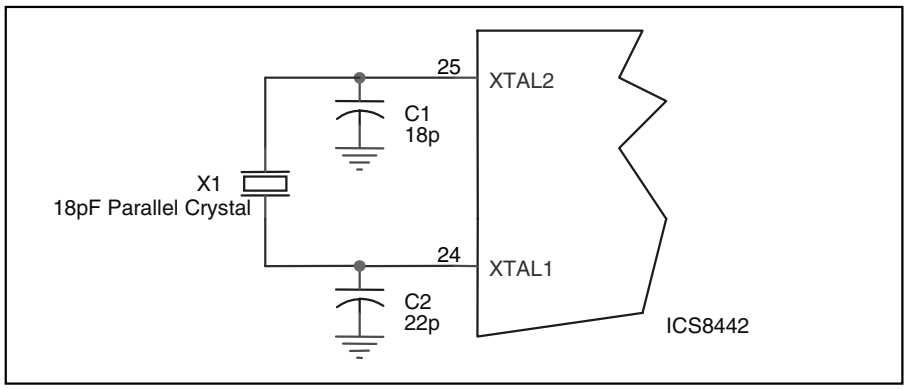

Figure 3. Crystal Input Interface

LVDS Driver Termination

A general LVDS interface is shown in *Figure 4.* In a 100Ω differential transmission line environment, LVDS drivers require a matched load termination of 100Ω across near the receiver input. For a multiple LVDS outputs buffer, if only partial outputs are used, it is recommended to terminate the un-used outputs.

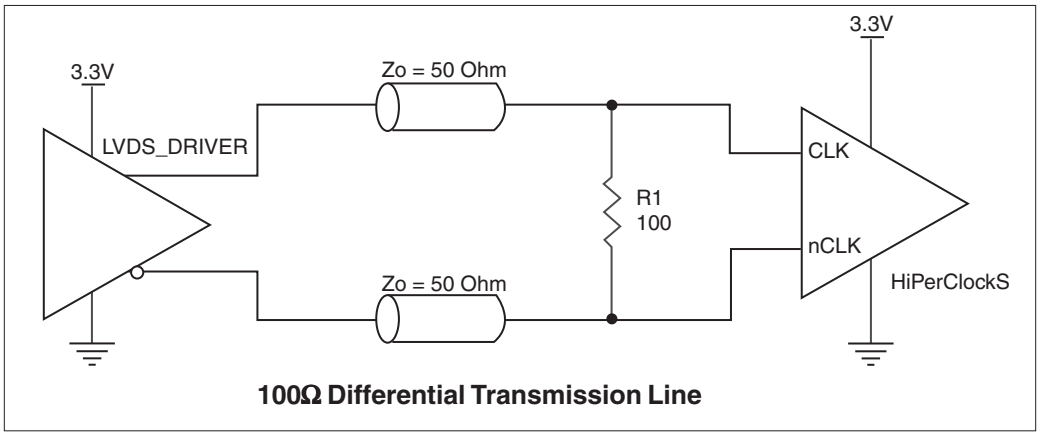

Figure 4. Typical LVDS Driver Termination

Layout Guideline

The schematic of the ICS8442 layout example used in this layout guideline is shown in *Figure 5A.* The ICS8442 recommended PCB board layout for this example is shown in *Figure 5B.* This layout example is used as a general guideline. The layout in the actual system will depend on the selected component types, the density of the components, the density of the traces, and the stack up of the P.C. board.

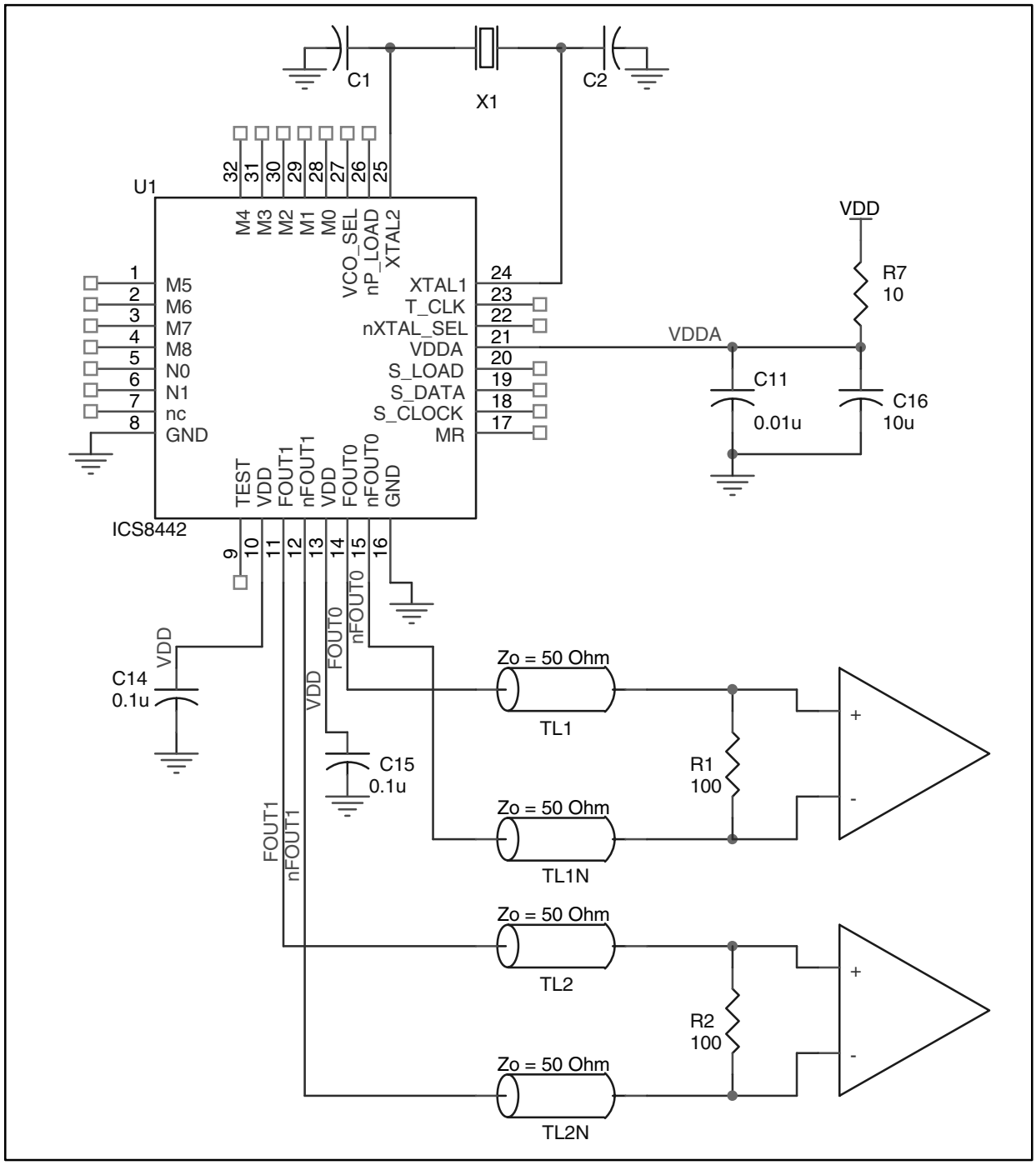

Figure 5A. Recommended Schematic Layout

The following component footprints are used in this layout example: All the resistors and capacitors are size 0603.

Power and Grounding

Place the decoupling capacitors C14 and C15 as close as possible to the power pins. If space allows, placing the decoupling capacitor at the component side is preferred. This can reduce unwanted inductance between the decoupling capacitor and the power pin generated by the via.

Maximize the pad size of the power (ground) at the decoupling capacitor. Maximize the number of vias between power (ground) and the pads. This can reduce the inductance between the power (ground) plane and the component power (ground) pins.

If V_{DDA} shares the same power supply with V_{DD}, insert the RC filter R7, C11, and C16 in between. Place this RC filter as close to the V_{DDA} as possible.

Clock Traces and Termination

The component placements, locations and orientations should be arranged to achieve the best clock signal quality. Poor clock signal quality can degrade the system performance or cause system failure. In the synchronous high-speed digital system, the clock signal is less tolerable to poor signal quality than other signals. Any ringing on the rising or falling edge or excessive ring back can cause system failure. The trace shape and the trace delay might be restricted by the available space on the board and the component location. While routing the traces, the clock signal traces should be routed first and should be locked prior to routing other signal traces.

- The traces with 50Ω transmission lines TL1 and TL2 at FOUT and nFOUT should have equal delay and run adjacent to each other. Avoid sharp angles on the clock trace. Sharp angle turns cause the characteristic impedance to change on the transmission lines.
- Keep the clock trace on same layer. Whenever possible, avoid any vias on the clock traces. Any via on the trace can affect the trace characteristic impedance and hence degrade signal quality.
- To prevent cross talk, avoid routing other signal traces in parallel with the clock traces. If running parallel traces is unavoidable, allow more space between the clock trace and the other signal trace.
- Make sure no other signal trace is routed between the clock trace pair.

The matching termination resistors R1 and R2 should be located as close to the receiver input pins as possible. Other termination scheme can also be used but is not shown in this example.

Crystal

The crystal X1 should be located as close as possible to the pins 24 (XTAL1) and 25 (XTAL2). The trace length between the X1 and U1 should be kept to a minimum to avoid unwanted parasitic inductance and capacitance. Other signal traces should not be routed near the crystal traces.

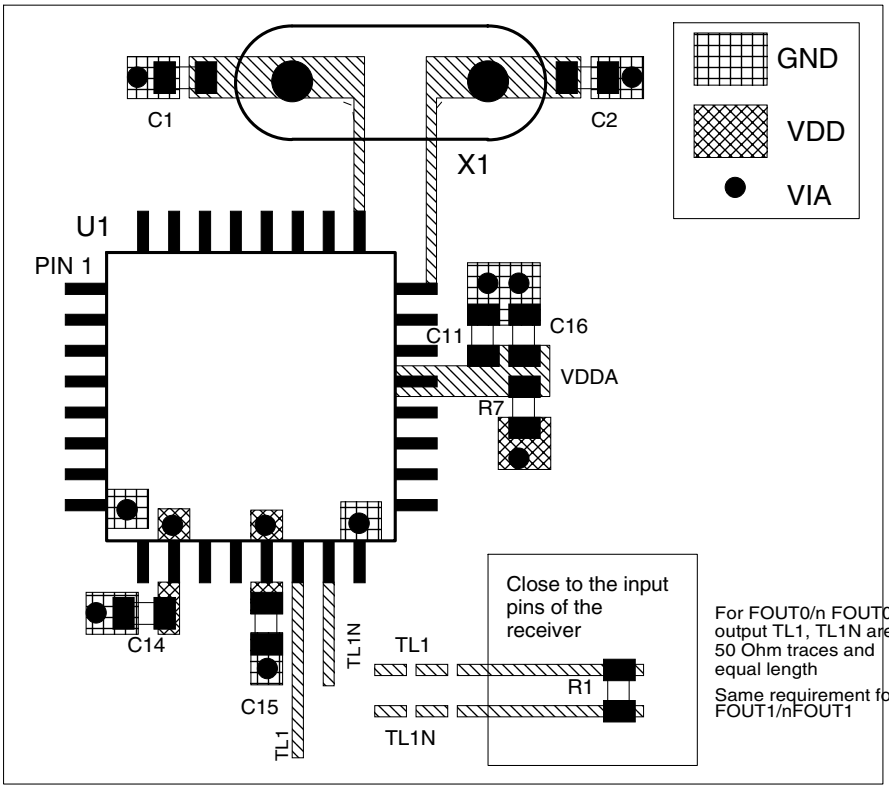

Figure 5B. PCB Board Layout for ICS8442

Reliability Information

Table 10. θ_{JA} vs. Air Flow Table for 32 Lead LQFP

θ_{JA} by Velocity (Linear Feet per Minute)	0	200	500
Single-Layer PCB, JEDEC Standard Test Boards	67.8°C/W	55.9°C/W	50.1°C/W
Multi-Layer PCB, JEDEC Standard Test Boards	47.9°C/W	42.1°C/W	39.4°C/W

NOTE: Most modern PCB designs use multi-layered boards. The data in the second row pertains to most designs.

Transistor Count

The transistor count for ICS8442 is: 3662

Package Outline - Y Suffix for 32 Lead LQFP

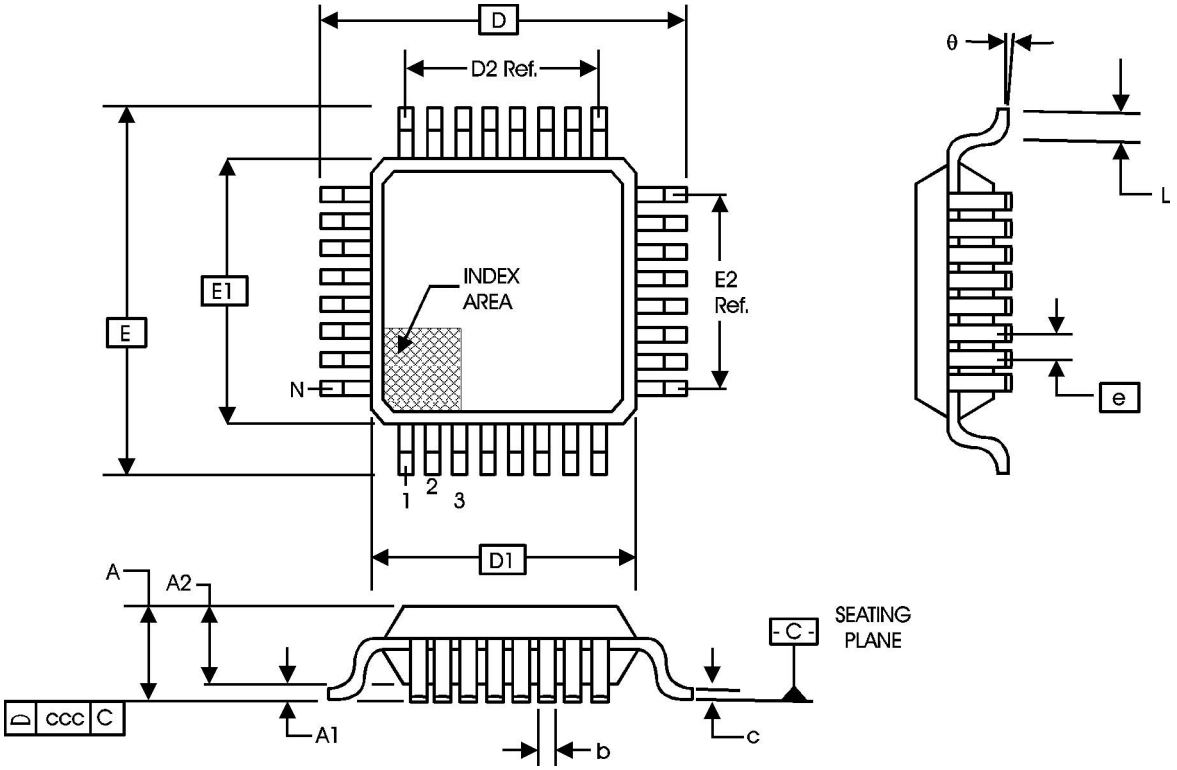

Table 11. Package Dimensions

JEDEC VARIATION ALL DIMENSIONS IN MILLIMETERS			
SYMBOL	BBA		
	MINIMUM	NOMINAL	MAXIMUM
N	32		
A	--	--	1.60
A1	0.05	--	0.15
A2	1.35	1.40	1.45
b	0.30	0.37	0.45
c	0.09	--	0.20
D	9.00 BASIC		
D1	7.00 BASIC		
D2	5.60 Ref.		
E	9.00 BASIC		
E1	7.00 BASIC		
E2	5.60 Ref.		
e	0.80 BASIC		
L	0.45	0.60	0.75
θ	0°	--	7°
ccc	--	--	0.10

Reference Document: JEDEC Publication 95, MS-026

Table 12. Ordering Information

Part/Order Number	Marking	Package	Count	Temperature
ICS8442AY	ICS8442AY	32 Lead LQFP	250 per tray	0°C to 85°C
ICS8442AYT	ICS8442AY	32 Lead LQFP on Tape and Reel	1000	0°C to 85°C
ICS8442AYLF	ICS8442AYLF	32 Lead "Lead-Free" LQFP	250 per tray	0°C to 85°C
ICS8442AYLFT	ICS8442AYLF	32 Lead "Lead-Free" LQFP on Tape and Reel	1000	0°C to 85°C

The aforementioned trademark, HiPerClockS™ is a trademark of Integrated Circuit Systems, Inc. or its subsidiaries in the United States and/or other countries.
While the information presented herein has been checked for both accuracy and reliability, Integrated Circuit Systems, Incorporated (ICS) assumes no responsibility for either its use or for infringement of any patents or other rights of third parties, which would result from its use. No other circuits, patents, or licenses are implied. This product is intended for use in normal commercial applications. Any other applications such as those requiring extended temperature range, high reliability, or other extraordinary environmental requirements are not recommended without additional processing by ICS. ICS reserves the right to change any circuitry or specifications without notice. ICS does not authorize or warrant any ICS product for use in life support devices or critical medical instruments.

REVISION HISTORY SHEET

Rev	Table	Page	Description of Change	Date
A		2	Corrected labels on the Parallel & Serial Load Operations diagram.	12/18/02
B	T1 T4A	3 5	Revised MR pin description. Power Supply table - changed I_{DD} to 155mA max. from 130mA max., changed I_{DDA} to 20mA max. from 15mA max., and changed I_{DDO} to 55mA max. from 45mA max.	2/13/03
B		9	Added LVDS Driver Termination Section.	3/12/03
C		1	General Description & Features - changed VCO min. from 200MHz to 250MHz and replaced throughout the datasheet in: (Functional Description pg2, T3C Program. Output Divider Func. Table pg4, and T5 Input Freq Charac. Table pg6). - Features - changed min. Output Frequency Range from 25MHz to 31.25MHz.	5/9/03
	T1	3	Pin Descriptions Table - revised XTAL1,XTAL2 pin description.	
	T2	3	Pin Characteristics Table - changed C_{IN} 4pF max. to 4pF typical.	
	T3B	4	Prog. VCO Freq. Func. Table - deleted 200 and 225 rows, does not apply.	
		5	Power Supply DC Characteristics Table - deleted V_{DDO} & I_{DDO} rows, does not apply.	
	T7	6	AC Characteristics Table - change F_{OUT} 25MHz min. to 31.25MHz min.	
C		2	Revised Parallel & Serial Load Operations diagram.	8/12/03
	T6	6	Crystal Characteristics Table - changed ESR from 70Ω max. to 50Ω max.	
		9	Deleted Table 10, *Typical Results of Crystal Input Interface Frequency Fine Tuning*	
C		5	Absolute Maximum Ratings - updated Outputs rating.	7/8/04
	T12	14	Ordering Information table - added "Lead-Free" part number.	

НИОКР СИСТЕМС

ООО «НИОКРсистемс» - это оперативные поставки широкого спектра электронных компонентов отечественного и импортного производства напрямую от производителей и с крупнейших мировых складов. Реализуемая нашей компанией продукция насчитывает более полумиллиона наименований.

Благодаря этому наша компания предлагает к поставке практически не ограниченный ассортимент компонентов как оптовыми, мелкооптовыми партиями, так и в розницу.

Благодаря развитой сети поставщиков, помогаем в поиске и приобретении экзотичных или снятых с производства компонентов.

Наша компания это:

- Гарантия качества поставляемой продукции
- Широкий ассортимент
- Минимальные сроки поставок
- Техническая поддержка
- Подбор комплектации
- Индивидуальный подход
- Гибкое ценообразование
- Работаем по 275 ФЗ

ООО «НИОКР СИТЕМС»
Москва, 125362, Россия, ул. Вишневая, д. 9, к. 1, Блок 104 а и 104 в

Телефон: 8 (495) 268-14-82
Email: n@nsistems.ru

ИНН: 7735154786
ОГРН: 1167746717709