ORIGINAL INSTRUCTIONS

PROPER USE GUIDELINES

Cumulative Trauma Disorders can result from the prolonged use of manually powered hand tools. Hand tools are intended for occasional use and low volume applications. A wide selection of powered application equipment for extended-use, production operations is available.

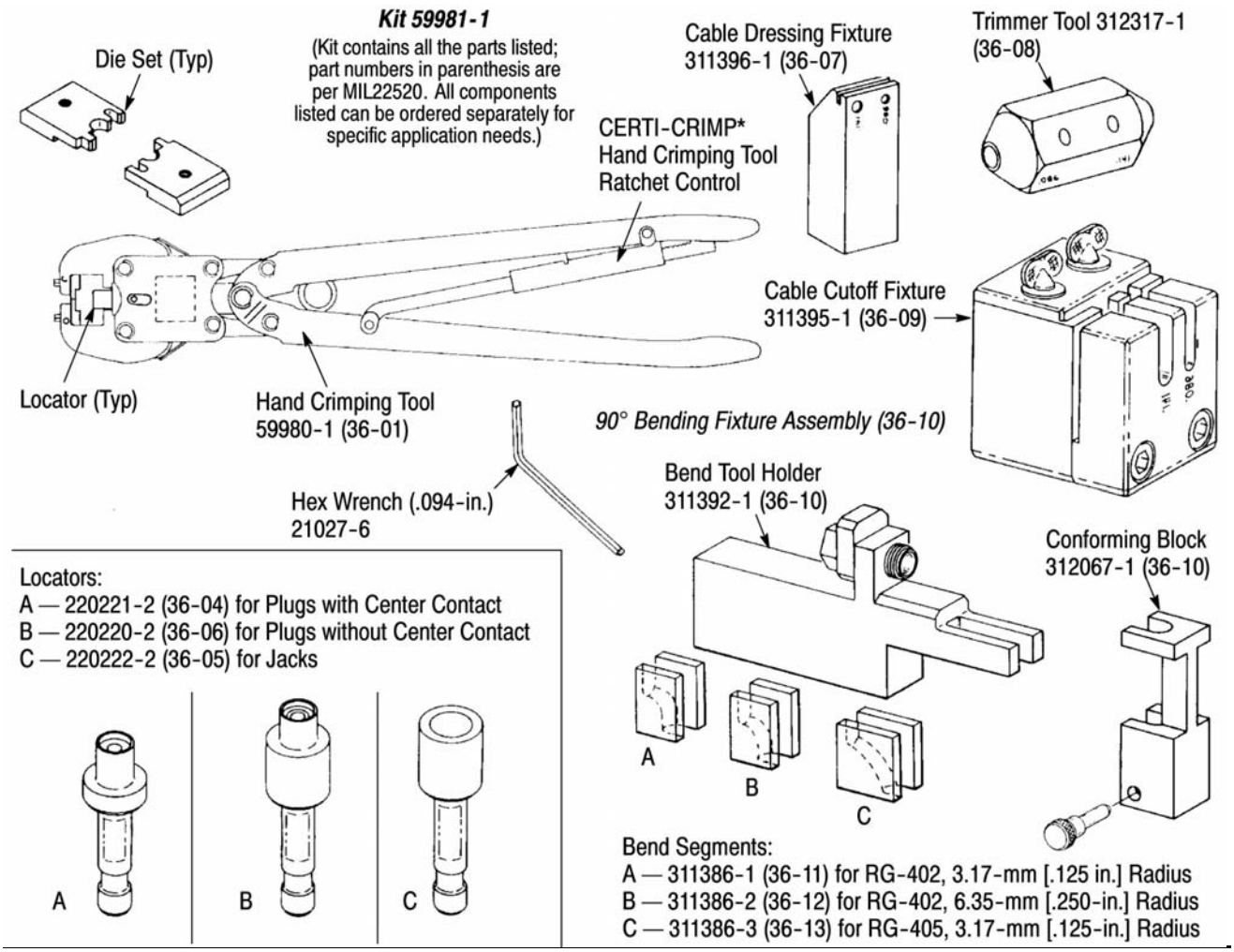


*Figure 1*

## 1. INTRODUCTION

Hand Crimping Tool and Cable Preparation Kit 59981-1 (shown in Figure 1) is used to prepare and terminate RG-402 (3.581 mm [.141 in.] outside diameter) and RG-405 (2.184 mm [.086 in.] outside diameter) semi-rigid coaxial cable onto SMA Series, N Series, and TNC Series connectors listed in Figure 2. Read these instructions thoroughly before using the kit.

*NOTE*
*Dimensions in this instruction sheet are in millimeters [with inches in brackets]. Figures and illustrations are for reference only and are not drawn to scale.*

Reasons for reissue of this instruction sheet are provided in Section 11, REVISION SUMMARY.

## 2. DESCRIPTION

The kit contains a hand crimping tool (with a CERTI-CRIMP hand crimping tool ratchet control), two interchangeable die sets (one for RG-402 cable and the other for RG-405 cable), and three locators for specific connector terminations. See Figure 1.

*NOTE*
*The tool ratchet ensures full crimping of the connector. Once engaged, the ratchet will not release until the handles have been FULLY closed. Do NOT adjust the ratchet.*

©2012 Tyco Electronics Corporation, a TE Connectivity Ltd. company
All Rights Reserved
*Trademark



TE Connectivity, TE connectivity (logo), and TE (logo) are trademarks. Other logos, product and/or company names may be trademarks of their respective owners.

| CONNECTOR TYPE FOR RG-402 CABLE | PART NUMBERS[1] | | | | | | |
|---|---|---|---|---|---|---|---|
| | TE | CATEGORY B | | CATEGORY F | | HAND TOOL 59980-1 | |
| | | Military M39012/ | TE | Military M39012/ | TE | Dies[2] | Locator[2] |
| Plug with Center Contact | --- | 79B3104 | 227743-1 | 79-3308 | 228634-1 | 312253-1 | 220221-2 |
| Plug with Center Contact and Safety Wire Holes | 228634-4 | --- | --- | --- | --- | 312253-1 | 220221-2 |
| Sealed Plug with Center Contact | 221328-1 | --- | --- | --- | --- | 312253-1 | 220221-2 |
| Sealed Plug with Center Contact and Safety Wire Holes | 221328-2 | --- | --- | --- | --- | 312253-1 | 220221-2 |
| Plug without Center Contact | 228635-2 | 92B3103 | 227531-1 | 92-3301 | 228635-1 | 312253-1 | 220220-2 |
| Sealed Plug with Center Contact and Safety Wire Holes | 221328-2 | --- | --- | --- | --- | 312253-1 | 220221-2 |
| Plug without Center Contact | 228635-2 | 92B3103 | 227531-1 | 92-3301 | 228635-1 | 312253-1 | 220220-2 |
| Plug without Center Contact and with Safety Wire Holes | 228635-4 | --- | --- | --- | --- | 312253-1 | 220220-2 |
| Sealed Plug without Center Contact | 221329-1 | --- | --- | --- | --- | 312253-1 | 313585-1‡ |
| Plug with Retractable Collar | 227531<br>227531-6 | --- | --- | --- | --- | 312962-1‡ | 220220-2 |
| Sealed Plug with Retractable Collar | 221329-3 | --- | --- | --- | --- | 312962-1‡ | 313585-1‡ |
| Sealed Plug with Retractable Collar and Safety Wire Holes | 221329-4 | --- | --- | --- | --- | 312962-1‡ | 313585-1‡ |
| Right-Angle Plug | 228626-2 | --- | --- | 80-3308 | 228626-1 | 312253-1 | 312173-1‡ |
| Right-Angle Plug with Safety Wire Holes | 228626-4 | --- | --- | --- | --- | 312253-1 | 312173-1‡ |
| Sealed Right-Angle Plug with Safety Wire Holes | 222066-2 | --- | --- | --- | --- | 312253-1 | 312173-1 |
| Jack | 228636-2 | --- | --- | 81-3208 | 228636-1 | 312253-1 | 220222-2 |
| 4-Hole Panel Jack | 228637-2 | --- | --- | --- | --- | 312253-1 | 220222-2 |
| Bulkhead Jack | 228638-2 | 83B3004 | 227746-1 | 83-3208 | 228638-1 | 312253-1 | 220222-2 |
| N Series Connectors:<br>Front-Mounted Jack<br>Rear-Mounted Jack<br>Plug | 228448-1<br>228658-1<br>228440-1 | --- | --- | --- | --- | 312253-1 | 220222-2 |
| TNC Series Connectors:<br>Rear-Mounted Jack Plug | 228502-1<br>228179-2 | --- | --- | --- | --- | 312253-1 | 220222-2 |
| Adapter Assemblies | 228446-1† | --- | --- | --- | --- | 312253-1 | 220222-2 |

1. Consult latest issue of MIL-C-39012 and QPL for current military dash numbers.
2. All items are included in Kit 59981-1, except those marked with ‡
† For both N Series and TNC Series

*Figure 2 (Cont'd)*

| CONNECTOR TYPE FOR RG-405 CABLE | PART NUMBERS[1] | | | | | | |
|---|---|---|---|---|---|---|---|
| | TE | CATEGORY B | | CATEGORY F | | HAND TOOL 59980-1 | |
| | | Military M39012/ | TE | Military M39012/ | TE | Dies[2] | Locator[2] |
| Plug with Center Contact | --- | 79B3103 | 227868-1 | 79-3307 | 228639-1 | 312253-2 | 220221-2 |
| Plug with Center Contact and Safety Wire Holes | 228639-4 | --- | --- | 79-3207 | 228639-3 | 312253-2 | 220221-2 |
| Short Plug with Center Contact | 221447-1<br>221447-2 | --- | --- | --- | --- | 313113-1‡ | 220221-3‡ |
| Short Plug with Center Contact and with Safety Wire Holes | 221447-3<br>221447-4 | --- | --- | --- | --- | 313113-1‡ | 220221-3‡ |
| Sealed Short Plug | 221812-1 | --- | --- | --- | --- | 313113-1‡ | 220221-3‡ |
| Sealed Short Plug with Safety Wire Holes | 221812-2 | --- | --- | --- | --- | 313113-1‡ | 220221-3‡ |
| Short Plug with Retractable Collar | 221447-5 | --- | --- | --- | --- | 313113-1‡ | 220221-3‡ |
| Right-Angle Plug | 228583-2 | --- | --- | 80-3307 | 228583-1 | 312253-2 | 312173-1‡ |
| Right-Angle Plug with Safety Wire Holes | 228583-4 | --- | --- | 80-3207 | 228583-3 | 312253-2 | 312173-1‡ |
| Sealed Right-Angle Plug | 222264-1 | --- | --- | --- | --- | 312253-1 | 312173-1 |
| Sealed Right-Angle Plug with Safety Wire Holes | 222264-2 | --- | --- | --- | --- | 312253-1 | 312173-1 |
| Jack | 228640-2 | --- | --- | 81-3207 | 228640-1 | 312253-2 | 220222-2 |
| 4-Hole Panel Jack | --- | 82B3003 | 227870-1 | 82-3207 | 228641-1 | 312253-2 | 220222-2 |
| Bulkhead Jack | 227871-3<br>228642-2 | 83B3003 | 227871-1 | 83-3207 | 228642-1 | 312253-2 | 220222-2 |
| TNC Series Connector: Rear-Mounted Jack | 228507-1 | --- | --- | --- | --- | 312253-2 | 220222-2 |
| Adapter Assembly (For TNC Series Only) | 228505-1† | --- | --- | --- | --- | 312253-2 | 220222-2 |

1. Consult latest issue of MIL-C-39012 and QPL for current military dash numbers.
2. All items are included in Kit 59981-1, except those marked with ‡
† For both N Series and TNC Series

*Figure 2 (End)*

The kit also includes the following cable preparation tools: cable dressing fixture, trimmer tool, cable cutoff fixture, and 90° bending fixture assembly.

*NOTE*
*Special die sets and special locators are NOT supplied with Kit 59981-1. These items MUST be ordered separately. They include: (1) RG-402 cable, Die Set 312962-1 for plugs with retractable collars, and Locator 313585-1 for sealed plugs without center contacts; and (2) RG-405 cable, Die Set 313113-1, and Locator 220221-3 for short plugs, and Locator 312173-1 for right-angle plugs.*

## 3. CABLE, CONNECTOR, AND LOCATOR SELECTION

Select the correct combination of cable, connector, hand tool locator, and die set from Figure 2.

## 4. CABLE PREPARATION

Semi-rigid cable must be properly prepared for termination. Correct use of cable preparation tools (cutoff fixture, dressing fixture, and trimming tool) will give the strip length and recommended pointing as shown in Figure 3, Detail A.

If TE Connectivity tools are not used for cable preparation, strip the cable to the dimension shown, and deburr (point) the center conductor as shown in Figure 3, Detail B, then proceed directly to Section 5, TOOL SETUP.

*Cable Preparation-Strip Length and Pointing*

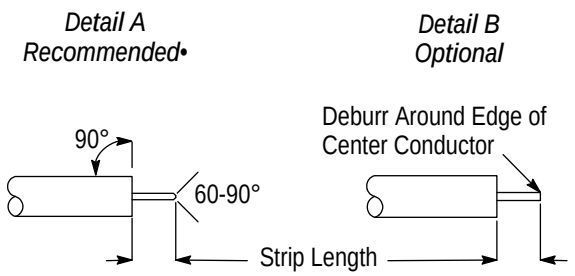


•Required on cables terminated to connectors without center contacts

*Note:* Not to Scale

| CABLE | STRIP LENGTH DIMENSION |
|---|---|
| RG-402, RG-405 | 2.16 ±0.13 [.085 ±.005] |

*Figure 3*

To prepare the cable:

1. Strip the outer cable jacket to the dimension provided in Figure 3. Make sure that the cut is at a 90° angle to the cable length.

2. Point the center conductor.

*NOTE*
*All cable terminated with connectors without center contacts must be pointed to ensure a sound connection.*

3. Trim the cable dielectric to the strip length dimension shown in Figure 3. Be careful to avoid nicking the center conductor.

4. Brush the prepared cable end to remove any metallic debris that might be present.

*NOTE*
*The cable can also be prepared by using Semi-Rigid Cable Stripping Machine 220211-2 with Stripping Kit 813599-[ ]. Refer to Customer Manual 409-2909 for detailed operating procedures.*

### 4.1. Cable Cutoff Fixture (Figure 4)

Clamp the cable to the fixture, with the cable in the proper groove, and cut the cable end squarely with a jeweler's saw with a 0.28 to 0.33 mm [.011 to .013 in.] blade thickness.

*NOTE*
*On preformed cables with 90° or 180° bends, a minimum straight cable length of 12.70 mm [.500 in.] is required to clear the tool head during crimping.*

*Cable Cutoff Fixture*

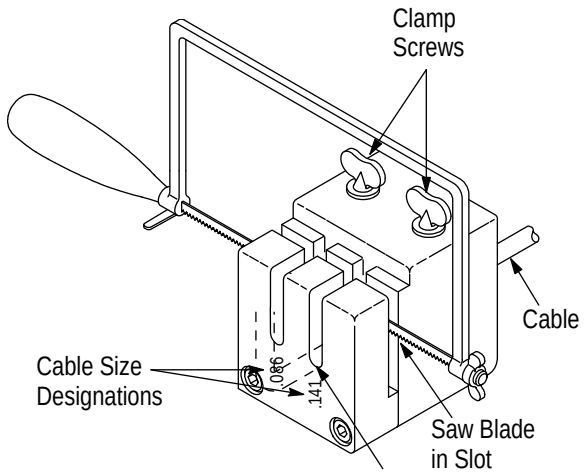


*NOTE:* Enter preformed cable from this end of fixture if cut end is desired up to 12.70 mm [.500 in.] of cable bend radius. Minimum straight cable length of 12.70 mm [.50 in.] is required for cable bend to clear tool head during crimping.

*Figure 4*

### 4.2. Cable Dressing Fixture and Trimmer Tool

1. Place the cable dressing fixture in a vise.

2. Insert the cable into the hole corresponding to the cable size as shown in Figure 5, Detail A.

3. Using the jeweler's saw, carefully cut through the cable shield while rotating the cable, maintaining pressure against the fixture.

*Using Cable Dressing Fixture*

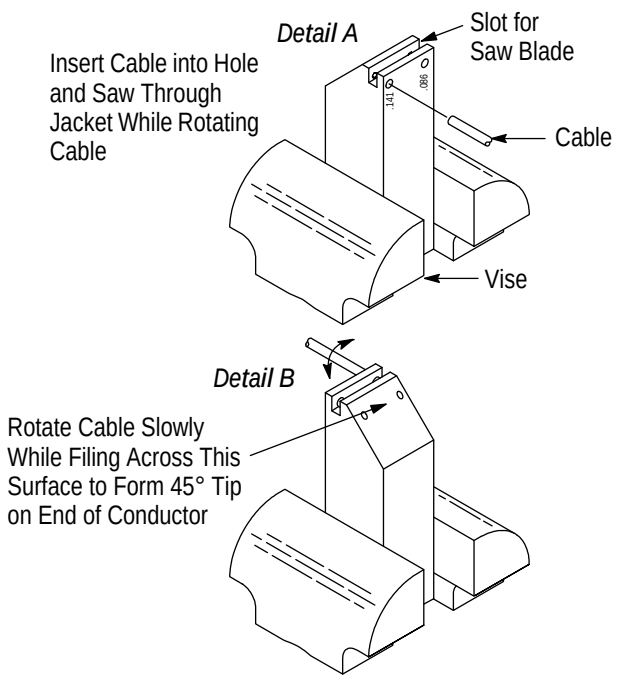


*Figure 5*

4. Remove the cable from the fixture. Using a razor blade, carefully cut and remove the dielectric to expose the center conductor.

*CAUTION*
*DO NOT nick or score the center conductor.*

To smooth the copper shield and dielectric, proceed as follows:

1. Slip the correct end of the trimmer tool over the exposed cable end. See Figure 6.

*Using Trimmer Tool*

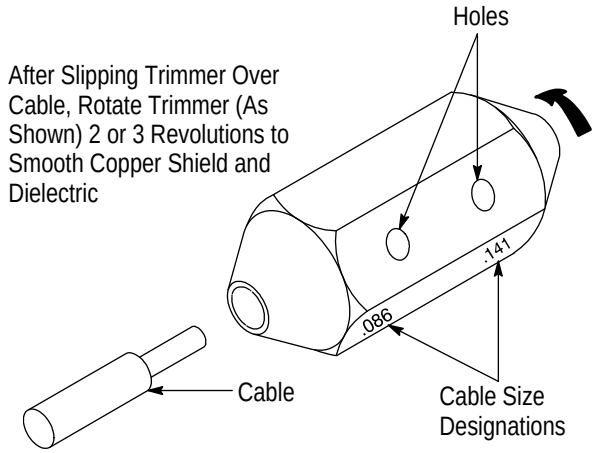


*Figure 6*

2. Push lightly against the cable while slowly rotating the trimmer tool clockwise several times.

3. Remove the trimmer tool and clean any chips from the cable end.

4. Re-insert the cable into the cable dressing fixture for pointing. Refer to Figure 5, Detail B. Keep pressure against the fixture and rotate the cable slowly while filing on the 45° surface with a small pillar file or mill file. Continue filing until the conductor offers no resistance to the file.

5. Remove the cable and brush off any chips.

*NOTE*
*A final inspection must be performed to ensure that no metal chips or burrs are present on the cable dielectric surface or on the cable shield inner or outer surfaces.*

## 5. TOOL SETUP (Figure 7)

Before prepared cable can be crimped to a connector, the hand crimping tool must be set up with the appropriate locator and die set. Proceed as follows:

1. Select the proper hand tool locator from Figure 2.

2. Loosen the locator locking screw, insert the locator into the tool head cavity, making sure that the locator is bottomed in the cavity, then re-tighten the locking screw. Refer to Figure 7, Detail A.

3. Select the proper die set for either RG-402 or RG-405 cable. Position each die on the respective tool jaw and make sure that the chamfer is oriented as shown in Figure 7, Detail A.

*CAUTION*
*An unacceptable crimp will result if the die chamfers are not positioned as shown.*

4. Fasten the dies to the jaws with the screws, but do not tighten the screws until the dies are aligned.

5. To align the dies, place the cable inside the locator and squeeze the tool handles to close the tool. Check for even alignment of the dies, as shown in Figure 7, Detail B, then tighten the screws to secure the dies.

## 6. CRIMPING PROCEDURE

*NOTE*
*Before crimping, insert the prepared cable into the BACK of the connector assembly until the cable bottoms on the shoulder of the connector assembly.*

### 6.1. For Connectors with Fixed Collars (Except Right Angle Connectors)

Figures 8 and 9 show typical plug and panel jack connectors with fixed collars.

Proceed as follows:

1. Carefully insert the cable into the connector until the cable bottoms on the shoulder of the connector.

*Tool Setup*

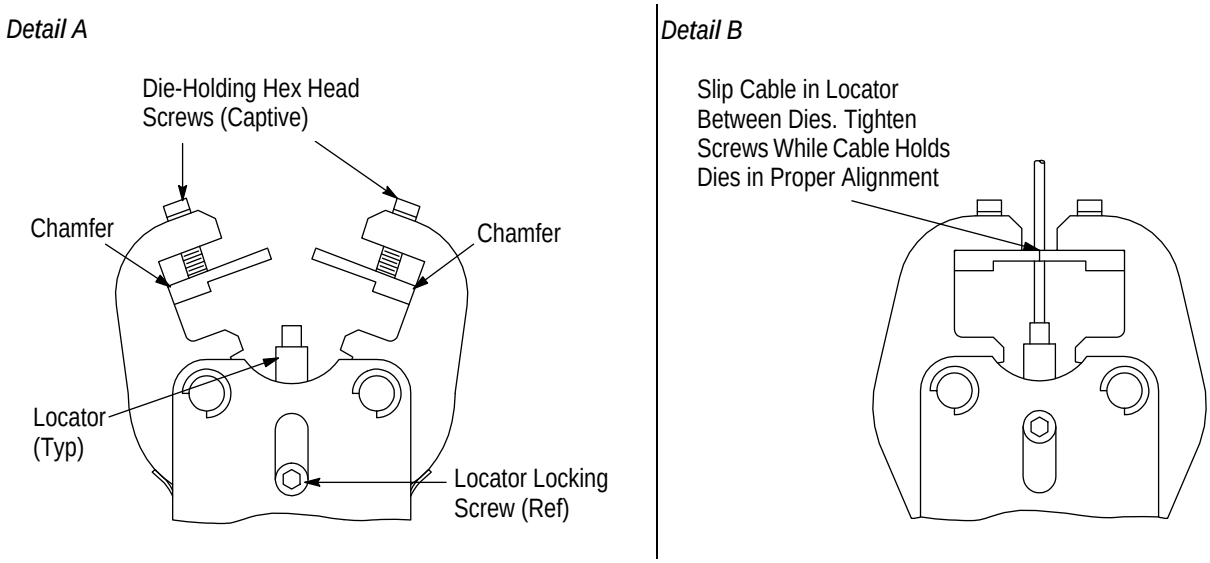


*Figure 7*

2. Place the connector and cable inside the tool locator, making sure that:

— the center conductor of center contact enters the locator hole

— the connector is seated squarely on the locator

— if crimping a panel jack to the cable, the sides of the panel jack should align with the tool jaws as shown in Figure 9

3. Support the cable-and-connector assembly, and squeeze the tool handles to complete the crimp as shown in Figure 9.

## 6.2. For Connectors with Retractable Collars

Connectors with sliding coupling nuts (shown in Figure 10) require Special Die Set 312962-1 which is not included in the kit and MUST be ordered separately.

Proceed as follows:

1. Slide the nut then the connector body, flange end first, onto the cable.

2. Place the connector body and cable inside the tool locator, making sure that the center conductor enters the locator hole, and that the coupling nut is positioned above the tool head.

*Crimping Connectors with Fixed Collars*
*(Except Right-Angle Connectors)*

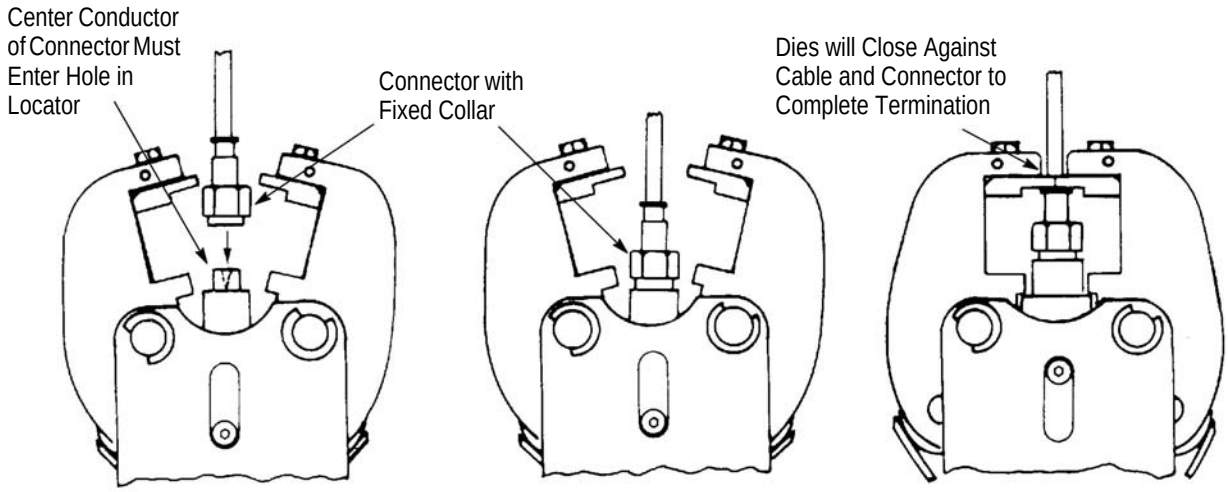


*Figure 8*

3. Squeeze the tool handles to crimp the connector body to the cable.

*Crimping Connectors with Fixed Collars*

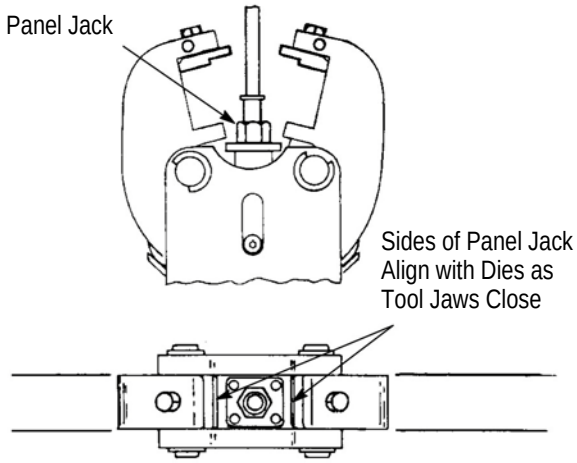


*Figure 9*

*Crimping Connectors with Retractable Collars*

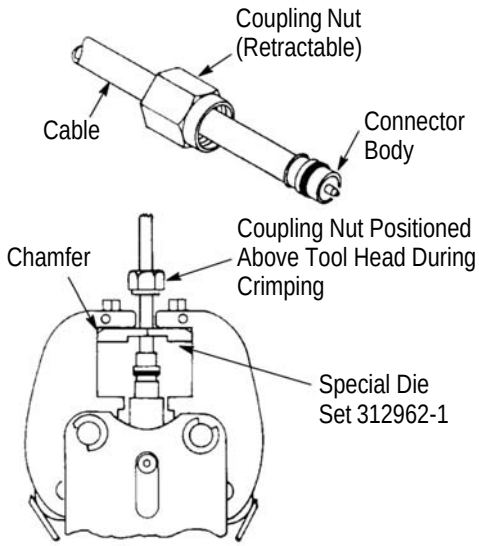


*Figure 10*

### 6.3. For Right-Angle Connectors

Right-angle connectors require Locator 312173-1 which is not included in the kit and MUST be ordered separately. Proceed as follows:

1. Slide the connector, flange end first, over the cable end as shown in Figure 11.

2. Place the connector and cable inside of the tool locator, making sure that:

— the recessed area of the connector body sits squarely on the locator knob

— the connector collar faces forward, as shown in Figure 11

3. Support the cable and connector assembly, and squeeze the tool handles together to complete the crimp.

*Crimping Right-Angle Connectors*

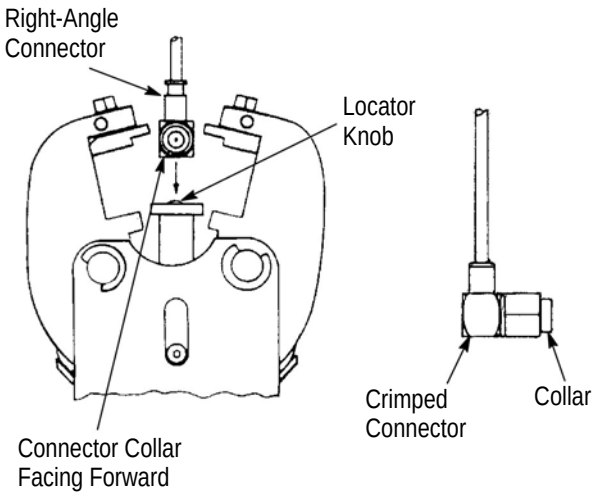


*Figure 11*

## 7. INTERNAL REFERENCE PLANES FOR CABLE

The dimensions shown in Figure 12 are from the cable-bottoming surface or plane in the connector to the mating reference plane.

## 8. CABLE BENDING

The 90° bending fixture assembly is used to make precise right-angle bends on the cable near SMA plugs as shown in Figure 13. Bends can have a radius of 3.18 mm [.125 in.] (on RG-402 or RG-405 cable), 6.35 mm [.250 in.] (on RG-402 cable only), or 1.57 mm [.062 in.] (on RG-405 cable only).

The spacer shown in Figure 14 must be positioned behind the dummy jack when bending:

— RG-402 cable to either 3.18 mm [.125 in.] or 6.35 mm [.250 in.] radii terminated onto plugs with center contacts

— RG-405 cable to 1.57 mm [.062 in.] or 3.18 mm [.125 in.] radii when terminated onto plugs with center contacts except Short Plugs 221447-[ ]. For short plugs, a special spacer is required and MUST be ordered separately from Special Kit 220224-2

Loosen the dummy jack to insert the spacer, and re-tighten the jack before proceeding.

*Plugs with Center Contacts (All Sizes)*

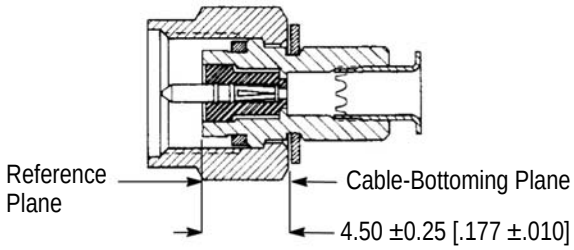


*Right-Angle Plugs*

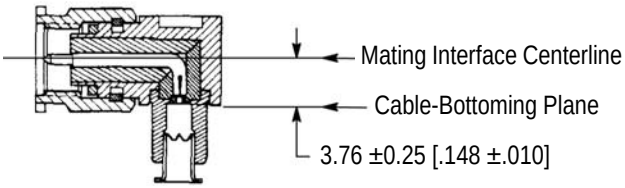


*Panel Jacks (All Sizes)*

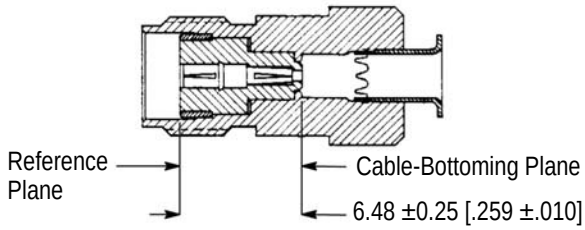


*Figure 12*

## 8.1. To Make 6.35 mm [.250 in.] Bends on RG-402 Cable or 3.18 mm [.125 in.] Bends on RG-405 Cable

1. Screw the terminated plug onto the dummy jack of the tool holder. See Figure 15.

2. Slip the appropriate bend segment under the cable as shown in Figure 15.

3. Using finger pressure, bend the cable around the segment to the desired angle, to a 90° maximum.

4. Unscrew the plug from the tool holder.

## 8.2. To Make 3.18 mm [.125 in.] Bends on RG-402 Cable

(Figure 16)

1. Make the 6.35 mm [.250 in.] radial bend as described in Paragraph 8.1, and remove the plug from the tool holder.

2. Replace the 6.35 mm [.250 in.] bend segment with the 3.18 mm [.125 in.] segment for RG-402 cable.

3. Re-attach the plug to the dummy jack of the tool holder.

4. Place the conforming block over the cable with the tongue of the block in the slot of the tool holder, as shown in Figure 16.

5. Insert the limiting pin and slide the block against the opening.

*90_ Bend Plug Assemblies*
*(Plug Applied Before Bending Cable)*

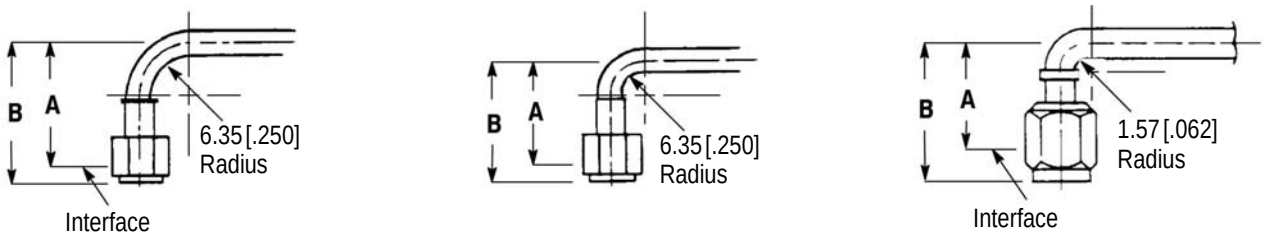


| SMA PLUG TYPE | CABLE SIZE | DIMENSION | | | | | |
|---|---|---|---|---|---|---|---|
| | | 6.35 [.250] RADIUS | | 3.18 [.125] RADIUS | | 1.57 [.062] RADIUS | |
| | | A | B | A | B | A | B |
| Plugs without Center Contact | RG-402 | 14.68 [.578] | 18.11 [.713] | 11.51 [.453] | 14.94 [.588] | --- | --- |
| Plugs without Center Contact | | 19.18 [.755] | 22.61 [.890] | 16.00 [.632] | 19.43 [.765] | --- | --- |
| Plugs with Center Contact | RG-405 | --- | --- | 15.34 [.604] | 18.75 [.738] | 13.72 [.540] | 17.14 [.675] |
| Short Plugs | | --- | --- | 12.70 [.500] | 15.88 [.625] | 11.10 [.437] | 14.27 [.562] |

*Figure 13*

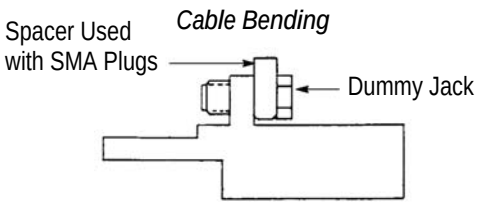


*Figure 14*

*Bending RG-402 Cable to 6.35 mm [.250 in.] Radius or RG-405 Cable to 3.18 mm [.125 in.] Radius*

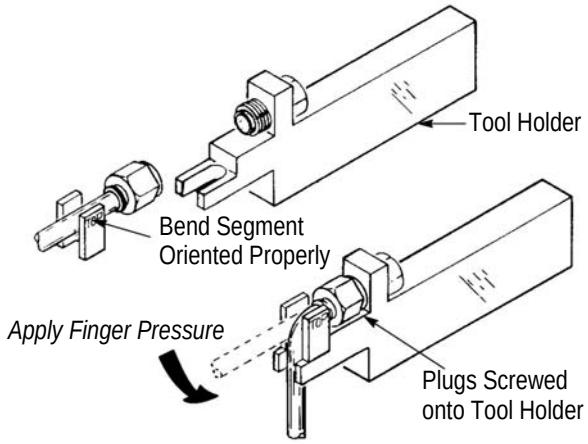


*Figure 15*

*Bending RG-402 Cable to 3.18 mm [.125 in.] Radius*

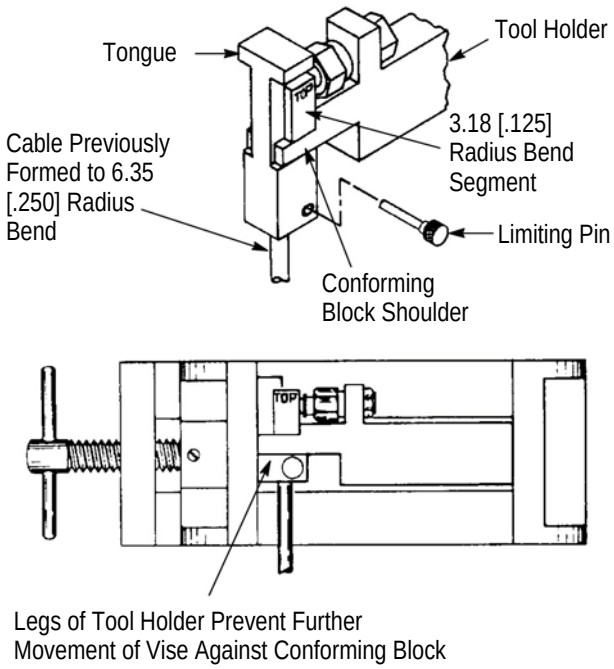


*Figure 16*

6. Place the assembly in a vise with a 69.85 mm [2.75 in.] opening.

*NOTE*
*Make sure that the shoulders of the conforming block bear on the bottom surface of the tool holder BEFORE applying pressure in the vise.*

7. Tighten the vise to force the conforming block into the slot. Continue to tighten until the legs of the tool holder prevent further movement of the vise jaws.

8. Remove the assembly from the vise, and unscrew the plug from the fixture.

9. Remove the conforming block and bend segment.

### 8.3. To Make 1.57 mm [.062 in.] Bends on RG-405 Cable

It is recommended that a special kit be used to make 1.57 mm [.062 in.] bends on RG-405 cable. Kit 220224-2 includes a limiting pin, a 90° bend tool body assembly, a 90° bend segment, and a conforming block. The figures referenced for the 6.35 mm [.250 in.] and 3.18 mm [.125 in.] bends will assist in making the 1.57 mm [.062 in.] bends. These steps are recommended:

1. Make the 3.18 mm [.125 in.] radial bend as described in Paragraph 8.1, and remove the plug from the tool holder.

2. Replace the 3.18 mm [.125 in.] bend segment with the special 1.57 mm [.062 in.] bend segment, which is a part of Kit 220224-2.

3. Re-attach the plug to the dummy jack of the tool holder.

4. Place the special 1.57 mm [.062 in.] conforming block over the cable with the tongue of the block in the tool holder slot. The conforming block is part of Kit 220224-2.

5. Insert the limiting pin and slide the block against the tool holder.

6. Place the assembly in a vise with a 69.85 mm [2.75 in.] opening.

7. Remove the assembly from the vise, and unscrew the plug from the fixture.

8. Remove the assembly from the vise, and unscrew the plug from the fixture.

9. Remove the special conforming block and special bend segment.

## 9. MAINTENANCE AND INSPECTION

Hand Crimping Tool and Cable Preparation Kit 59981-1 is inspected before shipment. The tool and kit should be inspected immediately upon arrival to ensure that they have not been damaged during shipment, and that they perform according to the criteria described in this sheet. If the tool and kit are damaged upon arrival, retain the shipping container, file a claim with the carrier, and notify TE immediately.

## 9.1. Daily Maintenance

1. Remove dust, moisture, and other contaminants from the tool with a clean brush or a soft, lint-free cloth. Do NOT use objects that could damage the tool.

2. Make sure that the proper retaining pins are in place and are secured with the proper retaining rings.

3. Make certain that all pins, pivot points, and bearing surfaces are protected with a THIN coat of any good SAE 20 motor oil. Do NOT oil excessively.

4. When the tool is not in use, keep the handles closed to prevent objects from becoming lodged in the crimping chambers and store the tool in a clean, dry area.

## 9.2. Periodic Inspection

Regular inspections should be performed by quality control personnel. A record of scheduled inspections should remain with the tool and/or be supplied to supervisory personnel responsible for the tool. Though recommendations call for at least one inspection per month, the inspection frequency should be based on the amount of use, working conditions, operator training and skill, and established company standards. These inspections should be performed in the following sequence:

### A. Visual Inspection

1. Remove all lubrication and accumulated film by immersing the tool (handles partially closed) in a suitable commercial degreaser that will not affect paint or plastic material.

2. Make certain that all retaining pins are in place and are secured with retaining rings. If replacements are necessary, refer to Section 10, REPLACEMENT AND REPAIR.

3. Inspect crimping chambers for pitted or chipped surfaces.

4. Close the tool handles until the ratchet releases, then allow handles to open freely. If they do not open quickly and fully, the spring is defective and must be replaced. Refer to Section 10, REPLACEMENT AND REPAIR.

### B. Gaging the Crimping Chambers

This inspection requires the use of a plug gage conforming to the dimensions listed in Figure 17. TE does not manufacture or market these gages. To gage the crimping chambers, proceed as follows:

1. Insert Die Set 312253-1 as described in Section 5, TOOL SETUP. Do NOT insert the locator.

2. Close the tool handles until the ram touches the stop surfaces. Refer to Figure 17.

*Suggested Plug Gage Design*

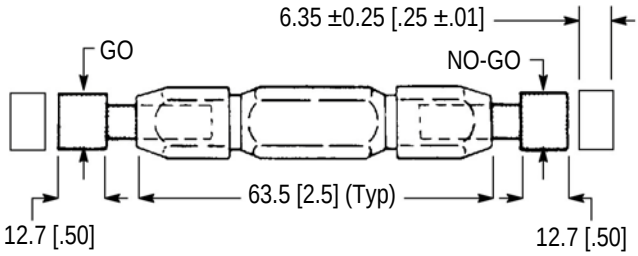


| GAGE ELEMENT DIAMETERS | |
|---|---|
| GO | NO-GO |
| 15.915-15.920 [.6266-.6268] | 16.078-16.083 [.6330-.6332] |

*Inspection of Crimping Chamber*

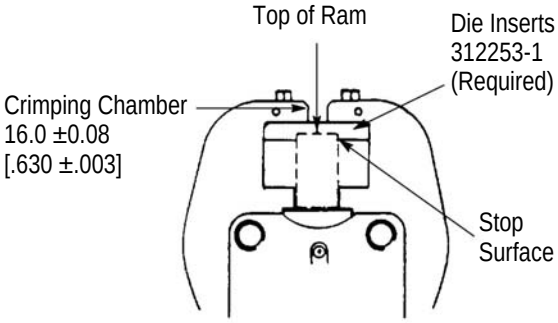


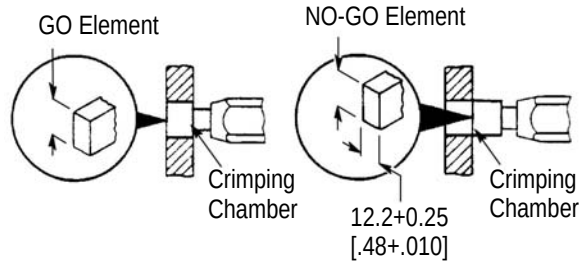


GO element must pass completely through the crimping chamber.

NO-GO element may enter partially, but must not pass completely through the crimping chamber.

*Figure 17*

3. Align the GO element of the gage with the crimping chamber so that the top and bottom of the gage align with the surfaces of the die inserts and ram.

4. Push the element straight into the crimping chamber without using force. The GO element must pass completely through the crimping chamber as shown in Figure 17.

5. Align the NO-GO element and try to insert it straight into the crimping chamber. The NO-GO element may start entry, but must not pass completely through the crimping chamber, as shown in Figure 17.

If the crimping chamber conforms to the gage inspection, the tool is considered dimensionally correct. If the crimping chamber does not conform to the inspection, the tool must be repaired before returning it to service. Refer to Section 10, REPLACEMENT AND REPAIR.

For additional information concerning the use of the plug gage, refer to Instruction Sheet 408-7424.

### C. CERTI-CRIMP Hand Crimping Tool Ratchet Control Inspection

Obtain a .0254 mm [.001 in.] shim that is suitable for checking the clearance between the ram and stop surfaces. To inspect the ratchet:

1. Squeeze the tool handles together until the ratchet releases. Allow the handles to open FULLY.

2. Place the shim between the top of the ram and the stop surfaces.

3. Support the shim and squeeze the tool handles together until the ratchet releases, then HOLD the tool handles in this position.

4. Check the clearance between the ram and the stop by trying to remove the shim. If shim cannot be removed, lubricate it with a THIN coat of any good SAE 20 motor oil and return it to service. If the shim can be removed, the ratchet is out of adjustment and must be repaired. Refer to Section 10, REPLACEMENT AND REPAIR.

## 10. REPLACEMENT AND REPAIR

Customer-replaceable parts for the cable preparation kit are listed in Figure 18, and customer-replaceable parts for the hand crimping tool are listed in Figure 19. A complete inventory should be stocked and controlled to prevent lost time when replacement of parts is necessary. Replacement parts can be ordered from:

CUSTOMER SERVICE (038-035)
TYCO ELECTRONICS CORPORATION
PO BOX 3608
HARRISBURG PA 17105-3608

Parts other than those specified in Figures 18 and 19 must be replaced to ensure correct operation of the tool. For customer repair service, please contact an TE Representative at 1-800-526-5136.

| CABLE PREPARATION KIT REPLACEMENT PARTS | | |
|---|---|---|
| TE PART NUMBER | MILITARY PART NUMBER 22520/ | DESCRIPTION |
| 59980-1 | 36-01 | Hand TooL (Locator and Dies Not Included with Tool) |
| 220220-2 | 36-06 | Plug Locator without Center Contact |
| 220221-2 | 36-04 | Plug Locator with Center Contact |
| 220222-2 | 36-05 | Jack Locator |
| 312253-1 | 36-03 | Dies (2 for RG-402 Cable) |
| 312253-2 | 36-02 | Dies (2 for RG-405 Cable) |
| 21027-6 | --- | Hex Wrench, .0938-in. |
| 311395-1 | 36-09 | Cutoff Fixture |
| 311396-1 | 36-07 | Cable Dressing Fixture |
| 312317-1 | 36-08 | Trimmer Tool |
| 220224-1 | 36-10 | 90_ Bending Fixture Assembly |
| 311386-3 | 36-13 | Bend Segment, RG-405, 3.18 mm [.125 in.] Radius |
| 311386-2 | 36-12 | Bend Segment, RG-402, 6.35 mm [.250 in.] Radius |
| 311386-1 | 36-11 | Bend Segment, RG-402, 3.18 mm [.125 in.] Radius |
| 311392-1 | 36-10 | Bend Tool Holder |
| 312067-1 | 36-10 | Conforming Block |
| 307581-1 | 36-10 | Limiting Pin |
| 13126-1 | --- | Carrying Case |
| 13127-1 | --- | Case Insert |

*Figure 18*

## 11. REVISION SUMMARY

- Updated document to corporate requirements
- Changed dimension in Figure 17

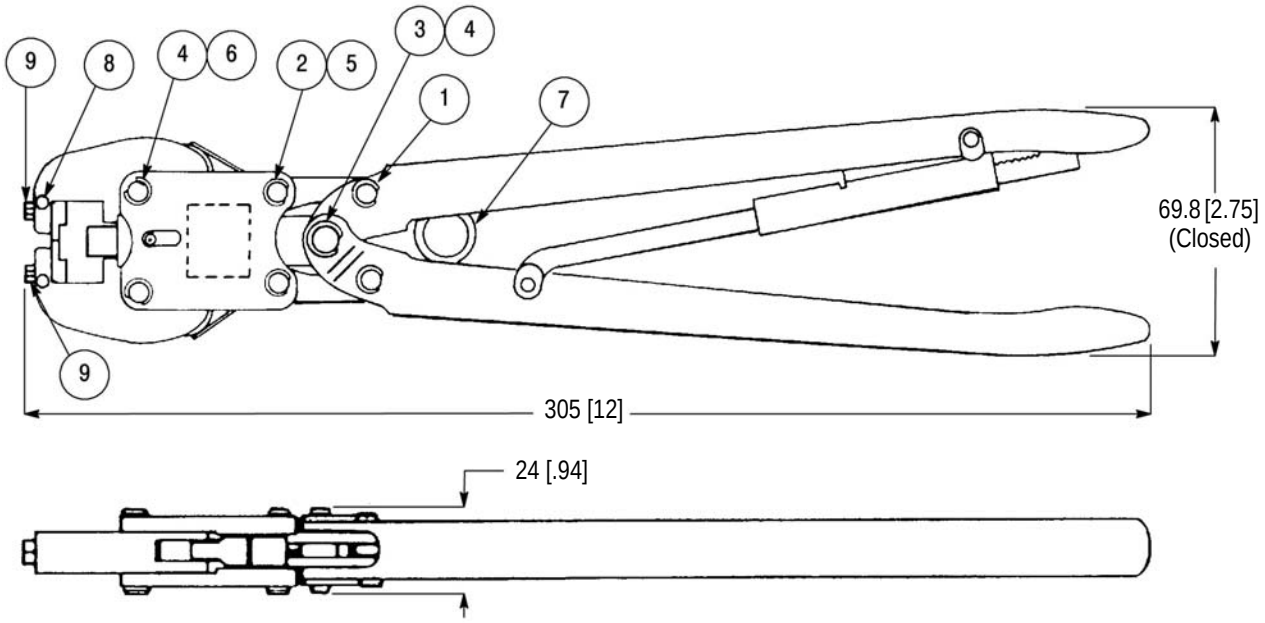


**Weight:** 0.9 kg [2 lb]

| HAND CRIMPING TOOL REPLACEMENT PARTS | | | |
|---|---|---|---|
| ITEM | PART NUMBER | DESCRIPTION | QTY PER TOOL |
| 1 | 300388 - | PIN. Retaining | 2 |
| 2 | 21045-3 | RING, Retaining | 8 |
| 3 | 300389 | PIN. Retaining | 1 |
| 4 | 21045-6 | RING, Retaining | 6 |
| 5 | 305340 | PIN. Retaining | 2 |
| 6 | 305340 | PIN. Retaining | 2 |
| 7 | 2-304668-9 | SPRING | 1 |
| 8 | 21028-5 | PIN, Slotted Spring | 2 |
| 9 | 312065-1 | SCREW, Special | 2 |

*Figure 19*

НИОКР СИСТЕМС

**ООО «НИОКРсистемс» -** это оперативные поставки широкого спектра электронных компонентов отечественного и импортного производства напрямую от производителей и с крупнейших мировых складов. Реализуемая нашей компанией продукция насчитывает более полумиллиона наименований.

Благодаря этому наша компания предлагает к поставке практически не ограниченный ассортимент компонентов как оптовыми, мелкооптовыми партиями, так и в розницу.

Благодаря развитой сети поставщиков, помогаем в поиске и приобретении экзотичных или снятых с производства компонентов.

## Наша компания это:

- Гарантия качества поставляемой продукции
- Широкий ассортимент
- Минимальные сроки поставок
- Техническая поддержка
- Подбор комплектации
- Индивидуальный подход
- Гибкое ценообразование
- Работаем по 275 ФЗ

ООО «НИОКР СИТЕМС»
Москва, 125362, Россия, ул. Вишневая, д. 9, к. 1, Блок 104 а и 104 в

Телефон: 8 (495) 268-14-82
Email: n@nsistems.ru

ИНН: 7735154786
ОГРН: 1167746717709