42095

NEGATIVE HIGH TEMPERATURE REGULATOR

Mii

HYBRID MICROELECTRONICS PRODUCTS DIVISION

Features:

- Output current to 1.5 amps
- Input voltage to -30V
- Internal short circuit protection, foldback and current limiting
- Storage Temperature +250°C
- 200°C Operating temperature

Applications:

- Logging while drilling
- Measuring while drilling (down-hole applications)
- Other harsh environments
- Used as military and industrial devices
- Designed for use in high temperature environments

DESCRIPTION

The 42095 series of regulators covers the voltage range from -5 VDC through -30 VDC. These regulators are fabricated using hybrid techniques and will operate at temperatures up to +200°C case. These devices are complete with internal short circuit protection which includes voltage shutdown and current foldback. The 42095 series regulators normally do not require any additional components. However, for good design practice, an external filter cap should be installed at the input, as close to the case as possible.

ABSOLUTE MAXIMUM RATINGS AT 200°C Case temperature

Output Current (I_{OUT}) 1.5A
Input Voltage (V_{IN}) ..... -38VDC

Operating Temperature (T_C) ..... 200°C
Storage Temperature ..... –65°C to 200°C
Power Dissipation (P_d) 25W

TABLE 1 (see note)

TYPE	V_{OUT} VDC	MAX I_{OUT} A	I_{KNEE} TYP A
42095-005	-5	1.5	2.0
42095-012	-12	1.5	2.0
42095-015	-15	1.5	2.0
42095-018	-18	1.5	2.0
42095-024	-24	1.5	2.0
42095-030	-30	1.5	2.0

NOTE: Under condition ($V_{IN} - V_{OUT} \times I_{OUT}) \leq 25$ watts at 200°C. Micropac can provide custom output voltages between -5VDC and -30VDC.

Micropac Industries cannot assume any responsibility for any circuits shown or represent that they are free from patent infringement.
Micropac reserves the right to make changes at any time in order to improve design and to supply the best product possible.

MICROPAC INDUSTRIES, INC. HYBRID MICROELECTRONICS PRODUCTS DIVISION • 905 E. Walnut St., Garland, TX 75040 • (972) 272-3571 • Fax (972) 494-2281
www.micropac.com E-MAIL: hybridsales@micropac.com **12/14/01**

ELECTRICAL CHARACTERISTICS

PARAMETER	TEST CONDITIONS	TEMPERATURE CASE TEMP	TYPICAL
*Output Voltage	I_{OUT} = 300 mA V_{IN} = V_{OUT} +3VDC	+25°C to +200°C	V_{OUT} ± 1.0%
*Line Regulation	V_{IN} = V_{OUT} +3VDC to V_{IN} = 38 V I_{OUT} = 50 mA	+25°C to +200°C	V_{OUT} ± 0.3%
Load Regulation	V_{IN} = V_{OUT} +5VDC I_{OUT} = 50 to 300mA	+25°C to +200°C	V_{OUT} ± 0.5%
Ripple Rejection at 120 Hz	V_{IN} = V_{OUT} +5VDC	+25°C	-60dB
Standby Current	V_{IN} = V_{OUT} +5VDC I_{OUT} = 0	+25°C	30mA
Short Circuit Current	V_{IN} = V_{OUT} +5VDC	+25°C	400mA
Short Circuit Current	V_{IN} = V_{OUT} +5VDC	+200°C	200mA
Foldback Current (knee)	V_{IN} = V_{OUT} +5VDC	+25°C	2A
Foldback Current (knee)	V_{IN} = V_{OUT} +5VDC	+200°C	1.5A
Noise Output	V_{IN} = V_{OUT} +5VDC I_{OUT} = 300 mA	+25°C	2mVRMS
Differential Voltage * ($\Delta V = V_{IN} - V_{OUT}$)	I_{OUT} = 300 mA	+25°C to +200°C	3 VDC MIN

*V_{IN} = 10V Min

Micropac Industries cannot assume any responsibility for any circuits shown or represent that they are free from patent infringement.
Micropac reserves the right to make changes at any time in order to improve design and to supply the best product possible.

Mechanical Configuration

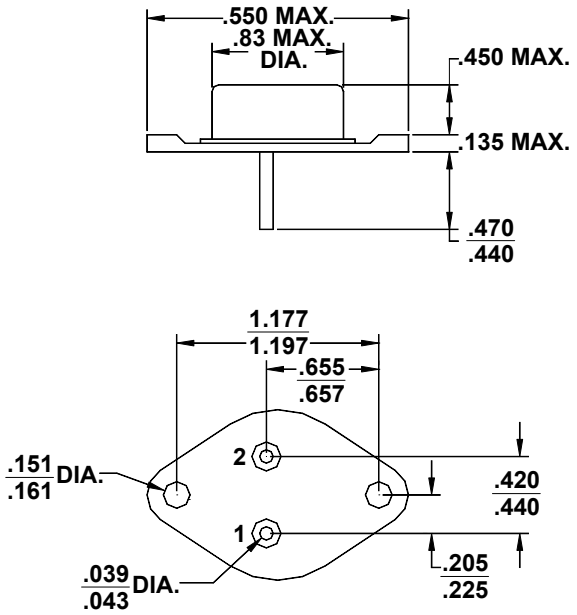

Typical Connection Diagram

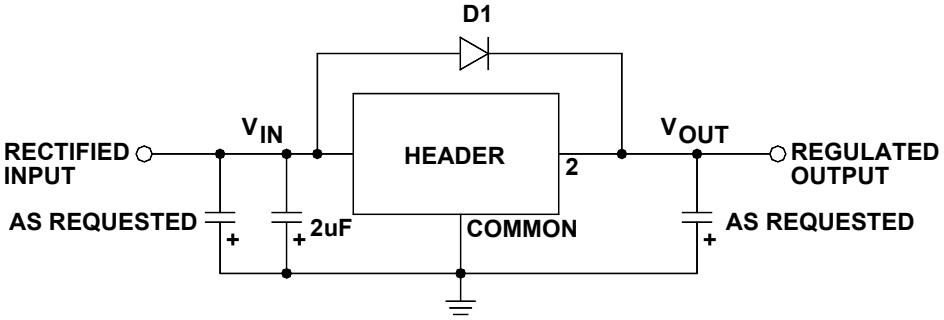

Electrical Connection	
Case	V_{IN}
Pin 1	Ground
Pin 2	V_{OUT}

Micropac Industries cannot assume any responsibility for any circuits shown or represent that they are free from patent infringement.
Micropac reserves the right to make changes at any time in order to improve design and to supply the best product possible.

НИОКР СИСТЕМС

ООО «НИОКРсистемс» - это оперативные поставки широкого спектра электронных компонентов отечественного и импортного производства напрямую от производителей и с крупнейших мировых складов. Реализуемая нашей компанией продукция насчитывает более полумиллиона наименований.

Благодаря этому наша компания предлагает к поставке практически не ограниченный ассортимент компонентов как оптовыми, мелкооптовыми партиями, так и в розницу.

Благодаря развитой сети поставщиков, помогаем в поиске и приобретении экзотичных или снятых с производства компонентов.

Наша компания это:

- Гарантия качества поставляемой продукции
- Широкий ассортимент
- Минимальные сроки поставок
- Техническая поддержка
- Подбор комплектации
- Индивидуальный подход
- Гибкое ценообразование
- Работаем по 275 ФЗ

ООО «НИОКР СИТЕМС»
Москва, 125362, Россия, ул. Вишневая, д. 9, к. 1, Блок 104 а и 104 в

Телефон: 8 (495) 268-14-82
Email: n@nsistems.ru

ИНН: 7735154786
ОГРН: 1167746717709