# Internally Trimmed Precision IC Multiplier

# AD534

## FEATURES

**Pretrimmed to ±0.25% maximum 4-quadrant error (AD534L)**
**All inputs (X, Y, and Z) differential, high impedance for $[(X_1 - X_2)(Y_1 - Y_2)/10\ V] + Z_2$ transfer function**
**Scale factor adjustable to provide up to ×100 gain**
**Low noise design: 90 µV rms, 10 Hz to10 kHz**
**Low cost, monolithic construction**
**Excellent long-term stability**

## APPLICATIONS

**High quality analog signal processing**
**Differential ratio and percentage computations**
**Algebraic and trigonometric function synthesis**
**Wideband, high crest rms-to-dc conversion**
**Accurate voltage controlled oscillators and filters**
**Available in chip form**

## FUNCTIONAL BLOCK DIAGRAM

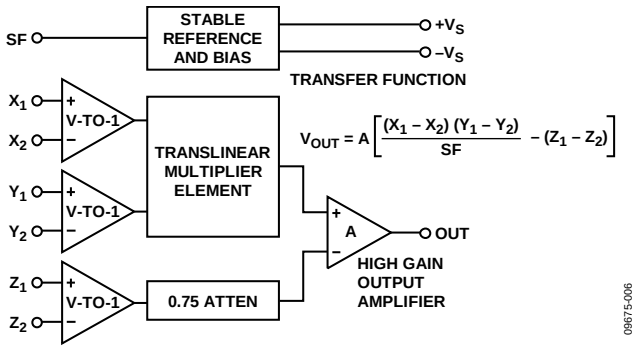


*Figure 1.*

## GENERAL DESCRIPTION

The AD534 is a monolithic laser trimmed four-quadrant multiplier divider having accuracy specifications previously found only in expensive hybrid or modular products. A maximum multiplication error of ±0.25% is guaranteed for the AD534L without any external trimming. Excellent supply rejection, low temperature coefficients and long-term stability of the on-chip thin film resistors and buried Zener reference preserve accuracy even under adverse conditions of use. It is the first multiplier to offer fully differential, high impedance operation on all inputs, including the Z input, a feature that greatly increases its flexibility and ease of use. The scale factor is pretrimmed to the standard value of 10.00 V; by means of an external resistor, this can be reduced to values as low as 3 V.

The wide spectrum of applications and the availability of several grades commend this multiplier as the first choice for all new designs. The AD534J (±1% maximum error), AD534K (±0.5% maximum), and AD534L (±0.25% maximum) are specified for operation over the 0°C to +70°C temperature range. The AD534S (±1% maximum) and AD534T (±0.5% maximum) are specified over the extended temperature range, −55°C to +125°C. All grades are available in hermetically sealed TO-100 metal cans and SBDIP packages. AD534K, AD534S, and AD534T chips are also available.

**Rev. C**
**Information furnished by Analog Devices is believed to be accurate and reliable. However, no responsibility is assumed by Analog Devices for its use, nor for any infringements of patents or other rights of third parties that may result from its use. Specifications subject to change without notice. No license is granted by implication or otherwise under any patent or patent rights of Analog Devices. Trademarks and registered trademarks are the property of their respective owners.**

**One Technology Way, P.O. Box 9106, Norwood, MA 02062-9106, U.S.A.**
**Tel: 781.329.4700** **www.analog.com**
**Fax: 781.461.3113** **©1977–2011 Analog Devices, Inc. All rights reserved.**

# TABLE OF CONTENTS

Features ... 1
Applications ... 1
Functional Block Diagram ... 1
General Description ... 1
Revision History ... 2
Specifications ... 3
Absolute Maximum Ratings ... 7
  Thermal Resistance ... 7
  ESD Caution ... 7
Pin Configurations and Function Descriptions ... 8
Typical Performance Characteristics ... 10
Functional Description ... 12
Provides Gain with Low Noise ... 12
  Operation as a Multiplier ... 12
  Operation as a Squarer ... 13
  Operation as a Divider ... 13
  Operation as a Square Rooter ... 14
  Unprecedented Flexibility ... 14
Applications Information ... 15
Outline Dimensions ... 17
  Ordering Guide ... 18

## REVISION HISTORY

**4/11—Rev. B to Rev. C**

Changes to Features Section, Figure 1, and General Description Section ... 1
Added Pin Configurations and Function Descriptions Section ... 8
Moved Provides Gain with Low Noise Section ... 12
Moved Unprecedented Flexibility Section ... 14
Updated Outline Dimensions ... 17
Changes to Ordering Guide ... 18

# SPECIFICATIONS

$T_A$ = 25°C, ±$V_S$ = ±15 V, R ≥ 2 kΩ, all minimum and maximum specifications are guaranteed, unless otherwise noted.

**Table 1.**

| Parameter | AD534J Min | AD534J Typ | AD534J Max | AD534K Min | AD534K Typ | AD534K Max | AD534L Min | AD534L Typ | AD534L Max | Unit |
|---|---|---|---|---|---|---|---|---|---|---|
| MULTIPLIER PERFORMANCE | | | | | | | | | | |
| Transfer Function | | $\frac{(X_1-X_2)(Y_1-Y_2)}{10\ \text{V}}+Z_2$ | | | $\frac{(X_1-X_2)(Y_1-Y_2)}{10\ \text{V}}+Z_2$ | | | $\frac{(X_1-X_2)(Y_1-Y_2)}{10\ \text{V}}+Z_2$ | | |
| Total Error[1] (−10 V ≤ X, Y ≤ +10 V) | | | ±1.0[2] | | | ±0.5[2] | | | ±0.25[2] | % |
| $T_A = T_{MIN}$ to $T_{MAX}$ | | ±1.5 | | | ±1.0 | | | ±0.5 | | % |
| Total Error vs. Temperature | | ±0.022 | | | ±0.015 | | | ±0.008 | | %/°C |
| Scale Factor Error (SF = 10.000 V Nominal)[3] | | ±0.25 | | | ±0.1 | | | ±0.1 | | % |
| Temperature Coefficient of Scaling Voltage | | ±0.02 | | | ±0.01 | | | ±0.005 | | %/°C |
| Supply Rejection (±15 V ± 1 V) | | ±0.01 | | | ±0.01 | | | ±0.01 | | % |
| Nonlinearity, X (X = 20 V p-p, Y = 10 V) | | ±0.4 | | | ±0.2 | ±0.3[2] | | ±0.10 | ±0.12[2] | % |
| Nonlinearity, Y (Y = 20 V p-p, X = 10 V | | ±0.2 | | | ±0.1 | ±0.1[2] | | ±0.005 | ±0.1[2] | % |
| Feedthrough[4], X (Y Nulled, X = 20 V p-p 50 Hz) | | ±0.3 | | | ±0.15 | ±0.3[2] | | ±0.05 | ±0.12[2] | % |
| Feedthrough[4], Y (X Nulled, Y = 20 V p-p, 50 Hz) | | ±0.01 | | | ±0.01 | ±0.1[2] | | ±0.003 | ±0.1[2] | % |
| Output Offset Voltage | | ±5 | ±30[2] | | ±2 | ±15[2] | | ±2 | ±10[2] | mV |
| Output Offset Voltage Drift | | 200 | | | 100 | | | 100 | | μV/°C |
| DYNAMICS | | | | | | | | | | |
| Small Signal BW ($V_{OUT}$ = 0.1 rms) | | 1 | | | 1 | | | 1 | | MHz |
| 1% Amplitude Error ($C_{LOAD}$ = 1000 pF) | | 50 | | | 50 | | | 50 | | kHz |
| Slew Rate ($V_{OUT}$ 20 p-p) | | 20 | | | 20 | | | 20 | | V/μs |
| Settling Time (to 1%, D $V_{OUT}$ = 20 V) | | 2 | | | 2 | | | 2 | | μs |
| NOISE | | | | | | | | | | |
| Noise Spectral Density | | | | | | | | | | |
| SF = 10 V | | 0.8 | | | 0.8 | | | 0.8 | | μV/√Hz |
| SF = 3 V[5] | | 0.4 | | | 0.4 | | | 0.4 | | μV/√Hz |
| Wideband Noise | | | | | | | | | | |
| f = 10 Hz to 5 MHz | | 1 | | | 1 | | | 1 | | mV rms |
| f = 10 Hz to 10 kHz | | 90 | | | 90 | | | 90 | | μV rms |
| OUTPUT | | | | | | | | | | |
| Output Voltage Swing | ±11[2] | | | ±11[2] | | | ±11[2] | | | V |
| Output Impedance (f ≤ 1 kHz) | | 0.1 | | | 0.1 | | | 0.1 | | Ω |
| Output Short-Circuit Current ($R_L$ = 0 Ω, $T_A = T_{MIN}$ to $T_{MAX}$) | | 30 | | | 30 | | | 30 | | mA |
| Amplifier Open-Loop Gain (f = 50 Hz) | | 70 | | | 70 | | | 70 | | dB |
| INPUT AMPLIFIERS (X, Y, and Z)[6] | | | | | | | | | | |
| Signal Voltage Range | | | | | | | | | | |
| Differential or Common Mode | | ±10 | | | ±10 | | | ±10 | | V |
| Operating Differential | | ±12 | | | ±12 | | | ±12 | | V |
| Offset Voltage (X, Y) | | ±5 | ±20[2] | | ±2 | ±10[2] | | ±2 | ±10[2] | mV |
| Offset Voltage Drift (X, Y) | | 100 | | | 50 | | | 50 | | μV/°C |
| Offset Voltage (Z) | | ±5 | ±30[2] | | ±2 | ±15[2] | | ±2 | ±10[2] | mV |
| Offset Voltage Drift (Z) | | 200 | | | 100 | | | 100 | | μV/°C |
| CMRR | 60[2] | 80 | | 702 | 90 | | 70[2] | 90 | | dB |

| Parameter | AD534J Min | AD534J Typ | AD534J Max | AD534K Min | AD534K Typ | AD534K Max | AD534L Min | AD534L Typ | AD534L Max | Unit |
|---|---|---|---|---|---|---|---|---|---|---|
| Bias Current | | 0.8 | 2.0[2] | | 0.8 | 2.0[2] | | 0.8 | 2.0[2] | μA |
| Offset Current | | 0.1 | | | 0.1 | | | 0.05 | 0.2[2] | μA |
| Differential Resistance | | 10 | | | 10 | | | 10 | | MΩ |
| DIVIDER PERFORMANCE | | | | | | | | | | |
| Transfer Function ($X_1 > X_2$) | | $10\ \text{V}\frac{(Z_2-Z_1)}{(X_1-X_2)}+Y_1$ | | | $10\ \text{V}\frac{(Z_2-Z_1)}{(X_1-X_2)}+Y_1$ | | | $10\ \text{V}\frac{(Z_2-Z_1)}{(X_1-X_2)}+Y_1$ | | |
| Total Error[1] | | | | | | | | | | |
| X = 10 V, −10 V ≤ Z ≤ +10 V | | ±0.75 | | | ±0.35 | | | ±0.2 | | % |
| X = 1 V, −1 V ≤ Z ≤ +1 V | | ±2.0 | | | ±1.0 | | | ±0.8 | | % |
| 0.1 V ≤ X ≤ 10 V, −10 V ≤ Z ≤ +10 V | | ±2.5 | | | ±1.0 | | | ±0.8 | | % |
| SQUARER PERFORMANCE | | | | | | | | | | |
| Transfer Function | | $\frac{(X_1-X_2)^2}{10\ \text{V}}+Z_2$ | | | $\frac{(X_1-X_2)^2}{10\ \text{V}}+Z_2$ | | | $\frac{(X_1-X_2)^2}{10\ \text{V}}+Z_2$ | | |
| Total Error (−10 V ≤ X ≤ +10 V) | | ±0.6 | | | ±0.3 | | | ±0.2 | | % |
| SQUARE-ROOTER PERFORMANCE | | | | | | | | | | |
| Transfer Function ($Z_1 \le Z_2$) | | $\sqrt{(10\ \text{V}(Z_2 - Z_1))} + X_2$ | | | $\sqrt{(10\ \text{V}(Z_2 - Z_1))} + X_2$ | | | $\sqrt{(10\ \text{V}(Z_2 - Z_1))} + X_2$ | | |
| Total Error[1] (1 V ≤ Z ≤ 10 V) | | ±1.0 | | | ±0.5 | | | ±0.25 | | % |
| POWER SUPPLY SPECIFICATIONS | | | | | | | | | | |
| Supply Voltage | | | | | | | | | | |
| Rated Performance | | ±15 | | | ±15 | | | ±15 | | V |
| Operating | ±8 | | ±18[2] | ±8 | | ±18[2] | ±8 | | ±18[2] | V |
| Supply Current | | | | | | | | | | |
| Quiescent | | 4 | 6[2] | | 4 | 6[2] | | 4 | 6[2] | mA |

[1] Specifications given are percent of full scale, ±10 V (that is, 0.01% = 1 mV).
[2] Tested on all production units at final electrical test. Results from those tests are used to calculate outgoing quality levels.
[3] Can be reduced down to 3 V using external resistor between $-V_S$ and SF.
[4] Irreducible component due to nonlinearity; excludes effect of offsets.
[5] Using external resistor adjusted to give SF = 3 V.
[6] See Figure 1 for definition of sections.

$T_A$ = 25°C, ±$V_S$ = ±15 V, R ≥ 2 kΩ, all minimum and maximum specifications are guaranteed, unless otherwise noted.

**Table 2.**

| Parameter | AD534S Min | AD534S Typ | AD534S Max | AD534T Min | AD534T Typ | AD534T Max | Unit |
|---|---|---|---|---|---|---|---|
| MULTIPLIER PERFORMANCE | | | | | | | |
| Transfer Function | | $\frac{(X_1-X_2)(Y_1-Y_2)}{10\ \text{V}}+Z_2$ | | | $\frac{(X_1-X_2)(Y_1-Y_2)}{10\ \text{V}}+Z_2$ | | |
| Total Error[1] (−10 V ≤ X, Y ≤ +10 V) | | | ±1.0[2] | | | ±0.5[2] | % |
| $T_A = T_{MIN}$ to $T_{MAX}$ | | | ±2.0[2] | | ±1.0 | | % |
| Total Error vs. Temperature | | | ±0.02[2] | | | ±0.01[2] | %/°C |
| Scale Factor Error | | | | | | | |
| (SF = 10.000 V Nominal)[3] | | ±0.25 | | | ±0.1 | | % |
| Temperature Coefficient of Scaling Voltage | | ±0.02 | | | ±0.01 | | %/°C |
| Supply Rejection (±15 V ± 1 V) | | ±0.01 | | | ±0.01 | | % |
| Nonlinearity, X (X = 20 V p-p, Y = 10 V) | | ±0.4 | | | ±0.2 | ±0.3[2] | % |
| Nonlinearity, Y (Y = 20 V p-p, X = 10 V | | ±0.2 | | | ±0.1 | ±0.1[2] | % |
| Feedthrough[4], X (Y Nulled, | | | | | | | |
| X = 20 V p-p, 50 Hz) | | ±0.3 | | | ±0.15 | ±0.3[2] | % |
| Feedthrough[4], Y (X Nulled, | | | | | | | |
| Y = 20 V p-p, 50 Hz) | | ±0.01 | | | ±0.01 | ±0.1[2] | % |
| Output Offset Voltage | | ±5 | ±30[2] | | ±2 | ±15[2] | mV |
| Output Offset Voltage Drift | | | 500[2] | | | 300[2] | μV/°C |
| DYNAMICS | | | | | | | |
| Small Signal BW ($V_{OUT}$ = 0.1 rms) | | 1 | | | 1 | | MHz |
| 1% Amplitude Error ($C_{LOAD}$ = 1000 pF) | | 50 | | | 50 | | kHz |
| Slew Rate ($V_{OUT}$ 20 p-p) | | 20 | | | 20 | | V/μs |
| Settling Time (to 1%, $\Delta V_{OUT}$ = 20 V) | | 2 | | | 2 | | μs |
| NOISE | | | | | | | |
| Noise Spectral Density | | | | | | | |
| SF = 10 V | | 0.8 | | | 0.8 | | μV/√Hz |
| SF = 3 V[5] | | 0.4 | | | 0.4 | | μV/√Hz |
| Wideband Noise | | | | | | | |
| f = 10 Hz to 5 MHz | | 1 | | | 1 | | mV/rms |
| f = 10 Hz to 10 kHz | | 90 | | | 90 | | μV/rms |
| OUTPUT | | | | | | | |
| Output Voltage Swing | ±11[2] | | | ±11[2] | | | V |
| Output Impedance (f ≤ 1 kHz) | | 0.1 | | | 0.1 | | Ω |
| Output Short-Circuit Current ($R_L$ = 0 Ω, $T_A = T_{MIN}$ to $T_{MAX}$) | | 30 | | | 30 | | mA |
| Amplifier Open-Loop Gain (f = 50 Hz) | | 70 | | | 70 | | dB |
| INPUT AMPLIFIERS (X, Y, and Z)[6] | | | | | | | |
| Signal Voltage Range | | | | | | | |
| Differential or Common Mode | | ±10 | | | ±10 | | V |
| Operating Differential | | ±12 | | | ±12 | | V |
| Offset Voltage (X, Y) | | ±5 | ±20[2] | | ±2 | ±10[2] | mV |
| Offset Voltage Drift (X, Y) | | 100 | | | 150 | | μV/°C |
| Offset Voltage (Z) | | ±5 | ±30[2] | | ±2 | ±15[2] | mV |
| Offset Voltage Drift (Z) | | | 500[2] | | | 300[2] | μV/°C |
| CMRR | 60[2] | 80 | | 70[2] | 90 | | dB |
| Bias Current | | 0.8 | 2.0[2] | | 0.8 | 2.0[2] | μA |
| Offset Current | | 0.1 | | | 0.1 | | μA |
| Differential Resistance | | 10 | | | 10 | | MΩ |

| Parameter | AD534S Min | AD534S Typ | AD534S Max | AD534T Min | AD534T Typ | AD534T Max | Unit |
|---|---|---|---|---|---|---|---|
| DIVIDER PERFORMANCE | | | | | | | |
| Transfer Function ($X_1 > X_2$) | | $10\text{ V}\frac{(Z_2-Z_1)}{(X_1-X_2)}+Y_1$ | | | $10\text{ V}\frac{(Z_2-Z_1)}{(X_1-X_2)}+Y_1$ | | |
| Total Error[1] | | | | | | | |
| X = 10 V, −10 V ≤ Z ≤ +10 V | | ±0.75 | | | ±0.35 | | % |
| X = 1 V, −1 V ≤ Z ≤ +1 V | | ±2.0 | | | ±1.0 | | % |
| 0.1 V ≤ X ≤ 10 V, −10 V ≤ Z ≤ +10 V | | ±2.5 | | | ±1.0 | | % |
| SQUARER PERFORMANCE | | | | | | | |
| Transfer Function | | $\frac{(X_1-X_2)^2}{10\text{ V}}+Z_2$ | | | $\frac{(X_1-X_2)^2}{10\text{ V}}+Z_2$ | | |
| Total Error (−10 V ≤ X ≤ +10 V) | | ±0.6 | | | ±0.3 | | % |
| SQUARE-ROOTER PERFORMANCE | | | | | | | |
| Transfer Function ($Z_1 \le Z_2$) | | $\sqrt{(10\text{ V}(Z_2 - Z_1))} + X_2$ | | | $\sqrt{(10\text{ V}(Z_2 - Z_1))} + X_2$ | | |
| Total Error[1] (1 V ≤ Z ≤ 10 V) | | ±1.0 | | | ±0.5 | | % |
| POWER SUPPLY SPECIFICATIONS | | | | | | | |
| Supply Voltage | | | | | | | |
| Rated Performance | | ±15 | | | ±15 | | V |
| Operating | ±8 | | ±22[2] | ±8 | | ±22[2] | V |
| Supply Current | | | | | | | |
| Quiescent | | 4 | 6[2] | | 4 | 6[2] | mA |

[1] Specifications given are percent of full scale, ±10 V (that is, 0.01% = 1 mV).
[2] Tested on all production units at final electrical test. Results from those tests are used to calculate outgoing quality levels.
[3] Can be reduced down to 3 V using external resistor between $-V_S$ and SF.
[4] Irreducible component due to nonlinearity: excludes effect of offsets.
[5] Using external resistor adjusted to give SF = 3 V.
[6] See Figure 1 for definition of sections.

# ABSOLUTE MAXIMUM RATINGS

**Table 3.**

| Parameter | AD534J, AD534K, AD534L | AD534S, AD534T |
|---|---|---|
| Supply Voltage | ±18 V | ±22 V |
| Internal Power Dissipation | 500 mW | 500 mW |
| Output Short Circuit to Ground | Indefinite | Indefinite |
| Input Voltages ($X_1$, $X_2$, $Y_1$, $Y_2$, $Z_1$, $Z_2$) | $\pm V_S$ | $\pm V_S$ |
| Rated Operating Temperature Range | 0°C to +70°C | −55°C to +125°C |
| Storage Temperature Range | −65°C to +150°C | −65°C to +150°C |
| Lead Temperature Range, 60 sec Soldering | 300°C | 300°C |

Stresses above those listed under Absolute Maximum Ratings may cause permanent damage to the device. This is a stress rating only; functional operation of the device at these or any other conditions above those indicated in the operational section of this specification is not implied. Exposure to absolute maximum rating conditions for extended periods may affect device reliability.

## THERMAL RESISTANCE

$\theta_{JA}$ is specified for the worst-case conditions, that is, a device soldered in a circuit board for surface-mount packages.

**Table 4. Thermal Resistance**

| Package Type | $\theta_{JA}$ | $\theta_{JC}$ | Unit |
|---|---|---|---|
| 10-Pin TO-100 (H-10) | 150 | 25 | °C/W |
| 14-Lead SBDIP (D-14) | 95 | 25 | °C/W |
| 20-Terminal LCC (E-20-1) | 95 | 25 | °C/W |

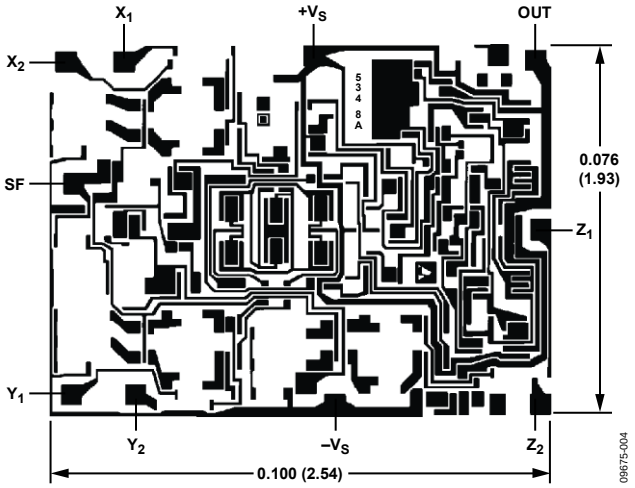


*Figure 2. Chip Dimensions and Bonding Diagram Dimensions shown in inches and (mm)*

Contact factory for latest dimensions.

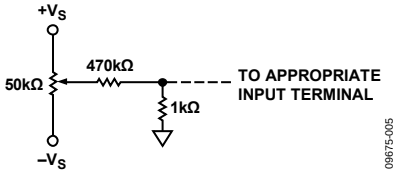


*Figure 3. Optional Trimming Configuration*

## ESD CAUTION

**ESD (electrostatic discharge) sensitive device.** Charged devices and circuit boards can discharge without detection. Although this product features patented or proprietary protection circuitry, damage may occur on devices subjected to high energy ESD. Therefore, proper ESD precautions should be taken to avoid performance degradation or loss of functionality.

# PIN CONFIGURATIONS AND FUNCTION DESCRIPTIONS

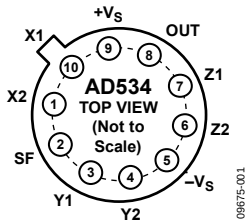


*Figure 4. TO-100 (H-10) Pin Configuration*

**Table 5. H-10 Package Pin Function Descriptions**

| Pin No. | Mnemonic | Description |
|---|---|---|
| 1 | X2 | Inverting Differential Input of the X Multiplicand Input. |
| 2 | SF | Scale Factor Input. |
| 3 | Y1 | Noninverting Differential Input of the Y Multiplicand Input. |
| 4 | Y2 | Inverting Differential Input of the Y Multiplicand Input. |
| 5 | $-V_S$ | Negative Supply Rail. |
| 6 | Z2 | Inverting Differential Input of the Z Reference Input. |
| 7 | Z1 | Noninverting Differential Input of the Z Reference Input. |
| 8 | OUT | Product Output. |
| 9 | $+V_S$ | Positive Supply Rail. |
| 10 | X1 | Noninverting Differential Input of the X Multiplicand Input. |

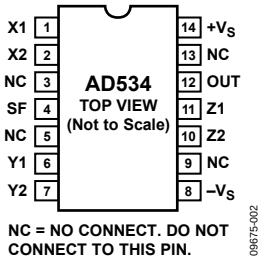


*Figure 5. TO-100 (D-14) Pin Configuration*

**Table 6. D-14 Package Pin Function Descriptions**

| Pin No. | Mnemonic | Description |
|---|---|---|
| 1 | X1 | Noninverting Differential Input of the X Multiplicand Input. |
| 2 | X2 | Inverting Differential Input of the X Multiplicand Input. |
| 3, 5, 9, 13 | NC | No Connect. Do not connect to this pin. |
| 4 | SF | Scale Factor Input. |
| 6 | Y1 | Noninverting Differential Input of the Y Multiplicand Input. |
| 7 | Y2 | Inverting Differential Input of the Y Multiplicand Input. |
| 8 | $-V_S$ | Negative Supply Rail. |
| 10 | Z2 | Inverting Differential Input of the Z Reference Input. |
| 11 | Z1 | Noninverting Differential Input of the Z Reference Input. |
| 12 | OUT | Product Output. |
| 14 | $+V_S$ | Positive Supply rail. |

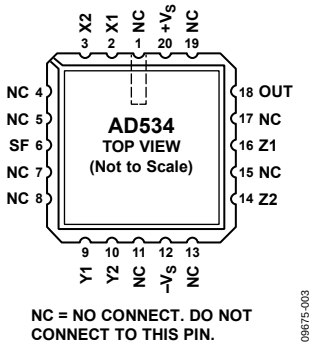


*Figure 6. LCC (E-20-1) Pin Configuration*

**Table 7. E-20-1 Package Pin Function Descriptions**

| Pin No. | Mnemonic | Description |
|---|---|---|
| 1, 4, 5, 7, 8, 11, 13, 15, 17, 19 | NC | No Connect. Do not connect to this pin. |
| 2 | X1 | Noninverting Differential Input of the X Multiplicand Input. |
| 3 | X2 | Inverting Differential Input of the X Multiplicand Input. |
| 6 | SF | Scale Factor Input. |
| 9 | Y1 | Noninverting Differential Input of the Y Multiplicand Input. |
| 10 | Y2 | Inverting Differential Input of the Y Multiplicand Input. |
| 12 | $-V_S$ | Negative Supply Rail. |
| 14 | Z2 | Inverting Differential Input of the Z Reference Input. |
| 16 | Z1 | Noninverting Differential Input of the Z Reference Input. |
| 19 | OUT | Product Output. |
| 20 | $+V_S$ | Positive Supply Rail. |

# TYPICAL PERFORMANCE CHARACTERISTICS

Typical at 25°C, with $\pm V_S = \pm 15$ V dc, unless otherwise noted.

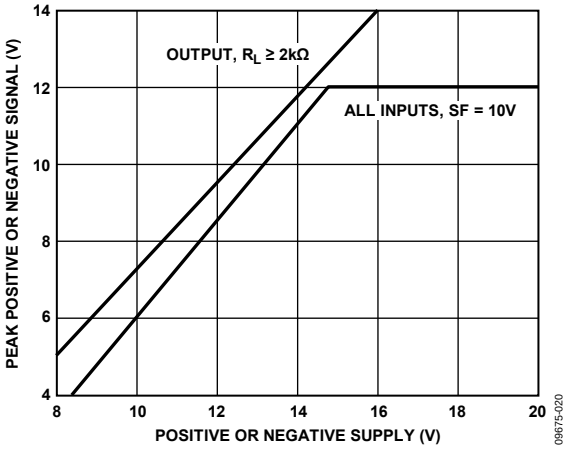


*Figure 7. Input/Output Signal Range vs. Supply Voltages*

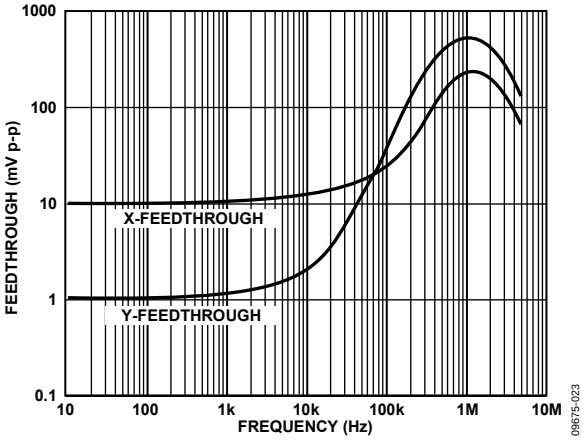


*Figure 10. AC Feedthrough vs. Frequency*

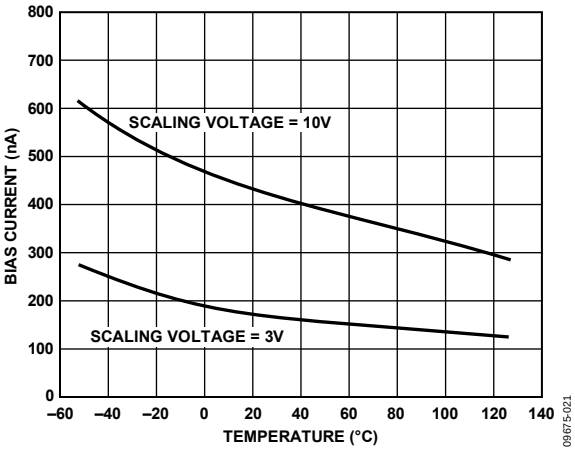


*Figure 8. Bias Current vs. Temperature (X, Y, or Z Input)*

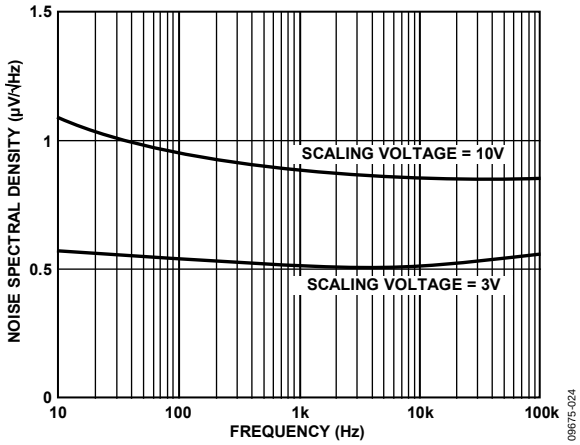


*Figure 11. Noise Spectral Density vs. Frequency*

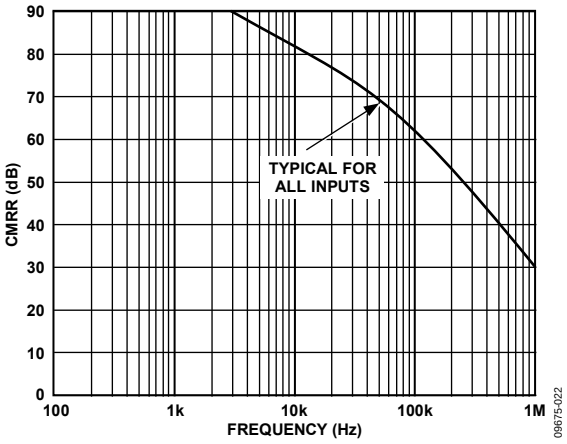


*Figure 9. Common-Mode Rejection Ratio vs. Frequency*

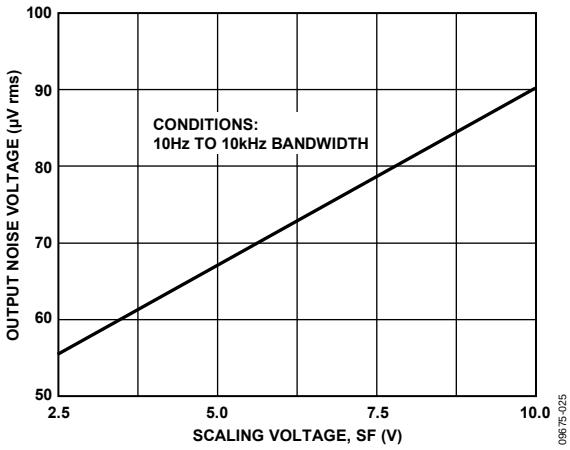


*Figure 12. Wideband Noise vs. Scaling Voltage*

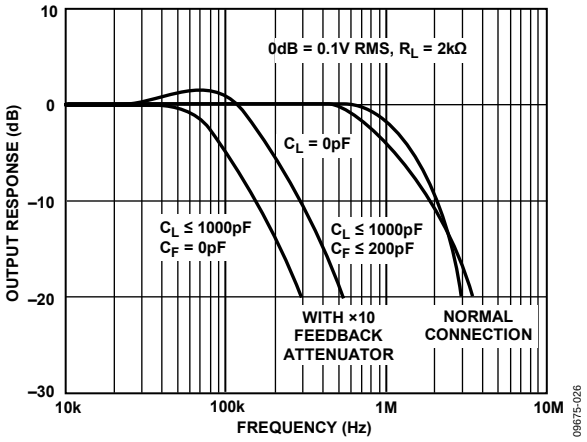


*Figure 13. Frequency Response as a Multiplier*

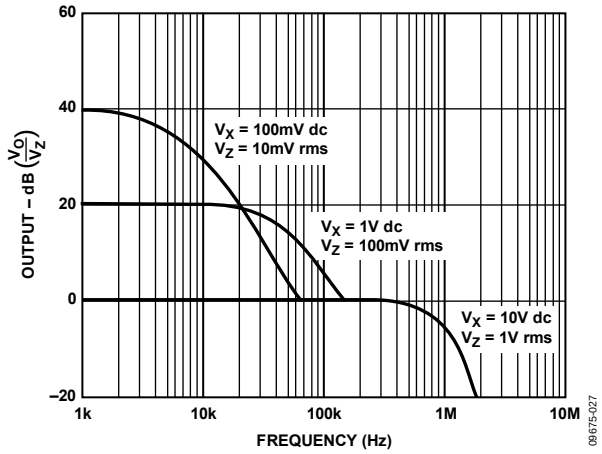


*Figure 14. Frequency Response vs. Divider Denominator Input Voltage*

# FUNCTIONAL DESCRIPTION

Figure 1 shows a functional block diagram of the AD534. Inputs are converted to differential currents by three identical voltage-to-current converters, each trimmed for zero offset. The product of the X and Y currents is generated by a multiplier cell using Gilbert's translinear technique. An on-chip buried Zener provides a highly stable reference, which is laser trimmed to provide an overall scale factor of 10 V. The difference between XY/SF and Z is then applied to the high gain output amplifier. This permits various closed-loop configurations and dramatically reduces nonlinearities due to the input amplifiers, a dominant source of distortion in earlier designs.

The effectiveness of the new scheme can be judged from the fact that, under typical conditions as a multiplier, the nonlinearity on the Y input, with X at full scale (±10 V), is ±0.005% of FS. Even at its worst point, which occurs when X = ±6.4 V, nonlinearity is typically only ±0.05% of FS. Nonlinearity for signals applied to the X input, on the other hand, is determined almost entirely by the multiplier element and is parabolic in form. This error is a major factor in determining the overall accuracy of the unit and therefore is closely related to the device grade.

The generalized transfer function for the AD534 is given by

$$V_{OUT} = A\left|\frac{(X_1 - X_2)(Y_1 - Y_2)}{SF} - (Z_1 - Z_2)\right|$$

where:
*A* is the open-loop gain of the output amplifier, typically 70 dB at dc.
$X_1$, $Y_1$, $Z_1$, $X_2$, $Y_2$, and $Z_2$ are the input voltages (full scale = ±SF, peak = ±1.25 SF).
*SF* is the scale factor, pretrimmed to 10.00 V but adjustable by the user down to 3 V.

In most cases, the open-loop gain can be regarded as infinite, and SF is 10 V. The operation performed by the AD534, can then be described in terms of the following equation:

$$(X_1 - X_2)(Y_1 - Y_2) = 10\text{ V}\,(Z_1 - Z_2)$$

The user can adjust SF for values between 10.00 V and 3 V by connecting an external resistor in series with a potentiometer between SF and $-V_S$. The approximate value of the total resistance for a given value of SF is given by the relationship:

$$R_{SF} = 5.4\text{k}\Omega\frac{SF}{10 - SF}$$

Due to device tolerances, allowance should be made to vary $R_{SF}$ by ±25% using the potentiometer. Considerable reduction in bias currents, noise, and drift can be achieved by decreasing SF. This has the overall effect of increasing signal gain without the customary increase in noise. Note that the peak input signal is always limited to 1.25 SF (that is, ±5 V for SF = 4 V) so the overall transfer function shows a maximum gain of 1.25. The performance with small input signals, however, is improved by using a lower scale factor because the dynamic range of the inputs is now fully utilized. Bandwidth is unaffected by the use of this option.

Supply voltages of ±15 V are generally assumed. However, satisfactory operation is possible down to ±8 V (see Figure 7). Because all inputs maintain a constant peak input capability of ±1.25 SF, some feedback attenuation is necessary to achieve output voltage swings in excess of ±12 V when using higher supply voltages.

## PROVIDES GAIN WITH LOW NOISE

The AD534 is the first general-purpose multiplier capable of providing gains up to ×100, frequently eliminating the need for separate instrumentation amplifiers to precondition the inputs. The AD534 can be very effectively employed as a variable gain differential input amplifier with high common-mode rejection. The gain option is available in all modes and simplifies the implementation of many function-fitting algorithms such as those used to generate sine and tangent. The utility of this feature is enhanced by the inherent low noise of the AD534: 90 μV rms (depending on the gain), a factor of 10 lower than previous monolithic multipliers. Drift and feedthrough are also substantially reduced over earlier designs.

## OPERATION AS A MULTIPLIER

Figure 15 shows the basic connection for multiplication. Note that the circuit meets all specifications without trimming.

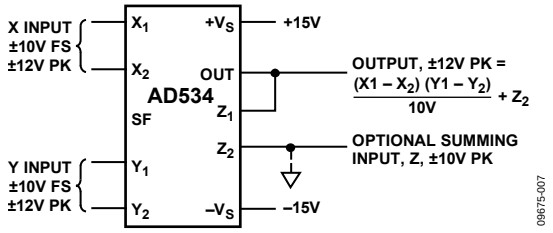


*Figure 15. Basic Multiplier Connection*

To reduce ac feedthrough to a minimum (as in a suppressed carrier modulator), apply an external trim voltage (±30 mV range required) to the X or Y input (see Figure 3). Figure 10 shows the typical ac feedthrough with this adjustment mode. Note that the Y input is a factor of 10 lower than the X input and should be used in applications where null suppression is critical.

The high impedance $Z_2$ terminal of the AD534 can be used to sum an additional signal into the output. In this mode, the output amplifier behaves as a voltage follower with a 1 MHz small signal bandwidth and a 20 V/μs slew rate. This terminal should always be referenced to the ground point of the driven system, particularly if this is remote. Likewise, the differential inputs should be referenced to their respective ground potentials to realize the full accuracy of the AD534.

A much lower scaling voltage can be achieved without any reduction of input signal range using a feedback attenuator as shown in Figure 16. In this example, the scale is such that $V_{OUT}$ =

$(X_1 - X_2)(Y_1 - Y_2)$, so that the circuit can exhibit a maximum gain of 10. This connection results in a reduction of bandwidth to about 80 kHz without the peaking capacitor $C_F$ = 200 pF. In addition, the output offset voltage is increased by a factor of 10 making external adjustments necessary in some applications. Adjustment is made by connecting a 4.7 MΩ resistor between $Z_1$ and the slider of a potentiometer connected across the supplies to provide ±300 mV of trim range at the output.

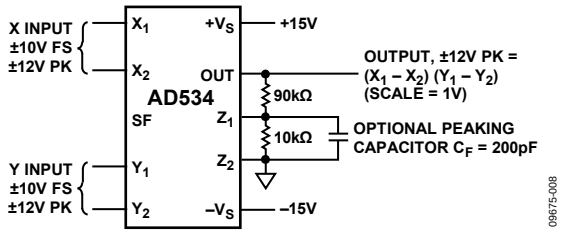


*Figure 16. Connections for Scale Factor of Unity*

Feedback attenuation also retains the capability for adding a signal to the output. Signals can be applied to the high impedance $Z_2$ terminal where they are amplified by +10 or to the common ground connection where they are amplified by +1. Input signals can also be applied to the lower end of the 10 kΩ resistor, giving a gain of −9. Other values of feedback ratio, up to ×100, can be used to combine multiplication with gain.

Occasionally, it may be desirable to convert the output to a current into a load of unspecified impedance or dc level. For example, the function of multiplication is sometimes followed by integration; if the output is in the form of a current, a simple capacitor provides the integration function. Figure 17 shows how this can be achieved. This method can also be applied in squaring, dividing, and square rooting modes by appropriate choice of terminals. This technique is used in the voltage controlled low-pass filter and the differential input voltage-to-frequency converter shown in the Applications Information section.

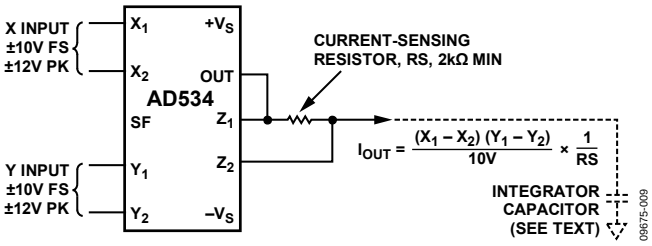


*Figure 17. Conversion of Output to Current*

## OPERATION AS A SQUARER

Operation as a squarer is achieved in the same fashion as the multiplier except that the X and Y inputs are used in parallel. The differential inputs can be used to determine the output polarity (positive for $X_1 = Y_1$ and $X_2 = Y_2$, negative if either one of the inputs is reversed). Accuracy in the squaring mode is typically a factor of 2 better than in the multiplying mode and the largest errors occurring with small values of output for input below 1 V.

If the application depends on accurate operation for inputs that are always less than ±3 V, the use of a reduced value of SF is recommended as described in the Functional Description section. Alternatively, a feedback attenuator can be used to raise the output level. This is put to use in the difference-of-squares application to compensate for the factor of 2 loss involved in generating the sum term (see Figure 20).

The difference of squares function is also used as the basis for a novel rms-to-dc converter shown in Figure 27. The averaging filter is a true integrator, and the loop seeks to zero its input. For this to occur, $(V_{IN})^2 - (V_{OUT})^2 = 0$ V (for signals whose period is well below the averaging time constant). Therefore, $V_{OUT}$ is forced to equal the rms value of $V_{IN}$. The absolute accuracy of this technique is very high; at medium frequencies and for signals near full scale, it is determined almost entirely by the ratio of the resistors in the inverting amplifier. The multiplier scaling voltage affects only open-loop gain. The data shown is typical of performance that can be achieved with an AD534K, but even using an AD534J, this technique can readily provide better than 1% accuracy over a wide frequency range, even for crest factors in excess of 10.

## OPERATION AS A DIVIDER

Figure 18 shows the connection required for division. Unlike earlier products, the AD534 provides differential operation on both numerator and denominator, allowing the ratio of two floating variables to be generated. Further flexibility results from access to a high impedance summing input to $Y_1$. As with all dividers based on the use of a multiplier in a feedback loop, the bandwidth is proportional to the denominator magnitude, as shown in Figure 14.

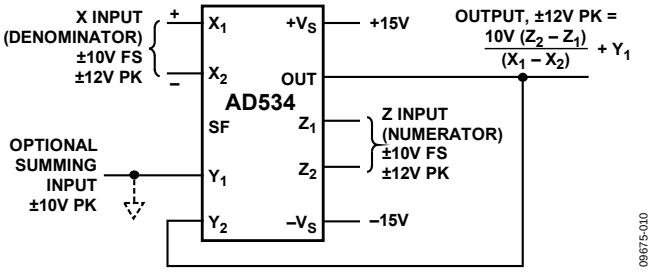


*Figure 18. Basic Divider Connection*

Without additional trimming, the accuracy of the AD534K and AD534L is sufficient to maintain a 1% error over a 10 V to 1 V denominator range. This range can be extended to 100:1 by simply reducing the X offset with an externally generated trim voltage (range required is ±3.5 mV maximum) applied to the unused X input (see Figure 3). To trim, apply a ramp of +100 mV to +V at 100 Hz to both $X_1$ and $Z_1$ (if $X_2$ is used for offset adjustment; otherwise, reverse the signal polarity) and adjust the trim voltage to minimize the variation in the output

Because the output is near 10 V, it should be ac-coupled for this adjustment. The increase in noise level and reduction in bandwidth preclude operation much beyond a ratio of 100 to 1.

As with the multiplier connection, overall gain can be introduced by inserting a simple attenuator between the output and $Y_2$ terminal. This option and the differential ratio capability of the AD534 are used in the percentage computer application shown in Figure 24. This configuration generates an output proportional to the percentage deviation of one variable (A) with respect to a reference variable (B), with a scale of 1% per volt.

## OPERATION AS A SQUARE ROOTER

The operation of the AD534 in the square root mode is shown in Figure 19. The diode prevents a latching condition, which may occur if the input momentarily changes polarity. As shown, the output is always positive; it can be changed to a negative output by reversing the diode direction and interchanging the X inputs. Because the signal input is differential, all combinations of input and output polarities can be realized, but operation is restricted to the one quadrant associated with each combination of inputs.

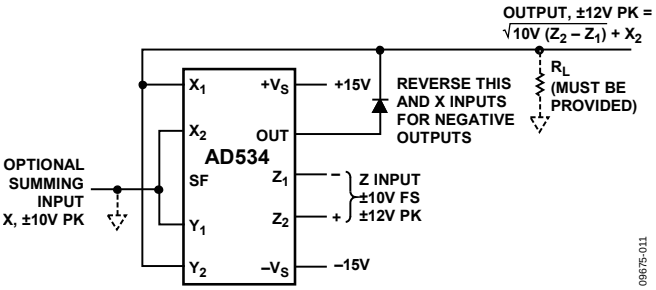


*Figure 19. Square-Rooter Connection*

In contrast to earlier devices, which were intolerant of capacitive loads in the square root modes, the AD534 is stable with all loads up to at least 1000 pF. For critical applications, a small adjustment to the Z input offset (see Figure 3) improves accuracy for inputs below 1 V.

## UNPRECEDENTED FLEXIBILITY

The precise calibration and differential Z input provide a degree of flexibility found in no other currently available multiplier. Standard multiplication, division, squaring, square-rooting (MDSSR) functions are easily implemented while the restriction to particular input/output polarities imposed by earlier designs has been eliminated. Signals can be summed into the output, with or without gain and with either a positive or negative sense. Many new modes based on implicit function synthesis have been made possible, usually requiring only external passive components. The output can be in the form of a current, if desired, facilitating such operations as integration.

# APPLICATIONS INFORMATION

The versatility of the AD534 allows the creative designer to implement a variety of circuits such as wattmeters, frequency doublers, and automatic gain controls.

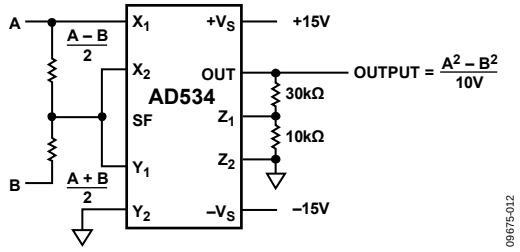


*Figure 20. Difference of Squares*

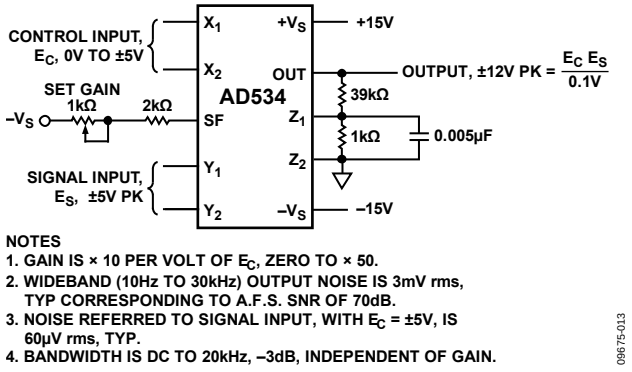


*Figure 21. Voltage-Controlled Amplifier*

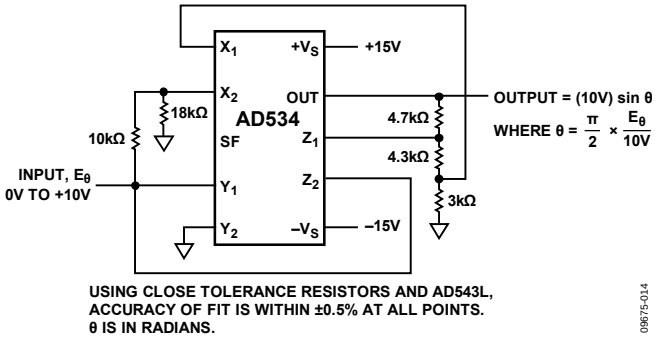


*Figure 22. Sine Function Generator*

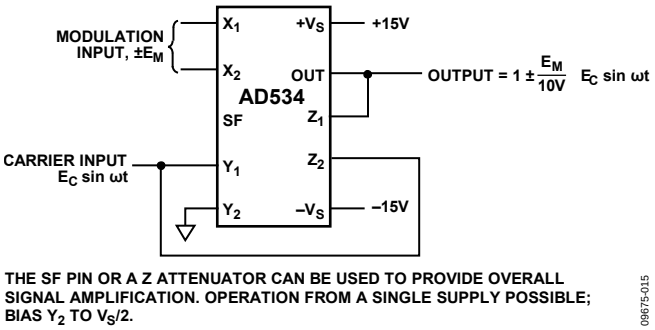


*Figure 23. Linear AM Modulator*

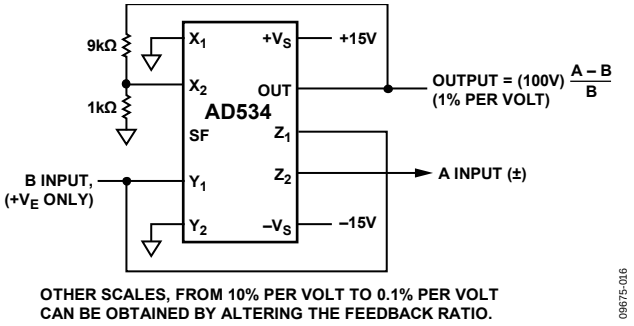


*Figure 24. Percentage Computer*

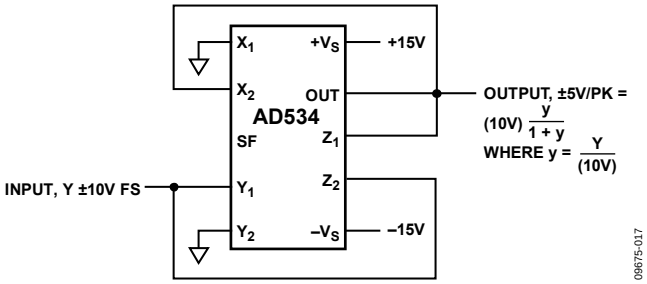


*Figure 25. Bridge Linearization Function*

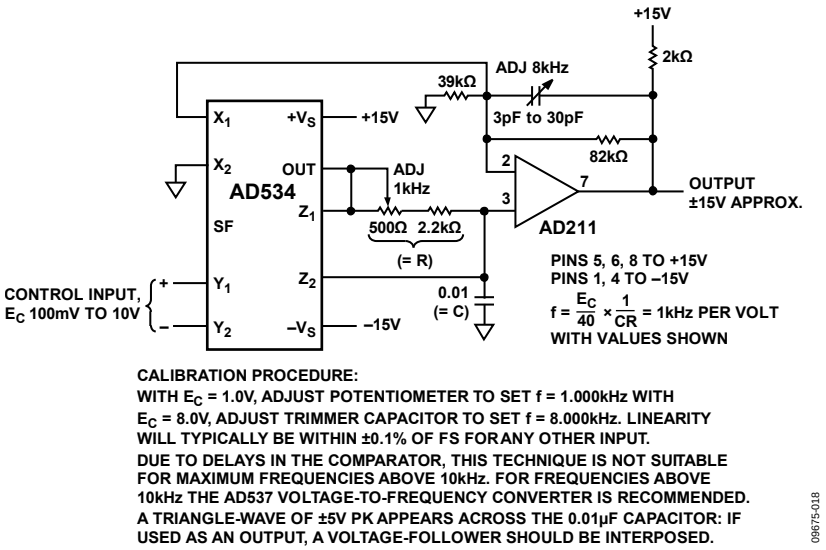


CALIBRATION PROCEDURE:
WITH $E_C$ = 1.0V, ADJUST POTENTIOMETER TO SET f = 1.000kHz WITH $E_C$ = 8.0V, ADJUST TRIMMER CAPACITOR TO SET f = 8.000kHz. LINEARITY WILL TYPICALLY BE WITHIN ±0.1% OF FS FOR ANY OTHER INPUT.
DUE TO DELAYS IN THE COMPARATOR, THIS TECHNIQUE IS NOT SUITABLE FOR MAXIMUM FREQUENCIES ABOVE 10kHz. FOR FREQUENCIES ABOVE 10kHz THE AD537 VOLTAGE-TO-FREQUENCY CONVERTER IS RECOMMENDED.
A TRIANGLE-WAVE OF ±5V PK APPEARS ACROSS THE 0.01µF CAPACITOR: IF USED AS AN OUTPUT, A VOLTAGE-FOLLOWER SHOULD BE INTERPOSED.

09675-018

*Figure 26. Differential Input Voltage-to-Frequency Converter*

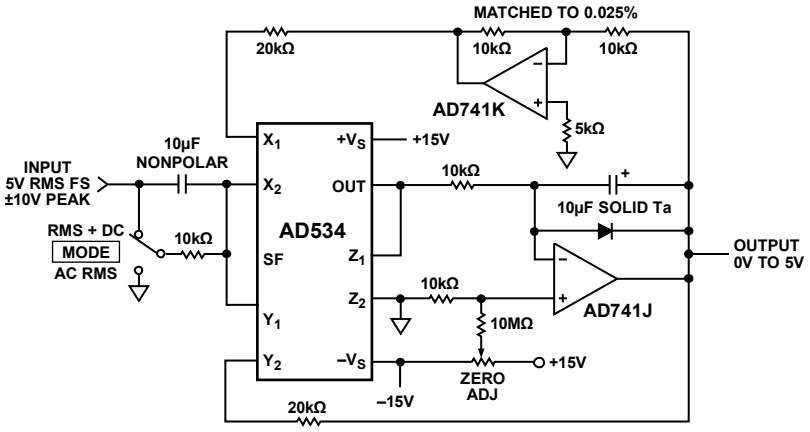


CALIBRATION PROCEDURE:
WITH MODE SWITCH IN 'RMS + DC' POSITION, APPLY AN INPUT OF +1.00V DC. ADJUST ZERO UNTIL OUTPUT READS SAME AS INPUT. CHECK FOR INPUTS OF ±10V; OUTPUT SHOULD BE WITHIN ±0.05% (5mV).
ACCURACY IS MAINTAINED FROM 60Hz TO 100kHz, AND IS TYPICALLY HIGH BY 0.5% AT 1MHz FOR $V_{IN}$ = 4V RMS (SINE, SQUARE, OR TRIANGLULAR-WAVE). PROVIDED THAT THE PEAK INPUT IS NOT EXCEEDED, CREST FACTORS UP TO AT LEAST 10 HAVE NO APPRECIABLE EFFECT ON ACCURACY.
INPUT IMPEDANCE IS ABOUT 10kΩ; FOR HIGH (10MΩ) IMPEDANCE, REMOVE MODE SWITCH AND INPUT COUPLING COMPONENTS.
FOR GUARANTEED SPECIFICATIONS THE AD536A AND AD636 ARE OFFERED AS A SINGLE PACKAGE RMS-TO-DC CONVERTER.

09675-019

*Figure 27. Wideband, High-Crest Factor, RMS-to-DC Converter*

# OUTLINE DIMENSIONS

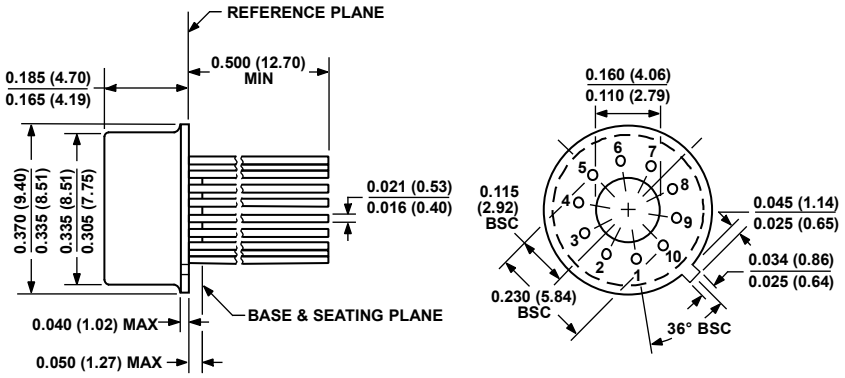


DIMENSIONS PER JEDEC STANDARDS MO-006-AF
CONTROLLING DIMENSIONS ARE IN INCHES; MILLIMETER DIMENSIONS (IN PARENTHESES) ARE ROUNDED-OFF INCH EQUIVALENTS FOR REFERENCE ONLY AND ARE NOT APPROPRIATE FOR USE IN DESIGN.

022306-A

*Figure 28. 10-Pin Metal Header Package [TO-100] (H-10)*
*Dimensions shown in inches and (millimeters)*

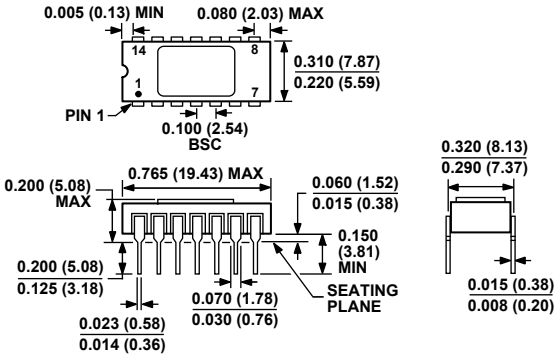


CONTROLLING DIMENSIONS ARE IN INCHES; MILLIMETER DIMENSIONS (IN PARENTHESES) ARE ROUNDED-OFF INCH EQUIVALENTS FOR REFERENCE ONLY AND ARE NOT APPROPRIATE FOR USE IN DESIGN.

*Figure 29. 14-Lead Side-Brazed Ceramic Dual In-Line Package [SBDIP] (D-14)*
*Dimensions shown in inches and (millimeters)*

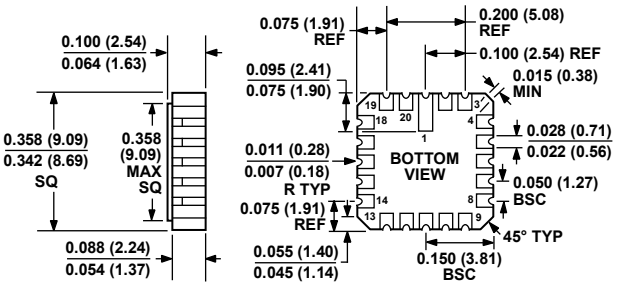


CONTROLLING DIMENSIONS ARE IN INCHES; MILLIMETER DIMENSIONS (IN PARENTHESES) ARE ROUNDED-OFF INCH EQUIVALENTS FOR REFERENCE ONLY AND ARE NOT APPROPRIATE FOR USE IN DESIGN.

022106-A

*Figure 30. 20-Terminal Ceramic Leadless Chip Carrier [LCC] (E-20-1)*
*Dimensions shown in inches and (millimeters)*

## ORDERING GUIDE

| Model[1] | Temperature Range | Package Description | Package Option |
|---|---|---|---|
| AD534JD | 0°C to +70°C | 14-Lead Side Brazed Ceramic Dual In-Line Package [SBDIP] | D-14 |
| AD534JDZ | 0°C to +70°C | 14-Lead Side Brazed Ceramic Dual In-Line Package [SBDIP] | D-14 |
| AD534KD | 0°C to +70°C | 14-Lead Side Brazed Ceramic Dual In-Line Package [SBDIP] | D-14 |
| AD534KDZ | 0°C to +70°C | 14-Lead Side Brazed Ceramic Dual In-Line Package [SBDIP] | D-14 |
| AD534LD | 0°C to +70°C | 14-Lead Side Brazed Ceramic Dual In-Line Package [SBDIP] | D-14 |
| AD534LDZ | 0°C to +70°C | 14-Lead Side Brazed Ceramic Dual In-Line Package [SBDIP] | D-14 |
| AD534JH | 0°C to +70°C | 10-Pin Metal Header Package [TO-100] | H-10 |
| AD534JHZ | 0° C to +70°C | 10-Pin Metal Header Package [TO-100] | H-10 |
| AD534KH | 0°C to +70°C | 10-Pin Metal Header Package [TO-100] | H-10 |
| AD534KHZ | 0°C to +70°C | 10-Pin Metal Header Package [TO-100] | H-10 |
| AD534LH | 0°C to +70°C | 10-Pin Metal Header Package [TO-100] | H-10 |
| AD534LHZ | 0°C to +70°C | 10-Pin Metal Header Package [TO-100] | H-10 |
| AD534K Chips | 0°C to +70°C | Chip | |
| AD534SD | −55°C to +125°C | 14-Lead Side Brazed Ceramic Dual In-Line Package [SBDIP] | D-14 |
| AD534SD/883B | −55°C to +125°C | 14-Lead Side Brazed Ceramic Dual In-Line Package [SBDIP] | D-14 |
| AD534TD | −55°C to +125°C | 14-Lead Side Brazed Ceramic Dual In-Line Package [SBDIP] | D-14 |
| AD534TD/883B | −55°C to +125°C | 14-Lead Side Brazed Ceramic Dual In-Line Package [SBDIP] | D-14 |
| AD534SE/883B | −55°C to +125°C | 20-Terminal Ceramic Leadless Chip Carrier [LCC] | E-20-1 |
| AD534TE/883B | −55°C to +125°C | 20-Terminal Ceramic Leadless Chip Carrier [LCC] | E-20-1 |
| AD534SH | −55°C to +125°C | 10-Pin Metal Header Package [TO-100] | H-10 |
| AD534SH/883B | −55°C to +125°C | 10-Pin Metal Header Package [TO-100] | H-10 |
| AD534TH | −55°C to +125°C | 10-Pin Metal Header Package [TO-100] | H-10 |
| AD534TH/883B | −55°C to +125°C | 10-Pin Metal Header Package [TO-100] | H-10 |
| AD534S Chips | −55°C to +125°C | Chip | |
| AD534T Chips | −55°C to +125°C | Chip | |

[1] Z = RoHS Compliant Part.

# NOTES

# NOTES

©1977–2011 Analog Devices, Inc. All rights reserved. Trademarks and registered trademarks are the property of their respective owners.
D09675-0-4/11(C)

НИОКР СИСТЕМС

**ООО «НИОКРсистемс» -** это оперативные поставки широкого спектра электронных компонентов отечественного и импортного производства напрямую от производителей и с крупнейших мировых складов. Реализуемая нашей компанией продукция насчитывает более полумиллиона наименований.

Благодаря этому наша компания предлагает к поставке практически не ограниченный ассортимент компонентов как оптовыми, мелкооптовыми партиями, так и в розницу.

Благодаря развитой сети поставщиков, помогаем в поиске и приобретении экзотичных или снятых с производства компонентов.

## Наша компания это:

- Гарантия качества поставляемой продукции
- Широкий ассортимент
- Минимальные сроки поставок
- Техническая поддержка
- Подбор комплектации
- Индивидуальный подход
- Гибкое ценообразование
- Работаем по 275 ФЗ

ООО «НИОКР СИТЕМС»
Москва, 125362, Россия, ул. Вишневая, д. 9, к. 1, Блок 104 а и 104 в

Телефон: 8 (495) 268-14-82
Email: n@nsistems.ru

ИНН: 7735154786
ОГРН: 1167746717709