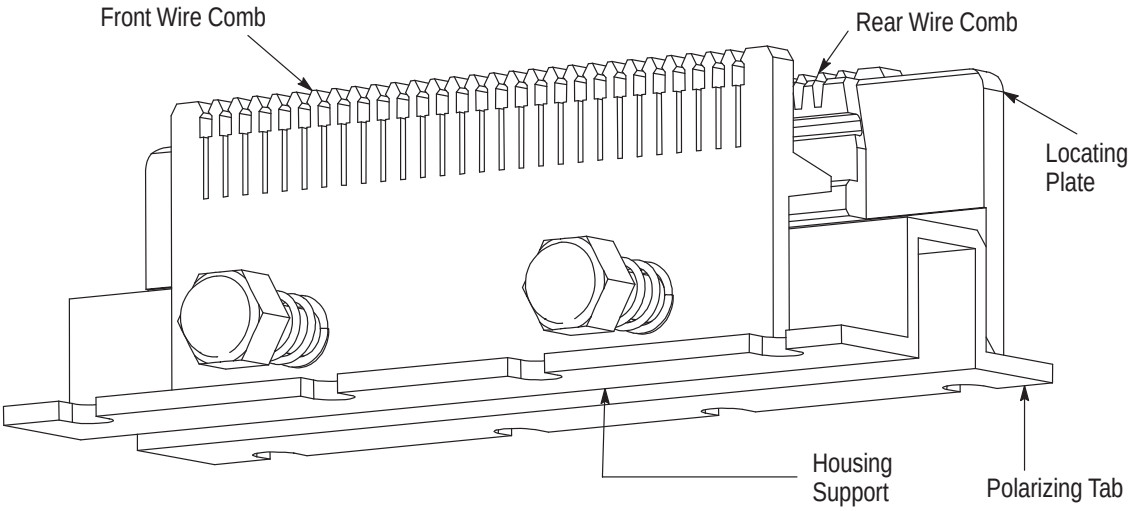

.156 MTA CONNECTOR	CONNECTOR–HOLDING FIXTURE		MTA APPLICATOR ASSEMBLY	MTA TOOLING ASSEMBLY
	Feed–Through	Closed End		
Card Edge	59849–1	59848–1	59843–1▪	58040–1□ (408–6701)
	59849–3	59848–3	58576–1 (408–4260)	
Posted	58010–1	58009–1	59843–1▪	
	58010–2	58009–2	58576–1 (408–4260)	
With Locking Ramp and Without Polarization Tabs	59847–1	59846–1	59843–1▪	
	59847–3	58244–3	58576–1 (408–4260)	
With Locking Ramp and With Polarization Tabs	58245–1	58244–1	59843–1▪	
Without Locking Ramp and With or Without Polarization Tabs				
For Testing (All Types)	58245–2	58244–2	59843–1▪	—
	58245–3	58244–3	58576–1 (408–4260)	

□The tooling assembly must be used with Manual Arbor Frame Assembly 58024–1 (408–6923).
▪This applicator assembly must be used with Pneudraulic Tool 59809–2. The applicator assembly and pneudraulic tool are no longer available for new applications, however the fixtures can be used with existing applications.

Figure 1

1. INTRODUCTION

Mass Termination Assembly (MTA) .156 Connector–Holding Fixtures listed in Figure 1 are designed to hold .156 MTA connectors and discrete wires in position for termination. The fixture is used with the MTA applicator assembly or tooling assembly (also listed in Figure 1). The fixtures are designed for feed–through (wires are not cut) or closed end (wires are cut) applications. The connectors are available with up to 26 contact positions on 3.96 [.156] centerline spacing.

NOTE *Dimensions in this instruction sheet are in millimeters [with inches in brackets]. Figures are for reference only and are not drawn to scale.*

For information on operating the applicator or tooling assembly, refer to the instruction sheet (indicated in parenthesis in Figure 1) packaged with the tooling. Read these instructions and referenced material thoroughly before using the fixture.

Reasons for reissue of this instruction sheet are provided in Section 7, REVISION SUMMARY.

©2003 Tyco Electronics Corporation, Harrisburg, PA
All International Rights Reserved
AMP and Tyco are trademarks. *Trademark
Other products, logos, and company names used are the property of their respective owners.

2. DESCRIPTION

Each fixture consists of a one–piece locating plate, housing support, front wire comb, and rear wire comb. The polarizing tab is used to properly orient the applicator or tooling assembly with the fixture.

3. SETUP

Select the connector according to the color code that matches the wire size as shown in Figure 2.

WIRE SIZE (AWG)	CONNECTOR COLOR CODE
26	Blue
24	Natural
22	Red
20	Yellow
18	Orange

Figure 2

Then select the connector size according to the required number of contact positions. Refer to Figure 1 to make sure that the fixture is compatible with the connector and method of application. Proceed as follows:

1. Prepare the cable according to 408–9515. If using the tooling assembly (58040–1), proceed to Section 4, otherwise continue with the following steps.

2. Determine the location on the harness board for the fixture. Make sure space is provided for lengths of wire between connectors. Refer to Figure 3.

NOTE *The applicator assembly can be rotated 360°, however, to avoid unnecessary motion, the fixture should be positioned so that the least amount of rotation of the applicator assembly is required.*

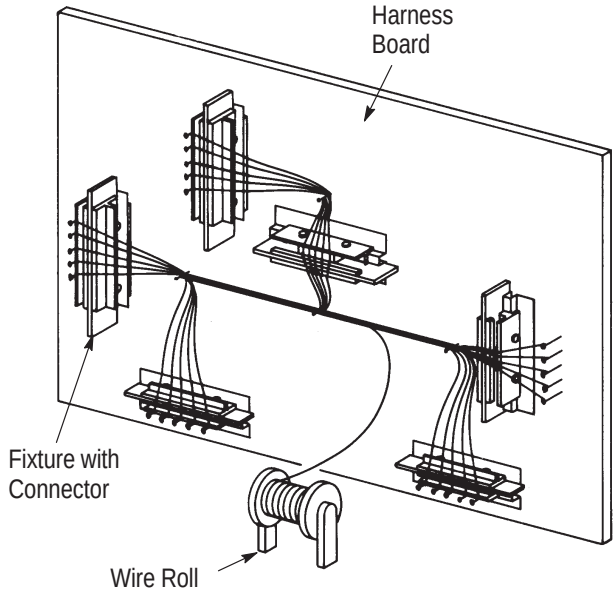

Figure 3

3. Drill holes in the board for mounting the fixture. Refer to Figure 4 for recommended board layout. If using connector assembly for testing, cut a slot for the post retainer assembly.

4. Attach the fixture to the board using screws, washers, and nuts, or suitable commercially available hardware.

5. Place wire roll at a convenient location for lacing into the fixture.

4. TERMINATION PROCEDURE

Refer to Figure 5, and proceed as follows:

1. Spread the fixture wire combs apart, and insert the connector, mating end first, into the center of the receiving track. Make sure that the connector shoulder is behind the locating plate and the connector ribs are aligned with the slots in the wire comb.

CAUTION *The connector must be located in the center of the receiving track. Do NOT place more than two connectors end to end in the fixture.*

2. Lace a wire over the slot in the wire combs that aligns with the applicable connector contact. Make sure that the wire is straight, then press the wire into the slot until it bottoms in the wire combs. Repeat this step until all wires are positioned.

3. Terminate the connector according to 408–4260 (if using applicator assembly) or 408–6701 (if using tooling assembly).

4. Spread the fixture wire combs apart, and lift the connector out of the fixture.

5. INSPECTING TERMINATED CONNECTOR

1. Visually inspect the connector to make sure that there is no damage to the housing or contacts. Damaged products should not be used.

NOTE *For detailed inspection requirements, refer to Application Specification 114–1019.*

2. If applicable, test the connector for continuity using the post retainer assembly.

NOTE *The post retainer assembly is only included with some fixtures. Post Retainer Assembly 310672–1 is available as an accessory for Fixtures 58009–1, 58009–2, 58010–1, 58010–2, 59846–1, 59847–1, 59847–3, 59848–1, 59848–3, 59849–1, and 59849–3 but cannot be used if the fixture is used with the tooling assembly (58040–1).*

Recommended Harness Board Layout

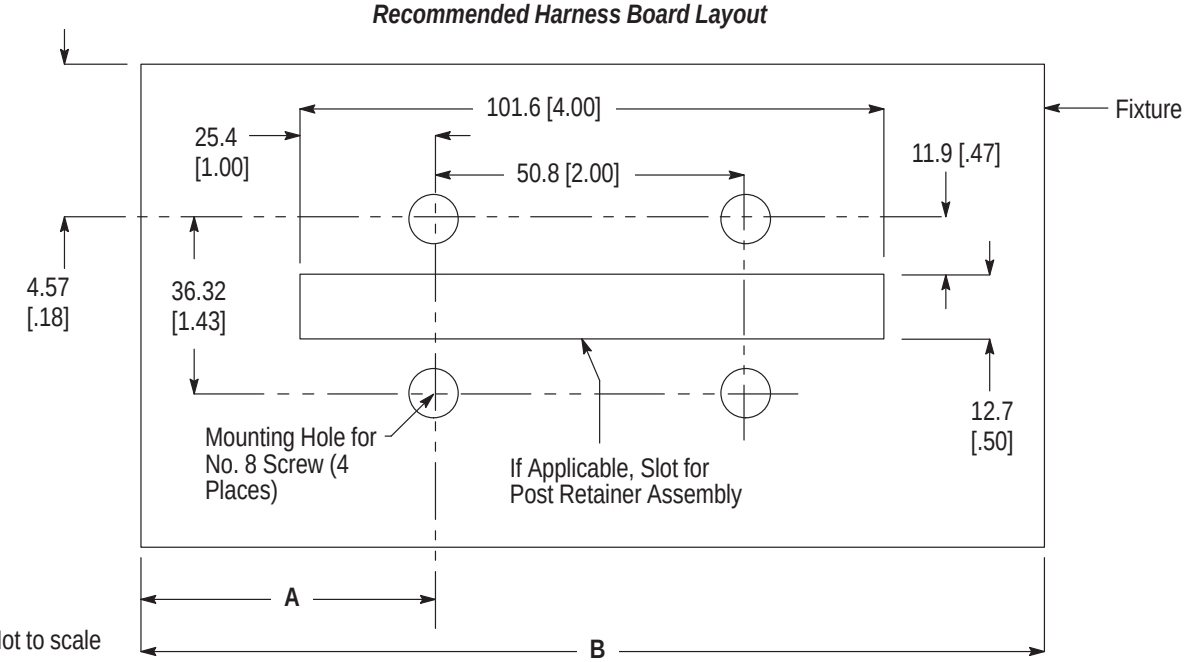

Note: Not to scale

FIXTURE	DIMENSION	
	"A"	"B"
58009–2, 58010–2, 58244–3, 58245–3, 59847–3, 59848–3, 59849–3	40.6 [1.60]	131.8 [5.19]
58244–1, 58244–2, 58245–1, 58245–2, 58009–1, 58010–1, 59849–1, 59846–1, 59847–1, 59848–1	31.8 [1.25]	114.3 [4.50]

Figure 4

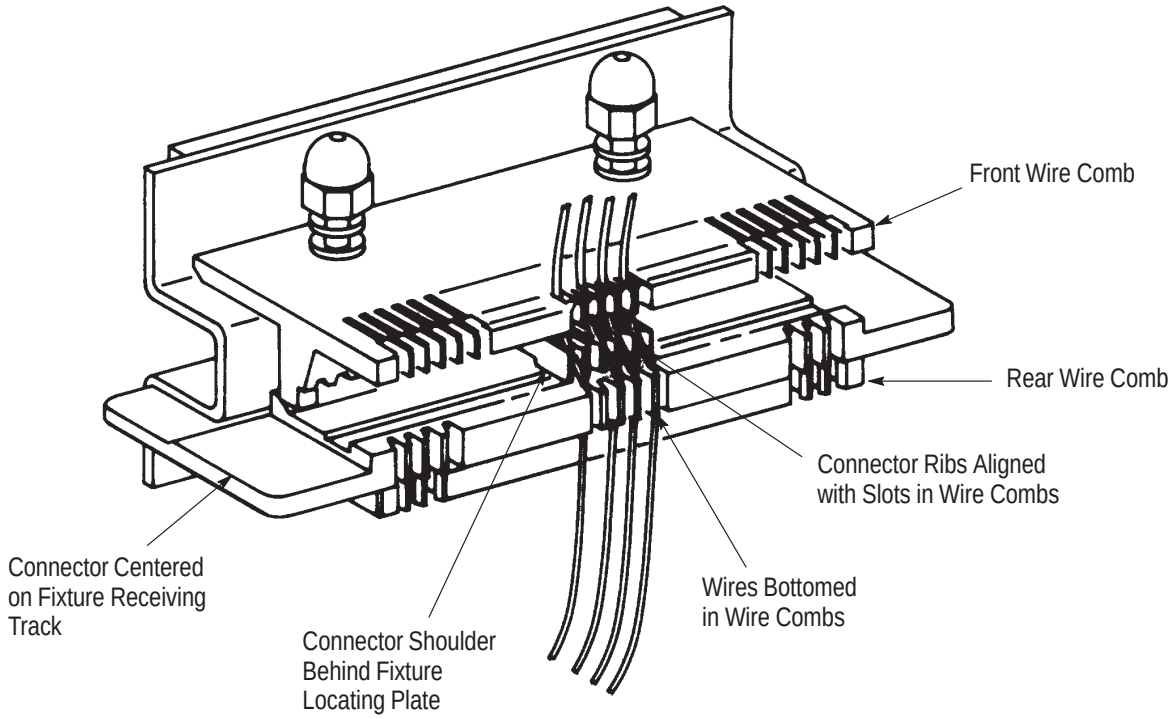

Figure 5

6. REPLACEMENT AND REPAIR

Customer–replaceable parts are listed in Figure 6. A complete inventory should be stocked and controlled to prevent lost time when replacement of parts is necessary. Parts other than those listed should be replaced by Tyco Electronics to ensure quality and reliability. Order replacement parts through your representative, or call 1–800–526–5142, or send a facsimile of your purchase order to 717–986–7605, or write to:

CUSTOMER SERVICE (038–035)
TYCO ELECTRONICS CORPORATION
PO BOX 3608
HARRISBURG PA 17105–3608

For customer repair service, please contact a Tyco Electronics Representative at 1–800–526–5136.

7. REVISION SUMMARY

Revisions to this instruction sheet per EC 0990–1125–03 include:

- Updated document to corporate requirements
- Added new part number in Figure 1
- Made table on page 2 a Figure and renumbered

Detail A — Replacement Parts

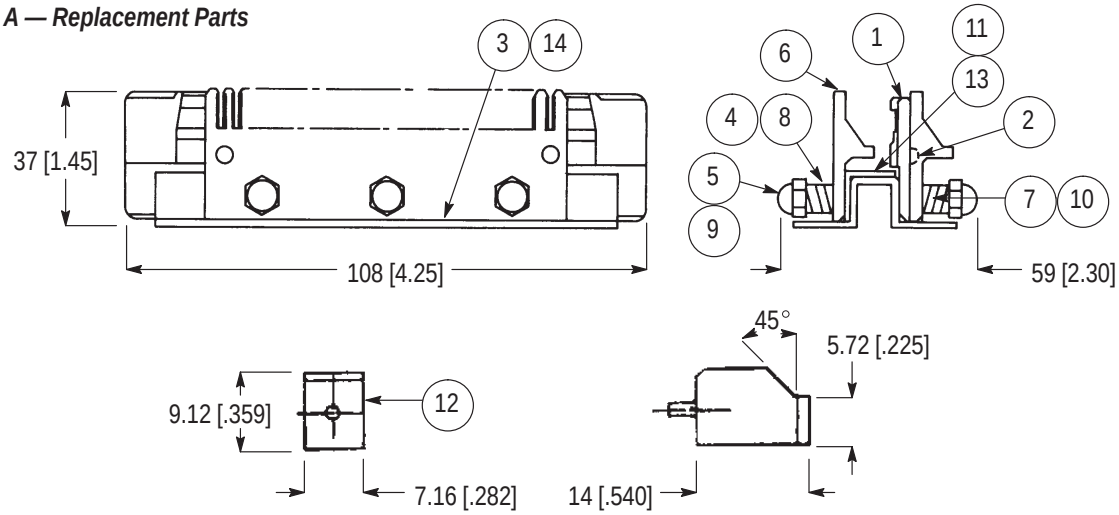

ITEM	PART NUMBER FOR CONNECTOR–HOLDING FIXTURE					DESCRIPTION	QTY PER FIXTURE
	58009–1	58009–2	58010–1	58010–2	59846–1		
1	311304–1	311304–1	311308–1	311308–1	310828–1	BLADE, Locating	1
2	21017–1	21017–1	—	—	21017–1	SCREW, Drive	2
3	311306–1	311306–2	311306–1	311306–2	310668–1	SUPPORT, Housing	1
4	—	—	—	310667–2	—	SCREW, Special, .750 Lg	3
5	—	—	—	—	17613–1	NUT, Acorn	6
6	311302–1	311302–1	311302–1	311302–1	—	COMB and LOCATOR	2
7	—	—	—	—	310667–1	SCREW, Special	6
8	2–22281–0					SPRING	6
9	1–22353–0	1–22353–0	1–22353–0	1–22353–0	—	SCREW, 8–32 × .375	3
10	1–22353–1	1–22353–1	1–22353–1	1–22353–1	—	SCREW, 8–32 × .50	3
11	311303–1	311303–1	311303–1	311303–1	—	BLOCK, Mounting	1
12	311307–1	311307–1	311307–1	311307–1	—	END STOP	2

ITEM	PART NUMBER FOR CONNECTOR–HOLDING FIXTURE						DESCRIPTION	QTY PER FIXTURE
	59847–1	59847–3	59848–1	59848–3	59849–1	59849–3		
13	—	—	310841–1	310841–1	310841–1	310841–1	INSERT, Molded	1
14		318579–1	—	318579–1	—	318579–1	BASE	1
1	310830–1	310830–1	310839–1	310839–1	310840–1	310840–1	BLADE, Locating	1
2	—	—	21017–1	21017–1	—	—	SCREW, Drive	2
3	310668–1	—	310668–1	—	310668–1	—	SUPPORT, Housing	1
4	310667–2	310667–2	—	—	—	—	SCREW, Special, .750 Lg	3
5	17613–1						NUT, Acorn	6
6	312326–1						COMB and LOCATOR	2
7	310667–1						SCREW, Special, .875 Lg	6
8	2–22281–0						SPRING	6

Figure 6 (Cont'd)

Detail B — Replacement Parts

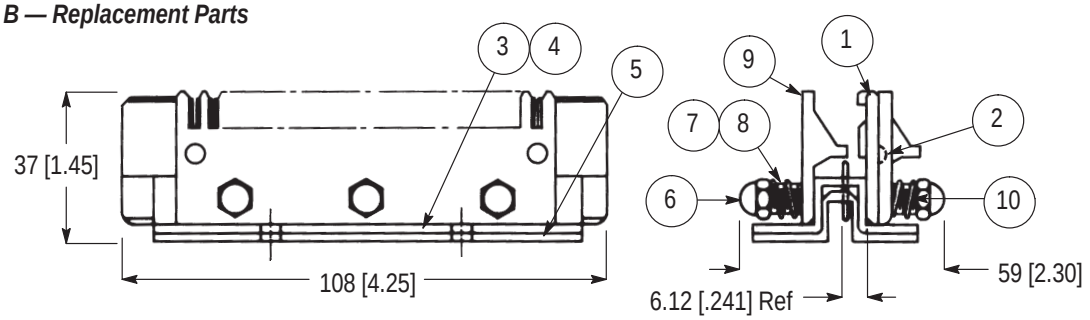

ITEM	PART NUMBER FOR CONNECTOR–HOLDING FIXTURE						DESCRIPTION	QTY PER FIXTURE
	58244–1	**58244–2**	**58244–3**	**58245–1**	**58245–2**	**58245–3**		
1	313226–1	313226–1	313226–1	313227–1	313227–1	313227–1	BLADE, Cutoff	1
2	21017–1	21017–1	21017–1	—	—	—	SCREW, Right–Hand Drive	2
3	310668–1	310668–1	—	310668–1	310668–1	—	SUPPORT, Housing	1
4	—	—	318579–1	—	—	318579–1	BASE	1
5	310666–2	310666–1	310666–1	310666–2	310666–1	310666–1	POST RETAINER	1
6	17613–1						NUT, Acorn	6
7	2–22281–0						SPRING	6
8	310667–2						SCREW, Special, .750 Lg	3
9	310326–1						COMB and LOCATOR	2
10	310667–1						SCREW, Special, .875 Lg	3

Figure 6 (End)

НИОКР СИСТЕМС

ООО «НИОКРсистемс» - это оперативные поставки широкого спектра электронных компонентов отечественного и импортного производства напрямую от производителей и с крупнейших мировых складов. Реализуемая нашей компанией продукция насчитывает более полумиллиона наименований.

Благодаря этому наша компания предлагает к поставке практически не ограниченный ассортимент компонентов как оптовыми, мелкооптовыми партиями, так и в розницу.

Благодаря развитой сети поставщиков, помогаем в поиске и приобретении экзотичных или снятых с производства компонентов.

Наша компания это:

- Гарантия качества поставляемой продукции
- Широкий ассортимент
- Минимальные сроки поставок
- Техническая поддержка
- Подбор комплектации
- Индивидуальный подход
- Гибкое ценообразование
- Работаем по 275 ФЗ

ООО «НИОКР СИТЕМС»
Москва, 125362, Россия, ул. Вишневая, д. 9, к. 1, Блок 104 а и 104 в

Телефон: 8 (495) 268-14-82
Email: n@nsistems.ru

ИНН: 7735154786
ОГРН: 1167746717709