ComLink™ Series
CY2DP818

1:8 Clock Fanout Buffer

Features

- **Low-voltage operation V_{DD} = 3.3V**
- **1:8 fanout**
- **Single-input-configurable for LVDS, LVPECL, or LVTTL**
- **8 pair of LVPECL outputs**
- **Drives a 50-ohm load**
- **Low input capacitance**
- **Low output skew**
- **Low propagation delay Typical *(tpd < 4 ns)***
- **Industrial versions available**
- **Package available include: TSSOP**
- **Does not exceed Bellcore 802.3 standards**
- **Operation at ⇒ 350 MHz–700 Mbps**

Description

This Cypress series of network circuits are produced using advanced 0.35-micron CMOS technology, achieving the industry's fastest logic.

The Cypress CY2DP818 fanout buffer features a single LVDS or a single-ended LVTTL-compatible input and eight LVPECL output pairs.

Designed for data-communications clock-management applications, the large fanout from a single input reduces loading on the input clock.

The CY2DP818 is ideal for both level translations from single-ended to LVPECL and/or for the distribution of LVPECL-based clock signals.

The Cypress CY2DP818 has configurable input functions. The input is user configurable via the Inconfig pin for single ended or differential input.

Block Diagram

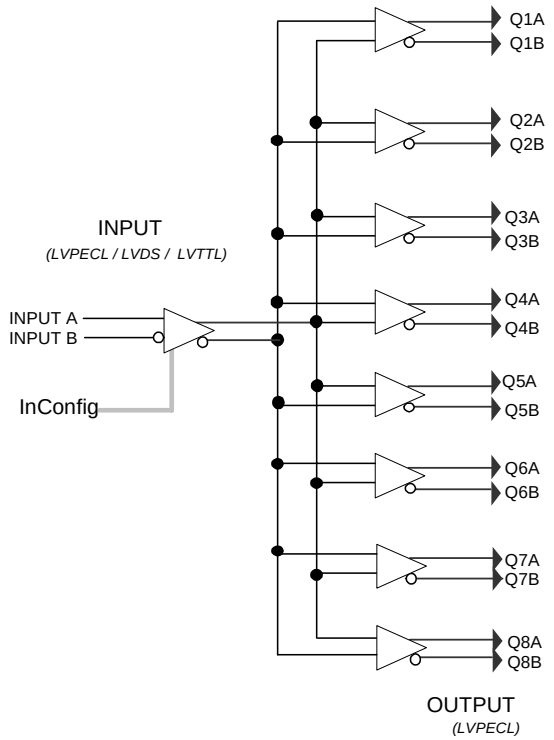

Pin Configuration

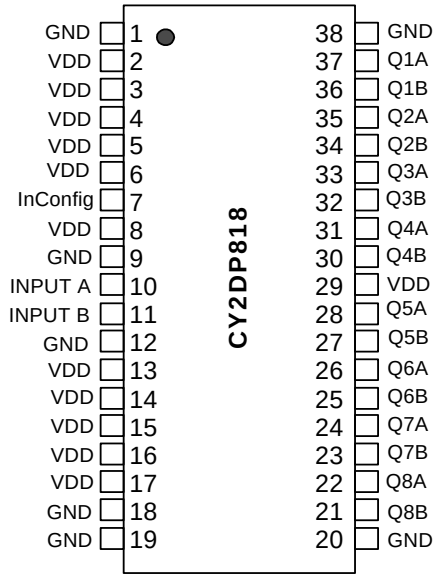

38-pin TSSOP

Pin Description

Pin Number	Pin Name	Pin Standard Interface	Description
1, 9,12,18,19,20,38	GND	POWER	Ground
2,3,4,5,6,8, 13,14,15,16,17,29	VDD	POWER	Power Supply
10,11	Input A, Input B	Default: LVPECL/LDVS Optional: LVTTL/LVCMOS single pin	Differential input pair or single line. LVPECL/LVDS default. See InConfig, below.
37, 36,35,34, 33,32,31, 30, 28,27,26,25, 24,23,22,21	Q1(A,B), Q2(A,B) Q3(A,B), Q4(A,B) Q5(A,B), Q6(A,B) Q7(A,B), Q8(A,B)	LVPECL	Differential Outputs
7	InConfig	LVTTL/LVCMOS	Converts inputs from the default LVPECL/LVDS (logic = 0) To LVTTL/LVCMOS (logic = 1) See *Figure 4* and *Figure 5* for additional Information

Maximum Ratings[1]

Storage Temperature: .....–65°C to + 150°C

Ambient Temperature:.....–40°C to +85°C

Supply Voltage to Ground Potential

(Inputs and V_{CC} only)..... –0.3V to 4.6V

Supply Voltage to Ground Potential

(Outputs only).....–0.3V to V_{DD} + 0.3V

DC Input Voltage .....–0.3V to V_{DD} + 0.3V

DC Output Voltage.....–0.3V to V_{DD} + 0.9V

Power Dissipation..... 0.75W

Table 1. Power Supply Characteristics

Parameter	Description	Test Conditions	Min.	Typ.	Max.	Unit
ICCD	Dynamic Power Supply Current	V_{DD} = Max. Input toggling 50% Duty Cycle, Outputs Open		1.5	2.0	mA/MHz
IC	Total Power Supply Current	V_{DD} = Max. Input toggling 50% Duty Cycle, Outputs 50 ohms fL=100 MHz			350	mA
IC Core	Core current when output loads are disabled	V_{DD} = Max. Input toggling 50% Duty Cycle, Outputs Disabled, not connected to VTT fL=100 MHz			50	mA

Table 2. Input Receiver Configuration for Differential or LVTTL/LVCMOS

INCONFIG Pin 7 Binary Value	Input Receiver Family	Input Receiver Type
1	LVTTL in LVCMOS	Single-ended, non-inverting, inverting, void of bias resistors
0	LVDS	Low-voltage differential signaling
	LVPECL	Low-voltage pseudo (positive) emitter coupled logic

Notes:

1. Stresses greater than those listed under absolute maximum ratings may cause permanent damage to the device. This is intended to be a stress rating only and functional operation of the device at these or any other conditions above those indicated in the operation sections of this specification is not implied. Exposure to absolute maximum rating conditions for extended periods may affect reliability.

Table 3. Function Control of the TTL Input Logic used to Accept or Invert the Input Signal

LVTTL/LVCMOS Input Logic			
Input Condition		**Input Logic**	**Output Logic Q Pins, Q1A or Q1**
Ground	Input B (–) Pin 11		
	Input A (+) Pin 10	Input	True
VCC	Input B (–) Pin 11		
	Input A (+) Pin 10	Input	Invert
Ground	Input A (+) Pin 10		
	Input B (–) Pin 11	Input	Invert
VCC	Input A (+) Pin 10		
	Input B (–) Pin 11	Input	True

Table 4. DC Electrical Characteristics: 3.3V–LVDS Input

Parameter	Description	Conditions		Min.	Typ.	Max.	Unit
V_{ID}	Magnitude of Differential Input Voltage			100		600	mV
V_{IC}	Common-mode of Differential Input Voltage$\lvert V_{ID}\rvert$ (min. and max.)			$\lvert V_{ID}\rvert/2$	2.4–($\lvert V_{ID}\rvert/2$)		V
V_{IH}	Input High Voltage	Guaranteed Logic High Level		2			V
V_{IL}	Input Low Voltage	Guaranteed Logic Low Level				0.8	V
I_{IH}	Input High Current	V_{DD} = Max.	$V_{IN} = V_{DD}$		±10	±20	µA
I_{IL}	Input Low Current	V_{DD} = Max.	$V_{IN} = V_{SS}$		±10	±20	µA
I_I	Input High Current	V_{DD} = Max., $V_{IN} = V_{DD}$(Max.)				±20	µA

Table 5. DC Electrical Characteristics: 3.3V–LVPECL Input

Parameter	Description	Conditions		Min.	Typ.	Max.	Unit
V_{ID}	Differential Input Voltage p-p	Guaranteed Logic High Level		400		2600	mV
V_{IH}	Input High Voltage	Guaranteed Logic High Level		2.15		2.4	V
V_{IL}	Input Low Voltage	Guaranteed Logic Low Level		1.5		1.8	V
I_{IH}	Input High Current	V_{DD} = Max.	$V_{IN} = V_{DD}$		±10	±20	µA
I_{IL}	Input Low Current	V_{DD} = Max.	$V_{IN} = V_{SS}$		±10	±20	µA
I_I	Input High Current	V_{DD} = Max., $V_{IN} = V_{DD}$(Max.)				±20	µA
V_{CM}	Common-mode Voltage					225	mV

Table 6. DC Electrical Characteristics: 3.3V–LVTTL/LVCMOS Input

Parameter	Description	Conditions		Min.	Typ.	Max.	Units
V_{IH}	Input High Voltage	Guaranteed Logic High Level		2			V
V_{IL}	Input Low Voltage	Guaranteed Logic Low Level				0.8	V
I_{IH}	Input High Current	V_{DD} = Max	V_{IN} = 2.7V			1	µA
I_{IL}	Input Low Current	V_{DD} = Max	V_{IN} = 0.5V			–1	µA
I_I	Input High Current	V_{DD} = Max., $V_{IN} = V_{DD}$(Max)				20	µA
V_{IK}	Clamp Diode Voltage	V_{DD} = Min., I_{IN} = –18mA			–0.7	–1.2	V
V_H	Input Hysteresis				80		mV

Table 7. DC Electrical Characteristics: 3.3V–LVPECL Output

Parameter	Description	Conditions		Min.	Typ.	Max.	Unit
V_{OD}	Driver Differential Output voltage p-p	V_{DD} = Min., V_{IN} = V_{IH} or V_{IL}	RL = 50 ohm	1000		3600	mV
V_{OC}	Driver common-mode p-p	V_{DD} = Min., V_{IN} = V_IH or V_{IL}	RL = 50 ohm			300	mV
Rise Time	Differential 20% to 80%	CL–10 pF RL and CL to GND	RL = 50 ohm	300		1200	ps
Fall Time							
V_{OH}	Output High Voltage	V_{DD} = Min., V_{IN} = V_{IH} or V_{IL}	I_{OH} = –12 mA	2.1		3.0	V
V_{OL}	Output Low Voltage	V_{DD} = Min., V_{IN} = V_{IH} or V_{IL} User defined by VTT RTT.		0.8		1.3	V
I_{OS}	Short Circuit Current	V_{DD} = Max, V_{OUT} = GND		–125		–150	mA

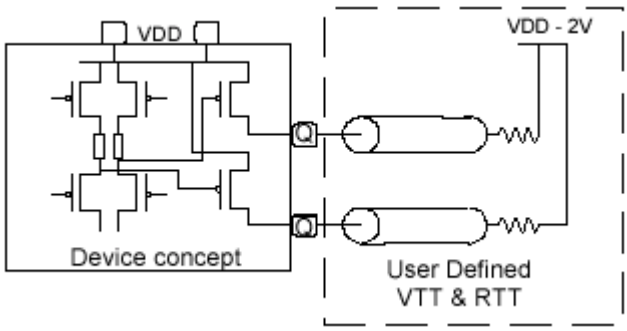

Driver Design

Table 8. AC Switching Characteristics @ 3.3 V (V_{DD} = 3.3V ±5%, Temperature = –40°C to +85°C)

Parameter	Description	Conditions	Min.	Typ.	Max.	Unit
t_{PLH}	Propagation Delay – Low to High	V_{OD} = 100 mV	3	4	5	ns
t_{PHL}	Propagation Delay – High to Low		3	4	5	ns
T_{PE}	Enable (EN) to functional operation				6	ns
T_{PD}	Functional operation to Disable				5	ns
$t_{SK(0)}$	Output Skew: Skew between outputs of the same package (in phase)				0.2	ns
$t_{SK(p)}$	Pulse Skew: Skew between opposite transitions of the same output (t_{PHL}–t_{PLH})			0.2		ns
$t_{SK(t)}$	Package Skew: Skew between outputs of different packages at the same power supply voltage, temperature and package type. Same input signal level and output load.	V_{ID} = 100 mV			1	ns

Table 9. High-frequency Parametrics

Parameter	Description	Conditions	Min.	Typ.	Max.	Unit
Fmax	Maximum frequency V_{DD} = 3.3V	45%–55% duty cycle Standard load circuit			350	MHz

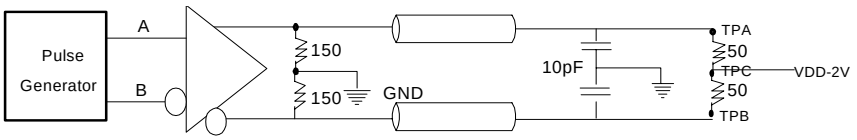

Standard Termination

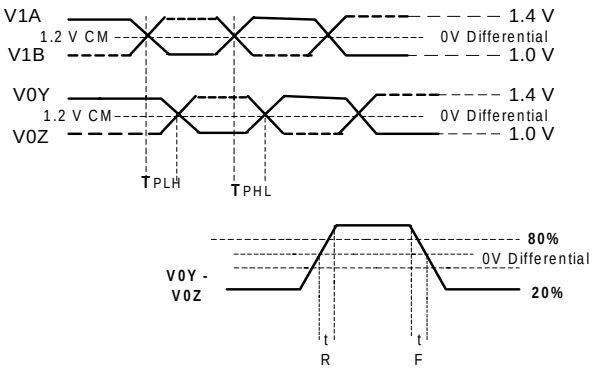

Figure 1. Differential Receiver to Driver Propagation Delay and Driver Transition Time[2,3,4,5]

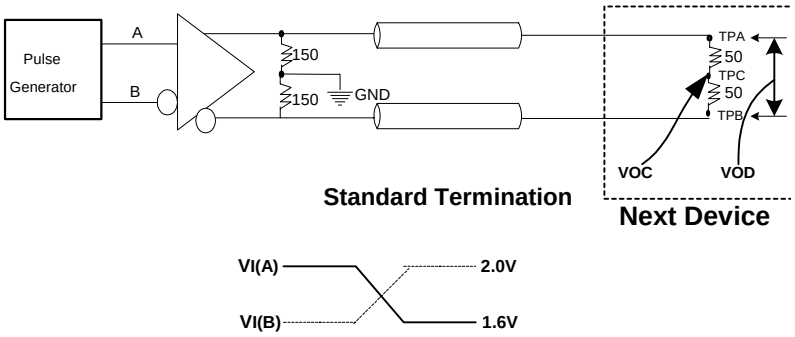

Figure 2. Test Circuit and Voltage Definitions for the Driver Common-Mode Output Voltage[2,3,4,5]

Notes:

2. All input pulses are supplied by a frequency generator with the following characteristics: t_R and $t_F \leq 1$ ns; pulse rerate = 50 Mpps; pulse width = 10 ± 0.2 ns.
3. RL = 50 ohm ± 1%; Zline = 50 ohm 6".
4. CL includes instrumentation and fixture capacitance within 6 mm of the UT.
5. TPA and B are used for prop delay and Rise/Fall measurements. TPC is used for VOC measurements only and is otherwise connected to $V_{DD} - 2$.

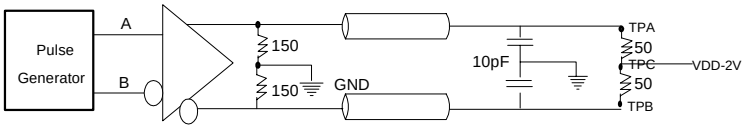

Standard Termination

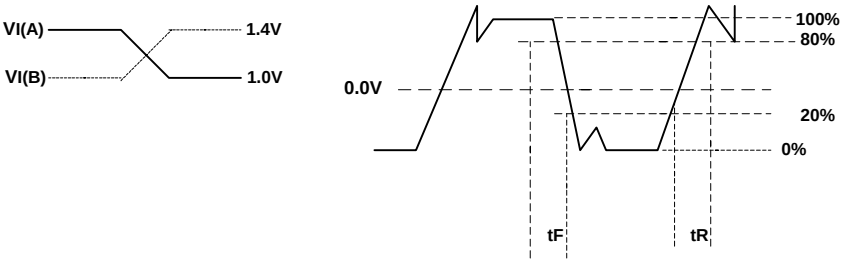

Figure 3. Test Circuit and Voltage Definitions for the Differential Output Signal[2,3,4,5]

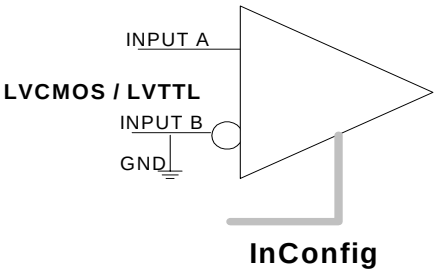

1	**LVTTL/LVCMOS**

Figure 4. [6]

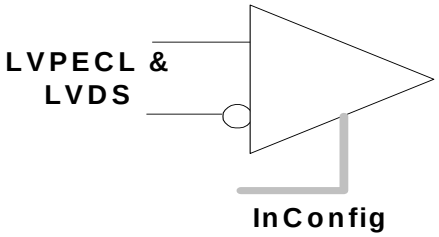

0	**LVDS/LVPECL**

Figure 5. [7]

Notes:
6. See *Table 3*.
7. LVPECL or LVDS differential input value.

Ordering Information

Part Number	Package Type	Product Flow
CY2DP818ZI	38-pin TSSOP	Industrial, –40° to 85°C
CY2DP818ZIT	38-pin TSSOP–Tape and Reel	Industrial, –40° to 85°C
CY2DP818ZC	38-pin TSSOP	Commercial, 0°C to 70°C
CY2DP818ZCT	38-pin TSSOP–Tape and Reel	Commercial, 0°C to 70°C

Package Drawing and Dimensions

38-lead TSSOP (4.40 mm Body) Z38

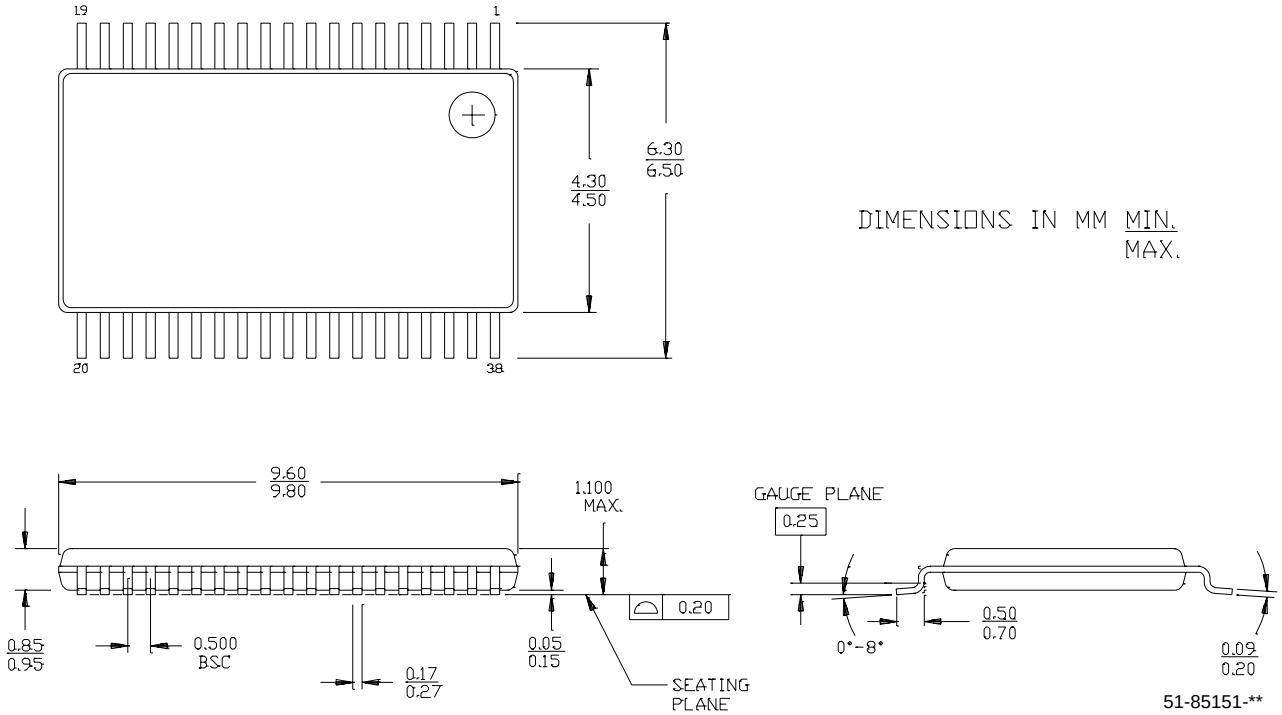

ComLink is a trademark of Cypress Semiconductor Corporation. All product and company names mentioned in this document are the trademarks of their respective holders.

© Cypress Semiconductor Corporation, 2002. The information contained herein is subject to change without notice. Cypress Semiconductor Corporation assumes no responsibility for the use of any circuitry other than circuitry embodied in a Cypress Semiconductor product. Nor does it convey or imply any license under patent or other rights. Cypress Semiconductor does not authorize its products for use as critical components in life-support systems where a malfunction or failure may reasonably be expected to result in significant injury to the user. The inclusion of Cypress Semiconductor products in life-support systems application implies that the manufacturer assumes all risk of such use and in doing so indemnifies Cypress Semiconductor against all charges.

Document Title: CY2DP818 1:8 Clock Fanout Buffer Document Number: 38-07061				
REV.	**ECN NO.**	**Issue Date**	**Orig. of Change**	**Description of Change**
**	107086	06/07/01	IKA	New Data Sheet
*A	115913	07/11/02	CTK	IC, VCM, VOC, Rise/Fall Time Fmax (20)

НИОКР СИСТЕМС

ООО «НИОКРсистемс» - это оперативные поставки широкого спектра электронных компонентов отечественного и импортного производства напрямую от производителей и с крупнейших мировых складов. Реализуемая нашей компанией продукция насчитывает более полумиллиона наименований.

Благодаря этому наша компания предлагает к поставке практически не ограниченный ассортимент компонентов как оптовыми, мелкооптовыми партиями, так и в розницу.

Благодаря развитой сети поставщиков, помогаем в поиске и приобретении экзотичных или снятых с производства компонентов.

Наша компания это:

- Гарантия качества поставляемой продукции
- Широкий ассортимент
- Минимальные сроки поставок
- Техническая поддержка
- Подбор комплектации
- Индивидуальный подход
- Гибкое ценообразование
- Работаем по 275 ФЗ

ООО «НИОКР СИТЕМС»
Москва, 125362, Россия, ул. Вишневая, д. 9, к. 1, Блок 104 а и 104 в

Телефон: 8 (495) 268-14-82
Email: n@nsistems.ru

ИНН: 7735154786
ОГРН: 1167746717709