CS8183

Dual Micropower 200 mA Low Dropout Tracking Regulator/Line Driver

The CS8183 is a dual low dropout tracking regulator designed to provide adjustable buffered output voltages that closely track (±10 mV) the reference inputs. The outputs deliver up to 200 mA while being able to be configured higher, lower or equal to the reference voltages.

The outputs have been designed to operate over a wide range (2.8 V to 45 V) while still maintaining excellent DC characteristics. The CS8183 is protected from reverse battery, short circuit and thermal runaway conditions. The device also can withstand 45 V load dump transients and −50 V reverse polarity input voltage transients. This makes it suitable for use in automotive environments.

The V_{REF}/ENABLE leads serve two purposes. They are used to provide the input voltage as a reference for the output and they also can be pulled low to place the device in sleep mode where it nominally draws less than 30 μA from the supply.

The two trackers can be combined in parallel doubling the capability to 400 mA for a single application.

Features

- Two Regulated Outputs 200 mA, ±10 mV Track Worst Case
- Low Dropout (0.35 V typ @ 200 mA)
- Low Quiescent Current
- Independent Thermal Shutdown
- Short Circuit Protection
- Wide Operating Range
- Internally Fused Leads in the SO−20W Package
- These are Pb−Free Devices

*For additional information on our Pb−Free strategy and soldering details, please download the ON Semiconductor Soldering and Mounting Techniques Reference Manual, SOLDERRM/D.

ON Semiconductor®

http://onsemi.com

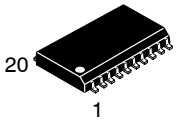

SO−20WB
DWF SUFFIX
CASE 751D

PIN CONNECTIONS AND MARKING DIAGRAM

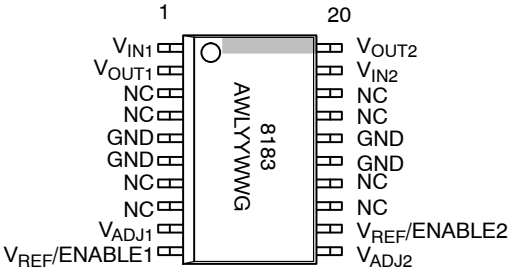

8183	= Specific Device Code
A	= Assembly Location
WL	= Wafer Lot
YY	= Year
WW	= Work Week
G	= Pb−Free Package

ORDERING INFORMATION

Device	Package	Shipping†
CS8183YDWF20G	SO−20WB (Pb−Free)	38 Units/Rail
CS8183YDWFR20G	SO−20WB (Pb−Free)	1000/Tape & Reel

†For information on tape and reel specifications, including part orientation and tape sizes, please refer to our Tape and Reel Packaging Specifications Brochure, BRD8011/D.

© Semiconductor Components Industries, LLC, 2008

October, 2008 − Rev. 18

Publication Order Number:
CS8183/D

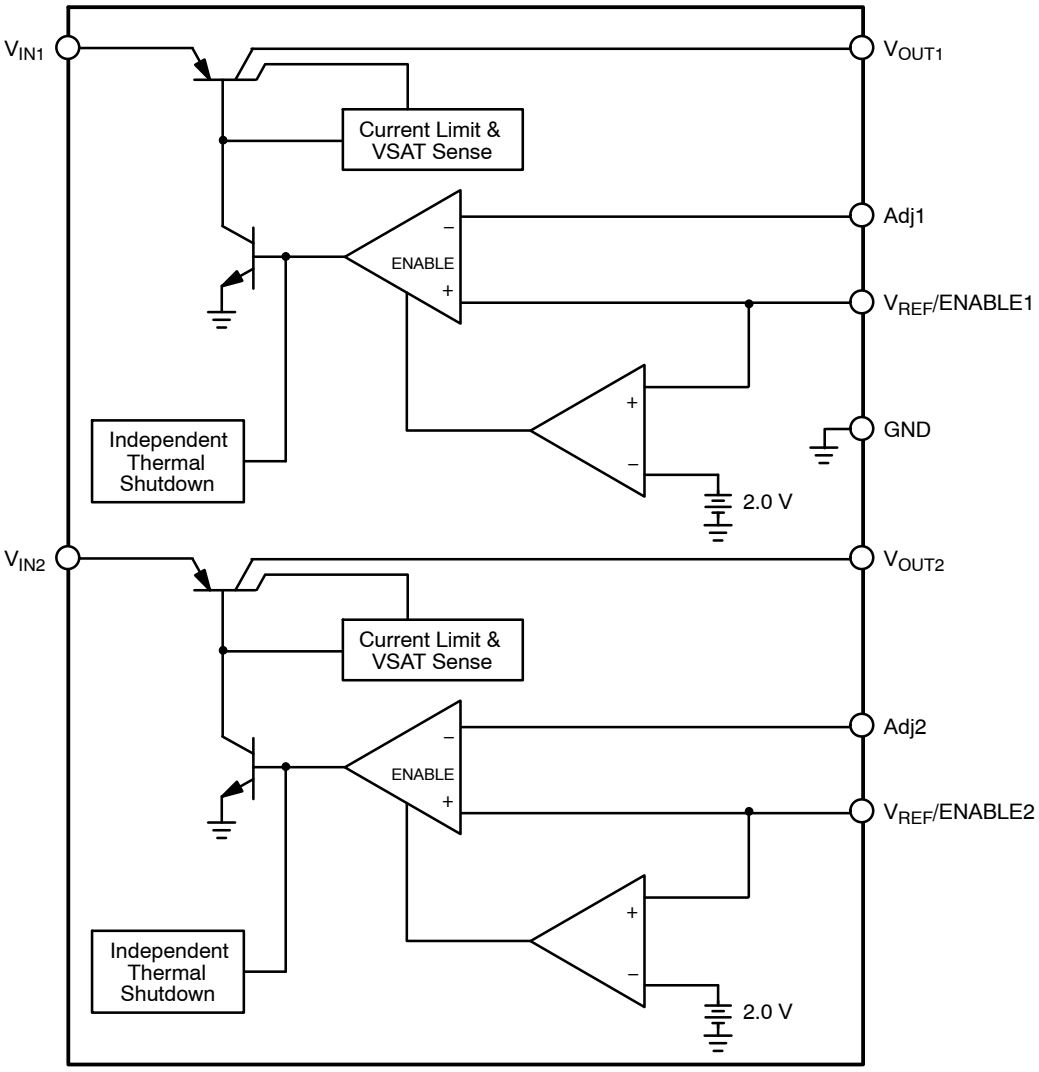

Figure 1. Block Diagram

PACKAGE PIN DESCRIPTION

Package Lead # SO−20W	Lead Symbol	Function
1	V_{IN1}	Input voltage for V_{OUT1}.
2	V_{OUT1}	Regulated output voltage 1.
3, 4, 7, 8, 13, 14, 17, 18	NC	No connection.
5, 6, 15, 16	GND	Ground (4 leads fused).
9	V_{ADJ1}	Adjust lead for V_{OUT1}.
10	V_{REF}/ENABLE1	Reference voltage and ENABLE input for V_{OUT1}.
11	V_{ADJ2}	Adjust lead for V_{OUT2}.
12	V_{REF}/ENABLE2	Reference voltage and ENABLE input for V_{OUT2}.
19	V_{IN2}	Input voltage for V_{OUT2}.
20	V_{OUT2}	Regulated output voltage 2.

MAXIMUM RATINGS

Rating	Value	Unit
Storage Temperature	−65 to 150	°C
Supply Voltage Range (continuous)	15 to 45	V
Supply Voltage Range (normal, continuous)	3.4 to 45	V
Peak Transient Voltage (V_{IN} = 14 V, Load Dump Transient = 31 V)	45	V
Voltage Range (Adj, V_{REF}/ENABLE, V_{OUT})	−10 to 45	V
Maximum Junction Temperature	150	°C
Package Thermal Resistance Junction−to−Case, $R_{\theta JC}$ Junction−to−Ambient, $R_{\theta JA}$	 18 73	 °C/W °C/W
ESD Capability (Human Body Model) (Machine Model)	2.0 200	kV V
Lead Temperature Soldering Reflow: (SMD styles only) (Note 1)	240 peak (Note 2)	°C

Stresses exceeding Maximum Ratings may damage the device. Maximum Ratings are stress ratings only. Functional operation above the Recommended Operating Conditions is not implied. Extended exposure to stresses above the Recommended Operating Conditions may affect device reliability.

1. 60 second maximum above 183°C.
2. −5°C/+0°C allowable conditions.

ELECTRICAL CHARACTERISTICS

(V_{IN} = 14 V; V_{REF}/ENABLE > 2.75 V; −40°C ≤ T_J ≤ +125°C; C_{OUT} ≥ 10 μF; 0.1 Ω < $C_{OUT\ -\ ESR}$ < 1.0 Ω @ 10 kHz; unless otherwise stated.)

Parameter	Test Conditions	Min	Typ	Max	Unit
REGULAR OUTPUT 1, 2					
V_{REF} − V_{OUT} V_{OUT} Tracking Error	4.5 V ≤ V_{IN} ≤ 26 V, 100 μA ≤ I_{OUT} ≤ 200 mA, (Note 3)	−10	–	10	mV
Dropout Voltage (V_{IN} − V_{OUT})	I_{OUT} = 100 μA I_{OUT} = 200 mA	– –	100 350	150 600	mV mV
Line Regulation	4.5 V ≤ V_{IN} ≤ 26 V, (Note 3)	–	–	10	mV
Load Regulation	100 μA ≤ I_{OUT} ≤ 200 mA, (Note 3)	–	–	10	mV
Adj Lead Current	Loop in Regulation	–	0.2	1.0	μA
Current Limit	V_{IN} = 14 V, V_{REF} = 5.0 V, V_{OUT} = 90% of V_{REF}, (Note 3)	225	–	700	mA
Quiescent Current (I_{IN} − I_{OUT})	V_{IN} = 12 V, I_{OUT} = 200 mA V_{IN} = 12 V, I_{OUT} = 100 μA V_{IN} = 12 V, V_{REF}/ENABLE = 0 V	– – –	15 75 30	25 150 55	mA μA μA
Reverse Current	V_{OUT} = 5.0 V, V_{IN} = 0 V	–	0.2	1.5	mA
Ripple Rejection	f = 120 Hz, IOUT = 200 mA, 4.5 V ≤ V_{IN} ≤ 26 V	60	–	–	dB
Thermal Shutdown	–	150	180	210	°C
V_{REF}/ENABLE 1, 2					
Enable Voltage	–	0.80	2.00	2.75	V
Input Bias Current	V_{REF}/ENABLE 1, 2 > 2.0 V	–	0.2	1.0	μA

3. V_{OUT} connected to Adj lead.

TYPICAL CHARACTERISTICS

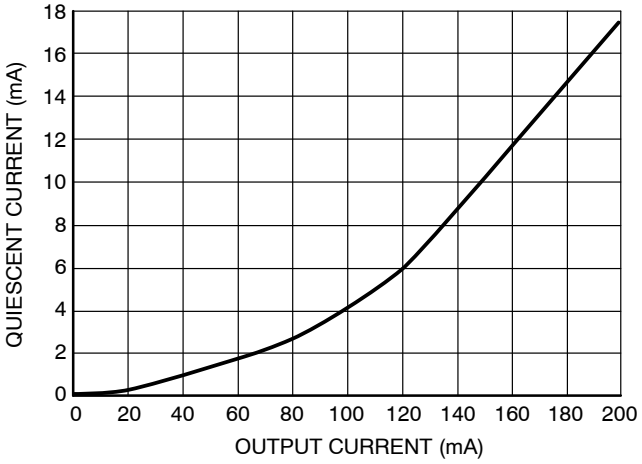

Figure 2. Quiescent Current vs. Output Current

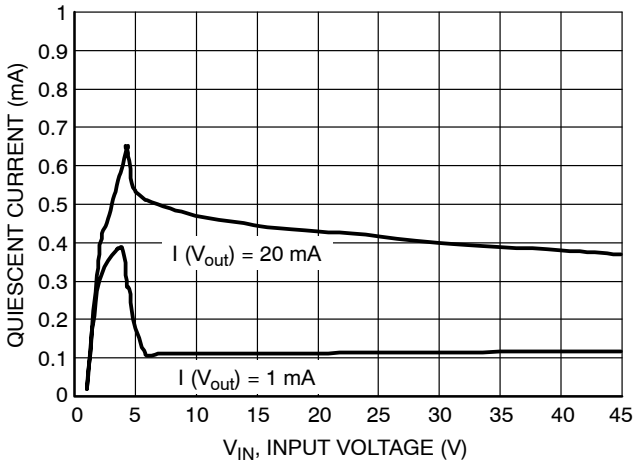

Figure 3. Quiescent Current vs. Input Voltage (Operating Mode)

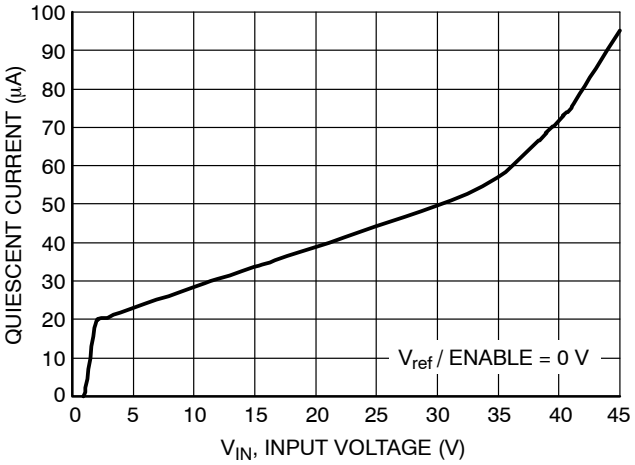

Figure 4. Quiescent Current vs. Input Voltage (Sleep Mode)

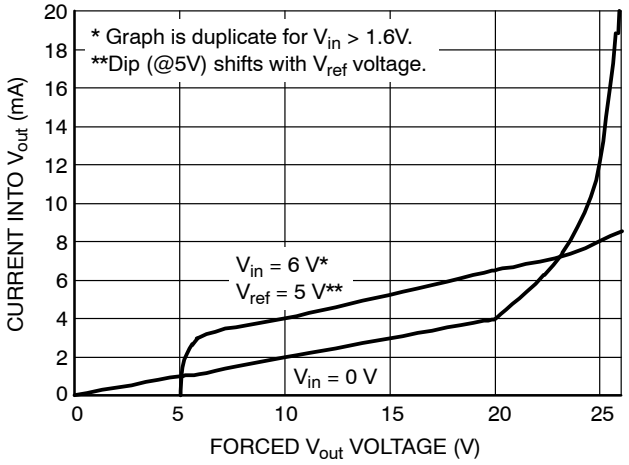

Figure 5. V_{out} Reverse Current

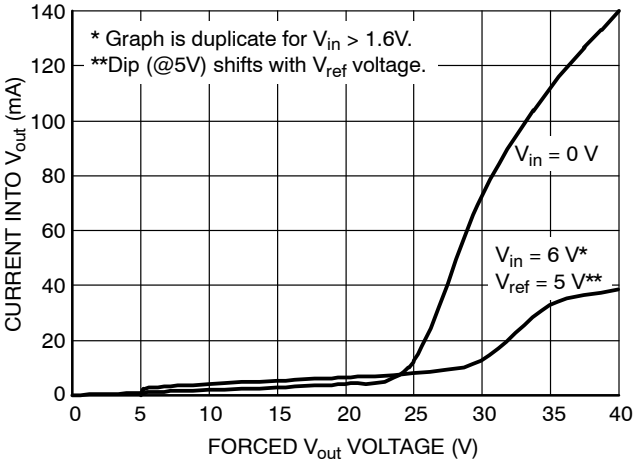

Figure 6. V_{out} Reverse Current

CIRCUIT DESCRIPTION

ENABLE Function

By pulling the V_{REF}/ENABLE 1, 2 lead below 2.0 V typically, (see Figure 10 or Figure 11), the IC is disabled and enters a sleep state where the device draws less than 30 μA from supply. When the V_{REF}/ENABLE lead is greater than 2.75 V, V_{OUT} tracks the V_{REF}/ENABLE lead normally.

Output Voltage

Figures 7 through 12 only display one channel of the device for simplicity. The configurations shown apply for both channels.

The outputs are capable of supplying 200 mA to the load while configured as a similiar (Figure 7), lower (Figure 9), or higher (Figure 8) voltage as the reference lead. The Adj lead acts as the inverting terminal of the op amp and the V_{REF} lead as the non−inverting.

The device can also be configured as a high−side driver as displayed in Figure 12.

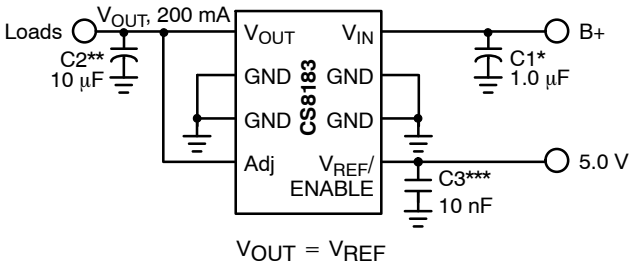

Figure 7. Tracking Regulator at the Same Voltage

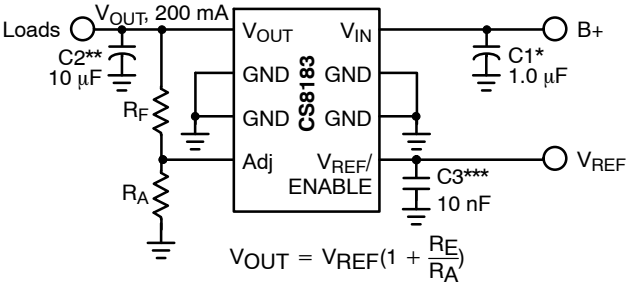

Figure 8. Tracking Regulator at Higher Voltages

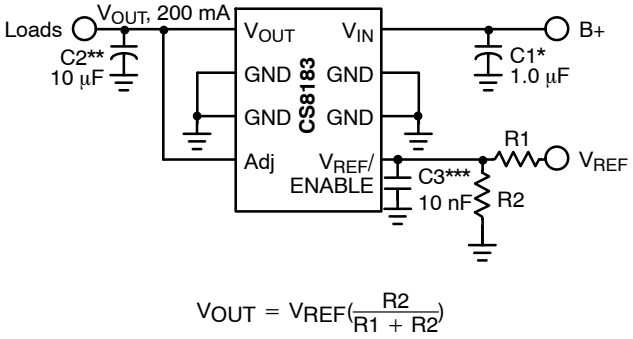

Figure 9. Tracking Regulator at Lower Voltages

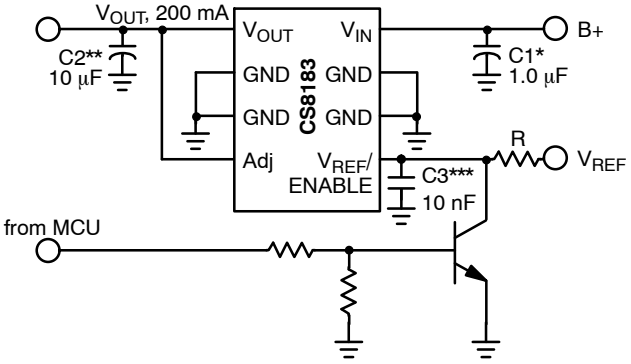

Figure 10. Tracking Regulator with ENABLE Circuit

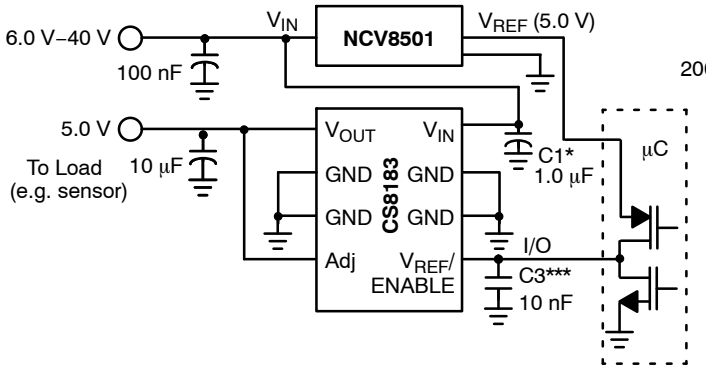

Figure 11. Alternative ENABLE Circuit

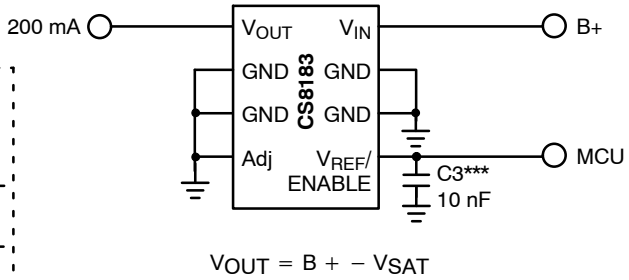

Figure 12. High−Side Driver

* C1 is required if the regulator is far from the power source filter
** C2 is required for stability
*** C3 is recommended for EMC susceptibility

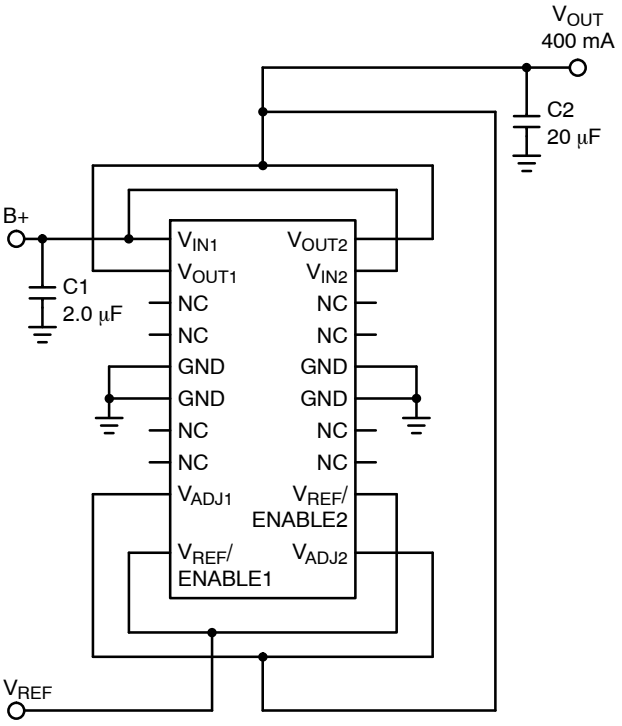

Figure 13. 400 mA Loading

400 mA Output Capability

Normally regulator outputs cannot be combined to increase capability. This can cause damage to an IC because of mismatches in the output drivers. The tight tolerances in tracking of the CS8183 allow their outputs to be combined for increased performance. Figure 13 shows the circuit connections needed to perform this function.

APPLICATION NOTES

Switched Application

The CS8183 has been designed for use in systems where the reference voltage on the V_{REF}/ENABLE pin is continuously on. Typically, the current into the V_{REF}/ENABLE pin will be less than 1.0 μA when the voltage on the V_{IN} pin (usually the ignition line) has been switched out (V_{IN} can be at high impedance or at ground.) Reference Figure 14.

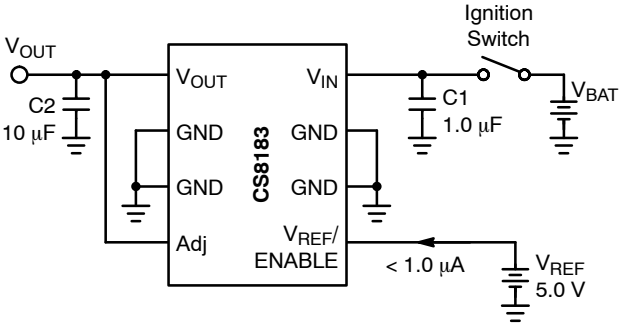

Figure 14.

External Capacitors

Output capacitors for the CS8183 are required for stability. Without them, the regulator outputs will oscillate. Actual size and type may vary depending upon the application load and temperature range. Capacitor effective series resistance (ESR) is also a factor in the IC stability. Worst−case is determined at the minimum ambient temperature and maximum load expected.

The output capacitors can be increased in size to any desired value above the minimum. One possible purpose of this would be to maintain the output voltage during brief conditions of negative input transients that might be characteristic of a particular system.

The capacitors must also be rated at all ambient temperatures expected in the system. To maintain regulator stability down to −40°C, a capacitor rated at that temperature must be used.

More information on capacitor selection for SMART REGULATOR®s is available in the SMART REGULATOR application note, “Compensation for Linear Regulators.”

Calculating Power Dissipation in a Dual Output Linear Regulator

The maximum power dissipation for a dual output regulator (Figure 15) is:

$$\begin{aligned} PD(max) = {} & \{V_{IN}(max) - V_{OUT1}(min)\}\, I_{OUT1}(max) \\ & + \{V_{IN}(max) - V_{OUT2}(min)\} I_{OUT2}(max2) \\ & + V_{IN}(max) I_Q \end{aligned} \quad (1)$$

where:

$V_{IN(max)}$ is the maximum input voltage,

$V_{OUT1(min)}$ is the minimum output voltage from V_{OUT1},

$V_{OUT2(min)}$ is the minimum output voltage from V_{OUT2},

$I_{OUT1(max)}$ is the maximum output current, for the application,

$I_{OUT2(max)}$ is the maximum output current, for the application,

I_Q is the quiescent current the regulator consumes at $I_{OUT(max)}$.

Once the value of PD(max) is known, the maximum permissible value of $R_{\theta JA}$ can be calculated:

$$R_{\theta JA} = \frac{150°C - T_A}{P_D} \quad (2)$$

The value of $R_{\theta JA}$ can then be compared with those in the package section of the data sheet. Those packages with $R_{\theta JA}$'s less than the calculated value in equation 2 will keep the die temperature below 150°C.

In some cases, none of the packages will be sufficient to dissipate the heat generated by the IC, and an external heat sink will be required.

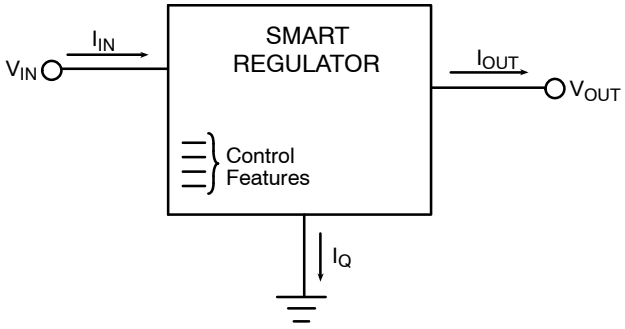

Figure 15. Dual Output Regulator with Key Performance Parameters Labeled

Heatsinks

A heatsink effectively increases the surface area of the package to improve the flow of heat away from the IC and into the surrounding air.

Each material in the heat flow path between the IC and the outside environment will have a thermal resistance. Like series electrical resistances, these resistances are summed to determine the value of $R_{\theta JA}$:

$$R_{\theta JA} = R_{\theta JC} + R_{\theta CS} + R_{\theta SA} \quad (3)$$

where:

$R_{\theta JC}$ = the junction−to−case thermal resistance,

$R_{\theta CS}$ = the case−to−heatsink thermal resistance, and

$R_{\theta SA}$ = the heatsink−to−ambient thermal resistance.

$R_{\theta JC}$ appears in the package section of the data sheet. Like $R_{\theta JA}$, it is a function of package type. $R_{\theta CS}$ and $R_{\theta SA}$ are functions of the package type, heatsink and the interface between them. These values appear in heat sink data sheets of heat sink manufacturers.

PACKAGE DIMENSIONS

SO−20 WB
CASE 751D−05
ISSUE G

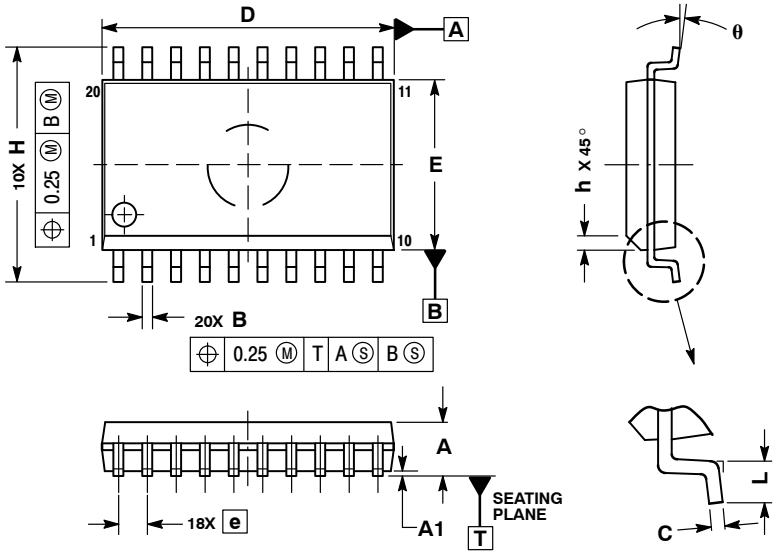

NOTES:
1. DIMENSIONS ARE IN MILLIMETERS.
2. INTERPRET DIMENSIONS AND TOLERANCES PER ASME Y14.5M, 1994.
3. DIMENSIONS D AND E DO NOT INCLUDE MOLD PROTRUSION.
4. MAXIMUM MOLD PROTRUSION 0.15 PER SIDE.
5. DIMENSION B DOES NOT INCLUDE DAMBAR PROTRUSION. ALLOWABLE PROTRUSION SHALL BE 0.13 TOTAL IN EXCESS OF B DIMENSION AT MAXIMUM MATERIAL CONDITION.

	MILLIMETERS	
DIM	MIN	MAX
A	2.35	2.65
A1	0.10	0.25
B	0.35	0.49
C	0.23	0.32
D	12.65	12.95
E	7.40	7.60
e	1.27 BSC	
H	10.05	10.55
h	0.25	0.75
L	0.50	0.90
θ	0°	7°

ON Semiconductor and ON are registered trademarks of Semiconductor Components Industries, LLC (SCILLC). SCILLC reserves the right to make changes without further notice to any products herein. SCILLC makes no warranty, representation or guarantee regarding the suitability of its products for any particular purpose, nor does SCILLC assume any liability arising out of the application or use of any product or circuit, and specifically disclaims any and all liability, including without limitation special, consequential or incidental damages. “Typical” parameters which may be provided in SCILLC data sheets and/or specifications can and do vary in different applications and actual performance may vary over time. All operating parameters, including “Typicals” must be validated for each customer application by customer’s technical experts. SCILLC does not convey any license under its patent rights nor the rights of others. SCILLC products are not designed, intended, or authorized for use as components in systems intended for surgical implant into the body, or other applications intended to support or sustain life, or for any other application in which the failure of the SCILLC product could create a situation where personal injury or death may occur. Should Buyer purchase or use SCILLC products for any such unintended or unauthorized application, Buyer shall indemnify and hold SCILLC and its officers, employees, subsidiaries, affiliates, and distributors harmless against all claims, costs, damages, and expenses, and reasonable attorney fees arising out of, directly or indirectly, any claim of personal injury or death associated with such unintended or unauthorized use, even if such claim alleges that SCILLC was negligent regarding the design or manufacture of the part. SCILLC is an Equal Opportunity/Affirmative Action Employer. This literature is subject to all applicable copyright laws and is not for resale in any manner.

PUBLICATION ORDERING INFORMATION

LITERATURE FULFILLMENT:
Literature Distribution Center for ON Semiconductor
P.O. Box 5163, Denver, Colorado 80217 USA
Phone: 303−675−2175 or 800−344−3860 Toll Free USA/Canada
Fax: 303−675−2176 or 800−344−3867 Toll Free USA/Canada
Email: orderlit@onsemi.com

N. American Technical Support: 800−282−9855 Toll Free USA/Canada
Europe, Middle East and Africa Technical Support:
Phone: 421 33 790 2910
Japan Customer Focus Center
Phone: 81−3−5773−3850

ON Semiconductor Website: **www.onsemi.com**

Order Literature: http://www.onsemi.com/orderlit

For additional information, please contact your local Sales Representative

НИОКР СИСТЕМС

ООО «НИОКРсистемс» - это оперативные поставки широкого спектра электронных компонентов отечественного и импортного производства напрямую от производителей и с крупнейших мировых складов. Реализуемая нашей компанией продукция насчитывает более полумиллиона наименований.

Благодаря этому наша компания предлагает к поставке практически не ограниченный ассортимент компонентов как оптовыми, мелкооптовыми партиями, так и в розницу.

Благодаря развитой сети поставщиков, помогаем в поиске и приобретении экзотичных или снятых с производства компонентов.

Наша компания это:

- Гарантия качества поставляемой продукции
- Широкий ассортимент
- Минимальные сроки поставок
- Техническая поддержка
- Подбор комплектации
- Индивидуальный подход
- Гибкое ценообразование
- Работаем по 275 ФЗ

ООО «НИОКР СИТЕМС»
Москва, 125362, Россия, ул. Вишневая, д. 9, к. 1, Блок 104 а и 104 в

Телефон: 8 (495) 268-14-82
Email: n@nsistems.ru

ИНН: 7735154786
ОГРН: 1167746717709