DATA SHEET

74ALVCH16374

2.5V/3.3V 16-bit edge-triggered D-type flip-flop (3-State)

Product specification
Supersedes data of 1997 Mar 21
IC24 Data Handbook

1998 Jun 18

Philips
Semiconductors

PHILIPS

16-bit edge-triggered D-type flip-flop (3-State) 74ALVCH16374

FEATURES

- Wide supply voltage range of 1.2 V to 3.6 V
- Complies with JEDEC standard no. 8-1A
- CMOS low power consumption
- MULTIBYTE™ flow-through standard pin-out architecture
- Low inductance multiple V_{CC} and ground pins for minimum noise and ground bounce
- Direct interface with TTL levels
- All data inputs have bushold
- Output drive capability 50Ω transmission lines @ 85°C
- Current drive ±24 mA at 3.0 V

PIN CONFIGURATION

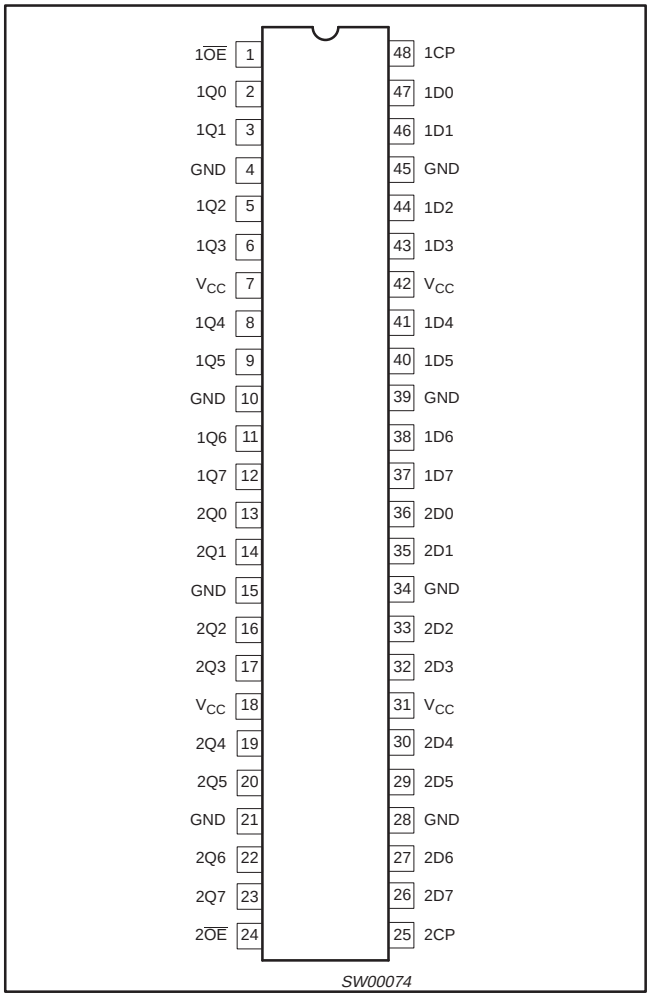

DESCRIPTION

The 74ALVCH16374 is a 16-bit edge-triggered flip-flop featuring separate D-type inputs for each flip-flop and 3-State outputs for bus oriented applications. Incorporates bus hold data inputs which eliminate the need for external pull-up or pull-down resistors to hold unused inputs. The 74ALVCH16374 consists of 2 sections of eight edge-triggered flip-flops. A clock (CP) input and an output enable ($\overline{OE}$) are provided per 8-bit section.

The flip-flops will store the state of their individual D-inputs that meet the set-up and hold time requirements on the LOW-to-HIGH CP transition.

When $\overline{OE}$ is LOW, the contents of the flip-flops are available at the outputs. When $\overline{OE}$ is HIGH, the outputs go to the high impedance OFF-state. Operation of the $\overline{OE}$ input does not affect the state of the flip-flops.

QUICK REFERENCE DATA

GND = 0V; T_{amb} = 25°C; $t_r = t_f \leq 2.5$ ns

SYMBOL	PARAMETER	CONDITIONS		TYPICAL	UNIT
t_{PHL}/t_{PLH}	Propagation delay CP to Qn	V_{CC} = 2.5V, C_L = 30pF		2.3	ns
		V_{CC} = 3.3V, C_L = 50pF		2.4	
f_{MAX}	Maximum clock frequency	V_{CC} = 2.5V		300	MHz
		V_{CC} = 3.3V		350	MHz
C_I	Input capacitance			5.0	pF
C_{PD}	Power dissipation capacitance per flip-flop	V_I = GND to V_{CC}[1]	Outputs enabled	16	pF
			Outputs disabled	10	

NOTE:

1. C_{PD} is used to determine the dynamic power dissipation (P_D in μW):
   $P_D = C_{PD} \times V_{CC}^2 \times f_i + \Sigma (C_L \times V_{CC}^2 \times f_o)$ where: f_i = input frequency in MHz; C_L = output load capacitance in pF; f_o = output frequency in MHz; V_{CC} = supply voltage in V; $\Sigma (C_L \times V_{CC}^2 \times f_o)$ = sum of outputs.

ORDERING INFORMATION

PACKAGES	TEMPERATURE RANGE	OUTSIDE NORTH AMERICA	NORTH AMERICA	DWG NUMBER
48-Pin Plastic SSOP Type III	–40°C to +85°C	74ALVCH16374 DL	ACH16374 DL	SOT370-1
48-Pin Plastic TSSOP Type II	–40°C to +85°C	74ALVCH16374 DGG	ACH16374 DGG	SOT362-1

PIN DESCRIPTION

PIN NUMBER	SYMBOL	NAME AND FUNCTION
1	$1\overline{OE}$	Output enable input (active LOW)
2, 3, 5, 6, 8, 9, 11, 12	1Q0 to 1Q7	3-State flip-flop outputs
4, 10, 15, 21, 28, 34, 39, 45	GND	Ground (0V)
7, 18, 31, 42	V_{CC}	Positive supply voltage
13, 14, 16, 17, 19, 20, 22, 23	2Q0 to 2Q7	3-State flip-flop outputs
24	$2\overline{OE}$	Output enable input (active LOW)
25	2CP	Clock input
36, 35, 33, 32, 30, 29, 27, 26	2D0 to 2D7	Data inputs
47, 46, 44, 43, 41, 40, 38, 37	1D0 to 1D7	Data inputs
48	1CP	Clock input

LOGIC SYMBOL

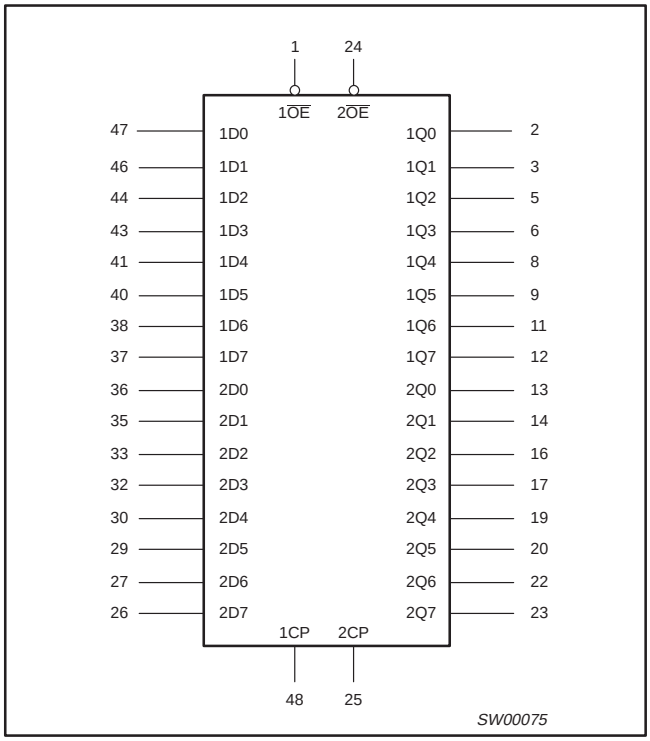

LOGIC DIAGRAM

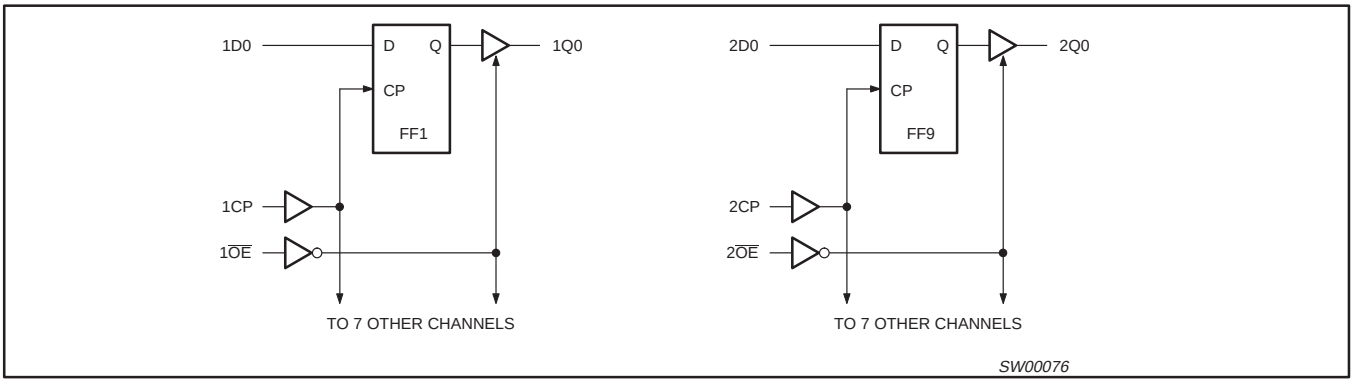

FUNCTION TABLE

OPERATING MODES	INPUTS			INTERNAL FLIP-FLOPS	OUTPUTS
	$\overline{OE}$	CP	Dn		Q0 to Q7
Load and read register	L L	↑ ↑	l h	L H	L H
Load register and disable outputs	H H	↑ ↑	l h	L H	Z Z

H = HIGH voltage level
h = HIGH voltage level one set-up time prior to the HIGH-to-LOW LE transition
L = LOW voltage level
l = LOW voltage level one set-up time prior to the HIGH-to-LOW LE transition
Z = high impedance OFF-state
↑ = LOW-to-HIGH CP transition

LOGIC SYMBOL (IEEE/IEC)

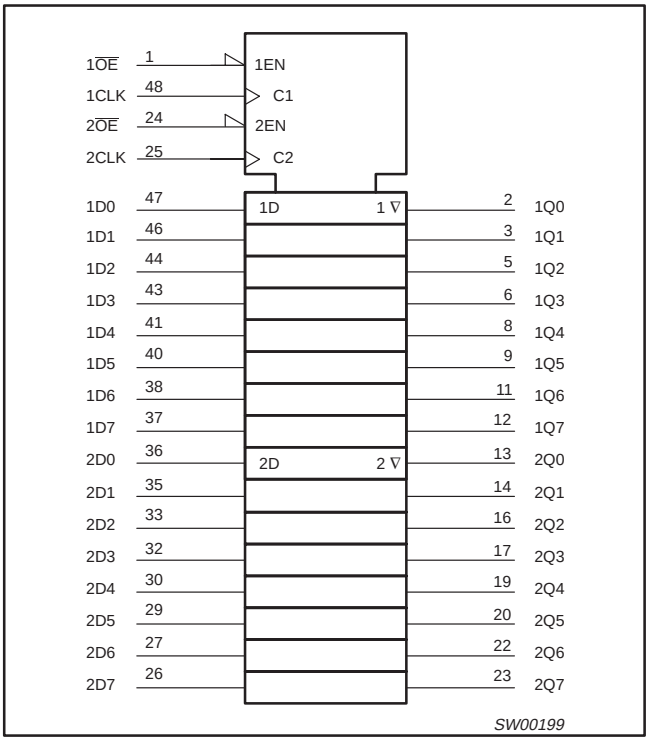

BUS HOLD CIRCUIT

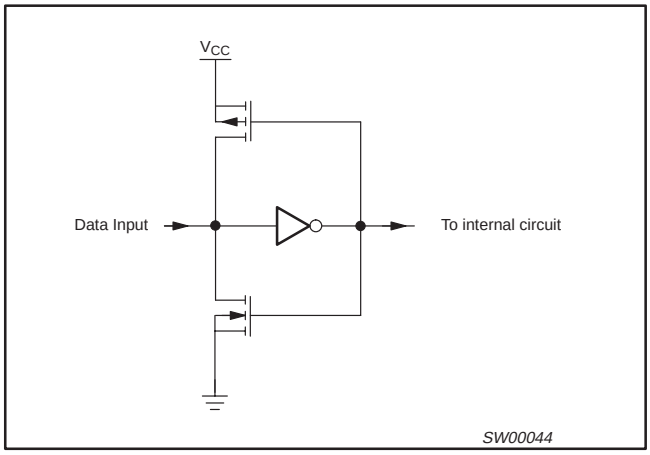

RECOMMENDED OPERATING CONDITIONS

SYMBOL	PARAMETER	CONDITIONS	LIMITS		UNIT
			MIN	MAX	
V_{CC}	DC supply voltage 2.5V range (for max. speed performance @ 30 pF output load)		2.3	2.7	V
	DC supply voltage 3.3V range (for max. speed performance @ 50 pF output load)		3.0	3.6	
	DC supply voltage (for low-voltage applications)		1.2	3.6	
V_I	DC Input voltage range	For data input pins	0	V_{CC}	V
		For control pins	0	5.5	
V_O	DC output voltage range		0	V_{CC}	V
T_{amb}	Operating free-air temperature range		–40	+85	°C
t_r, t_f	Input rise and fall times	V_{CC} = 2.3 to 3.0V V_{CC} = 3.0 to 3.6V	0 0	20 10	ns/V

ABSOLUTE MAXIMUM RATINGS

In accordance with the Absolute Maximum Rating System (IEC 134)
Voltages are referenced to GND (ground = 0V)

SYMBOL	PARAMETER	CONDITIONS	RATING	UNIT
V_{CC}	DC supply voltage		–0.5 to +4.6	V
I_{IK}	DC input diode current	$V_I < 0$	–50	mA
V_I	DC input voltage	For control pins[1]	–0.5 to +4.6	V
		For data inputs[1]	–0.5 to V_{CC} +0.5	
I_{OK}	DC output diode current	$V_O > V_{CC}$ or $V_O < 0$	±50	mA
V_O	DC output voltage	Note 1	–0.5 to V_{CC} +0.5	V
I_O	DC output source or sink current	V_O = 0 to V_{CC}	±50	mA
I_{GND}, I_{CC}	DC V_{CC} or GND current		±100	mA
T_{stg}	Storage temperature range		–65 to +150	°C
P_{TOT}	Power dissipation per package –plastic medium-shrink (SSOP) –plastic thin-medium-shrink (TSSOP)	For temperature range: –40 to +125 °C above +55°C derate linearly with 11.3 mW/K above +55°C derate linearly with 8 mW/K	 850 600	mW

NOTE:
1. The input and output voltage ratings may be exceeded if the input and output current ratings are observed.

DC ELECTRICAL CHARACTERISTICS

Over recommended operating conditions. Voltage are referenced to GND (ground = 0 V).

SYMBOL	PARAMETER	TEST CONDITIONS	LIMITS			UNIT
			Temp = -40°C to +85°C			
			MIN	TYP[1]	MAX	
V_{IH}	HIGH level Input voltage	V_{CC} = 1.2V	V_{CC}			V
		V_{CC} = 1.8V	0.7*V_{CC}	0.9		
		V_{CC} = 2.3 to 2.7V	1.7	1.2		
		V_{CC} = 2.7 to 3.6V	2.0	1.5		
V_{IL}	LOW level Input voltage	V_{CC} = 1.2V			GND	V
		V_{CC} = 1.8V		0.9	0.2*V_{CC}	
		V_{CC} = 2.3 to 2.7V		1.2	0.7	
		V_{CC} = 2.7 to 3.6V		1.5	0.8	
V_{OH}	HIGH level output voltage	V_{CC} = 1.8 to 3.6V; $V_I = V_{IH}$ or V_{IL}; I_O = –100µA	V_{CC} – 0.2	V_{CC}		V
		V_{CC} = 1.8V; $V_I = V_{IH}$ or V_{IL}; I_O = –6mA	V_{CC} – 0.4	V_{CC} – 0.10		
		V_{CC} = 2.3V; $V_I = V_{IH}$ or V_{IL}; I_O = –6mA	V_{CC} – 0.3	V_{CC} – 0.08		
		V_{CC} = 2.3V; $V_I = V_{IH}$ or V_{IL}; I_O = –12mA	V_{CC} – 0.5	V_{CC} – 0.17		
		V_{CC} = 2.3V; $V_I = V_{IH}$ or V_{IL}; I_O = –18mA	V_{CC} – 0.6	V_{CC} – 0.26		
		V_{CC} = 2.7V; $V_I = V_{IH}$ or V_{IL}; I_O = –12mA	V_{CC} – 0.5	V_{CC} – 0.14		
		V_{CC} = 3.0V; $V_I = V_{IH}$ or V_{IL}; I_O = –24mA	V_{CC} – 1.0	V_{CC} – 0.28		

DC ELECTRICAL CHARACTERISTICS (Continued)

Over recommended operating conditions. Voltage are referenced to GND (ground = 0 V).

SYMBOL	PARAMETER	TEST CONDITIONS	LIMITS			UNIT
			Temp = -40°C to +85°C			
			MIN	TYP[1]	MAX	
V_{OL}	LOW level output voltage	V_{CC} = 1.8 to 3.6V; $V_I = V_{IH}$ or V_{IL}; I_O = 100μA		GND	0.20	V
		V_{CC} = 1.8V; $V_I = V_{IH}$ or V_{IL}; I_O = 6mA		0.09	0.30	
		V_{CC} = 2.3V; $V_I = V_{IH}$ or V_{IL}; I_O = 6mA		0.07	0.20	
		V_{CC} = 2.3V; $V_I = V_{IH}$ or V_{IL}; I_O = 12mA		0.15	0.40	
		V_{CC} = 2.3V; $V_I = V_{IH}$ or V_{IL}; I_O = 12mA		0.23	0.60	
		V_{CC} = 2.7V; $V_I = V_{IH}$ or V_{IL}; I_O = 12mA		0.14	0.40	
		V_{CC} = 3.0V; $V_I = V_{IH}$ or V_{IL}; I_O = 24mA		0.27	0.55	
I_I	Input leakage current per control pin	V_{CC} = 1.8 to 3.6V; V_I = 5.5V or GND		0.1	5	μA
	Input leakage current per data pin	V_{CC} = 1.8 to 3.6V; $V_I = V_{CC}$ or GND		0.1	5	
I_{IHZ}/I_{ILZ}	Input current for common I/O pins	V_{CC} = 1.8 to 2.7V; $V_I = V_{CC}$ or GND		0.1	10	μA
		V_{CC} = 3.6V; $V_I = V_{CC}$ or GND		0.1	15	
I_{OZ}	3-State output OFF-state current	V_{CC} = 1.8 to 2.7V; $V_I = V_{IH}$ or V_{IL}; $V_O = V_{CC}$ or GND		0.1	5	μA
		V_{CC} = 2.7 to 3.6V; $V_I = V_{IH}$ or V_{IL}; $V_O = V_{CC}$ or GND		0.1	10	μA
I_{CC}	Quiescent supply current	V_{CC} = 1.8 to 2.7V; $V_I = V_{CC}$ or GND; I_O = 0		0.1	20	μA
		V_{CC} = 2.7 to 3.6V; $V_I = V_{CC}$ or GND; I_O = 0		0.2	40	
ΔI_{CC}	Additional quiescent supply current given per control pin	V_{CC} = 2.7V to 3.6V; $V_I = V_{CC}$ – 0.6V; I_O = 0		5	500	μA
	Additional quiescent supply current given per data I/O pin			150	750	
I_{BHL}[2]	Bus hold LOW sustaining current	V_{CC} = 2.3V; V_I = 0.7V	45	–		μA
		V_{CC} = 3.0V; V_I = 0.8V	75	150		
I_{BHH}[2]	Bus hold HIGH sustaining current	V_{CC} = 2.3V; V_I = 1.7V	–45			μA
		V_{CC} = 3.0V; V_I = 2.0V	–75	–175		
I_{BHLO}[2]	Bus hold LOW overdrive current	V_{CC} = 2.7V	300			μA
		V_{CC} = 3.6V	450			
I_{BHHO}[2]	Bus hold HIGH overdrive current	V_{CC} = 2.7V	–300			μA
		V_{CC} = 3.6V	–450			

NOTES:
1. All typical values are at T_{amb} = 25°C.
2. Valid for data inputs of bus hold parts.

AC CHARACTERISTICS FOR V_{CC} = 2.3V TO 2.7V RANGE AND V_{CC} < 2.3V

GND = 0V; $t_r = t_f \leq 2.0$ns; C_L = 30pF

SYMBOL	PARAMETER	WAVEFORM	LIMITS							UNIT
			V_{CC} = 2.3 to 2.7V			V_{CC} = 1.8V			V_{CC} = 1.2V	
			MIN	TYP[1, 2]	MAX	MIN	TYP[1]	MAX	TYP1	
t_{PHL}/t_{PLH}	Propagation delay nCP to nQn	1, 4	1.0	2.3	4.3	1.5	3.6	6.5	7.7	ns
t_{PZH}/t_{PZL}	3-State output enable time $n\overline{OE}$ to nQn	2, 4	1.0	2.6	4.8	1.5	4.0	7.2	8.7	ns
t_{PHZ}/t_{PLZ}	3-State output disable time $n\overline{OE}$ to nQn	2, 4	1.0	2.1	4.0	1.5	3.1	5.4	6.2	ns
t_W	nCP pulse width HIGH or LOW	1	3.0	1.6	–	4.0	2.0	–	–	ns
t_{su}	Set-up time Dn to nCP	3	1.2	0.2	–	1.5	0.2	–	–	ns
t_h	Hold time Dn to nCP	3	0.8	–0.1	–	0.6	–0.2	–	–	ns
f_{max}	Maximum clock pulse frequency	1	150	300	–	125	250	–	–	MHz

NOTES:
1. All typical values are measured at T_{amb} = 25°C.
2. Typical value is measured at V_{CC} = 2.5V.

AC CHARACTERISTICS FOR V_{CC} = 3.0V TO 3.6V RANGE AND V_{CC} = 2.7V

GND = 0V; $t_r = t_f \leq 2.5$ns; C_L = 50pF

SYMBOL	PARAMETER	WAVEFORM	LIMITS						UNIT
			V_{CC} = 2.3 to 2.7V			V_{CC} = 2.7V			
			MIN	TYP[1, 2]	MAX	MIN	TYP[1]	MAX	
t_{PHL}/t_{PLH}	Propagation delay nCP to nQn	1, 4	1.0	2.4	3.4	1.0	2.3	3.8	ns
t_{PZH}/t_{PZL}	3-State output enable time $n\overline{OE}$ to nQn	2, 4	1.0	2.3	4.0	1.0	2.9	4.8	ns
t_{PHZ}/t_{PLZ}	3-State output disable time $n\overline{OE}$ to nQn	2, 4	1.0	2.6	4.1	1.0	2.9	4.5	ns
t_W	nCP pulse width HIGH or LOW	1	2.5	1.4	–	3.0	1.6	–	ns
t_{su}	Set-up time Dn to nCP	3	1.2	0.2	–	1.5	0.4	–	ns
t_h	Hold time Dn to nCP	3	0.8	0.0	–	0.6	–0.2	–	ns
f_{max}	Maximum clock pulse frequency	1	200	350	–	150	300	–	MHz

NOTES:
1. All typical values are measured at T_{amb} = 25°C.
2. Typical value is measured at V_{CC} = 3.3V.

AC WAVEFORMS FOR V_{CC} = 2.3V TO 2.7V AND V_{CC} < 2.3V RANGE

$V_M = 0.5\ V_{CC}$
$V_X = V_{OL} + 0.15V$
$V_Y = V_{OH} – 0.15V$
V_{OL} and V_{OH} are the typical output voltage drop that occur with the output load.
$V_I = V_{CC}$

AC WAVEFORMS FOR V_{CC} = 3.0V TO 3.6V AND V_{CC} = 2.7V RANGE

$V_M = 1.5\ V$
$V_X = V_{OL} + 0.3V$
$V_Y = V_{OH} – 0.3V$
V_{OL} and V_{OH} are the typical output voltage drop that occur with the output load.
$V_I = 2.7V$

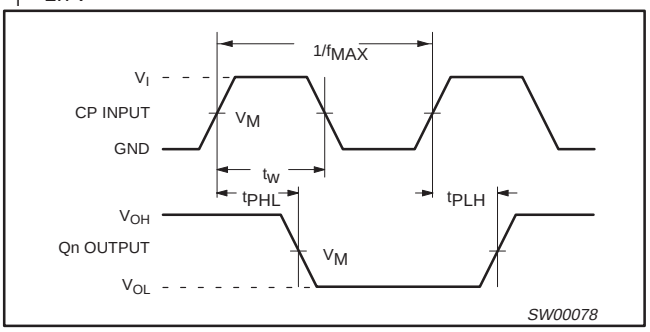

Waveform 1. Clock (CP) to output (Qn) propagation delays, the clock pulse width and the maximum clock pulse frequency

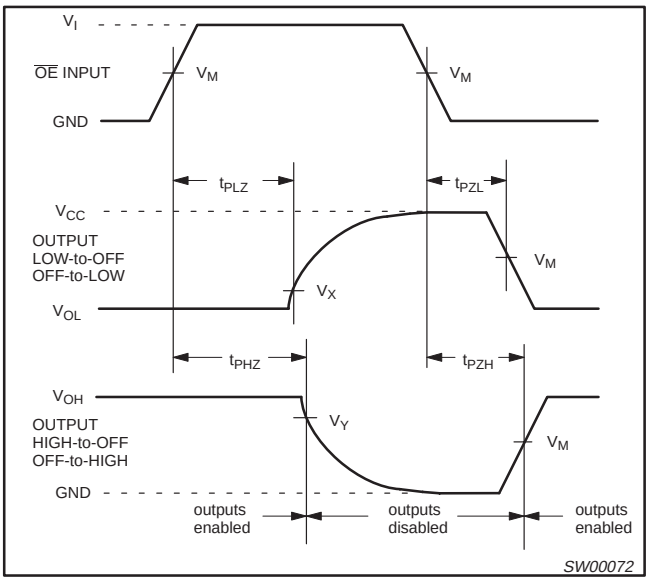

Waveform 2. 3-State enable and disable times

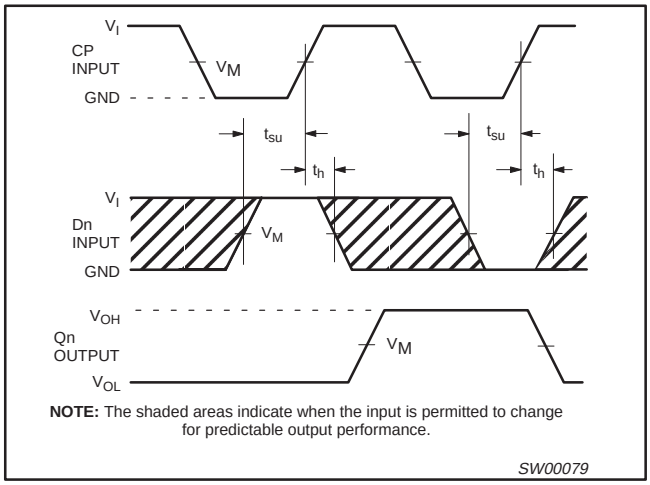

Waveform 3. Data set-up and hold times for the Dn input to the CP input

TEST CIRCUIT

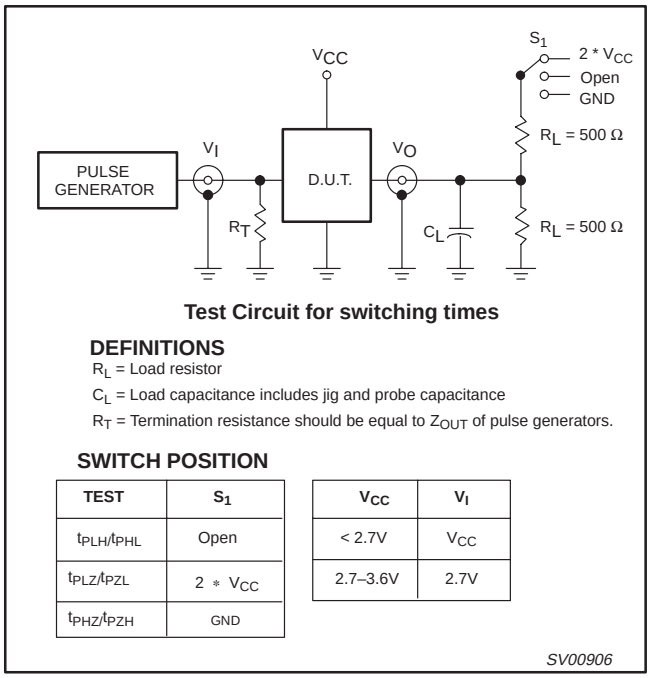

TEST	S_1
t_{PLH}/t_{PHL}	Open
t_{PLZ}/t_{PZL}	2 * V_{CC}
t_{PHZ}/t_{PZH}	GND

V_{CC}	V_I
< 2.7V	V_{CC}
2.7–3.6V	2.7V

Waveform 4. Load circuitry for switching times

SSOP48: plastic shrink small outline package; 48 leads; body width 7.5 mm **SOT370-1**

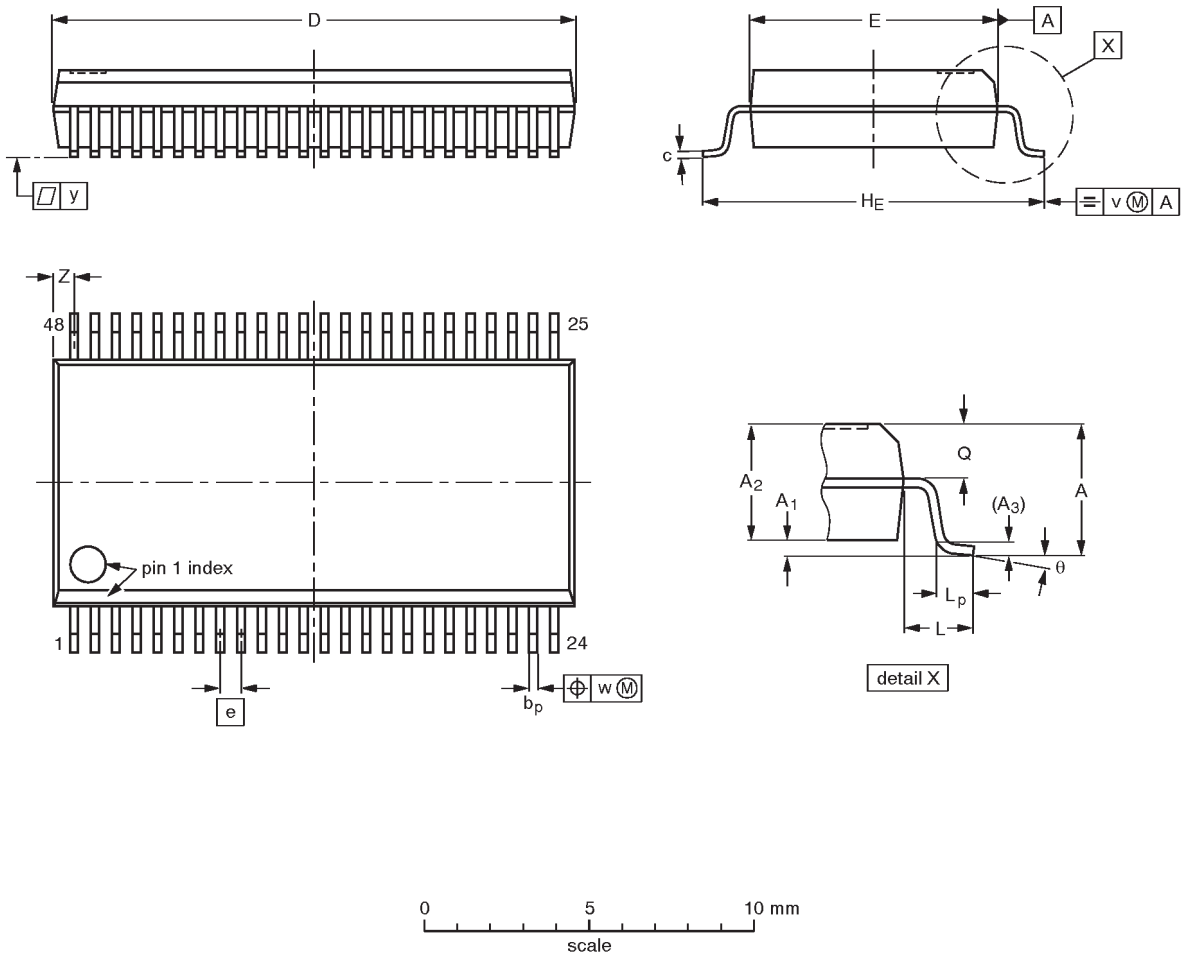

DIMENSIONS (mm are the original dimensions)

UNIT	A max.	A_1	A_2	A_3	b_p	c	D (1)	E (1)	e	H_E	L	L_p	Q	v	w	y	Z (1)	θ
mm	2.8	0.4 0.2	2.35 2.20	0.25	0.3 0.2	0.22 0.13	16.00 15.75	7.6 7.4	0.635	10.4 10.1	1.4	1.0 0.6	1.2 1.0	0.25	0.18	0.1	0.85 0.40	8° 0°

Note

1. Plastic or metal protrusions of 0.25 mm maximum per side are not included.

OUTLINE VERSION	REFERENCES				EUROPEAN PROJECTION	ISSUE DATE
	IEC	JEDEC	EIAJ			
SOT370-1		MO-118AA				~~93-11-02~~ 95-02-04

TSSOP48: plastic thin shrink small outline package; 48 leads; body width 6.1mm **SOT362-1**

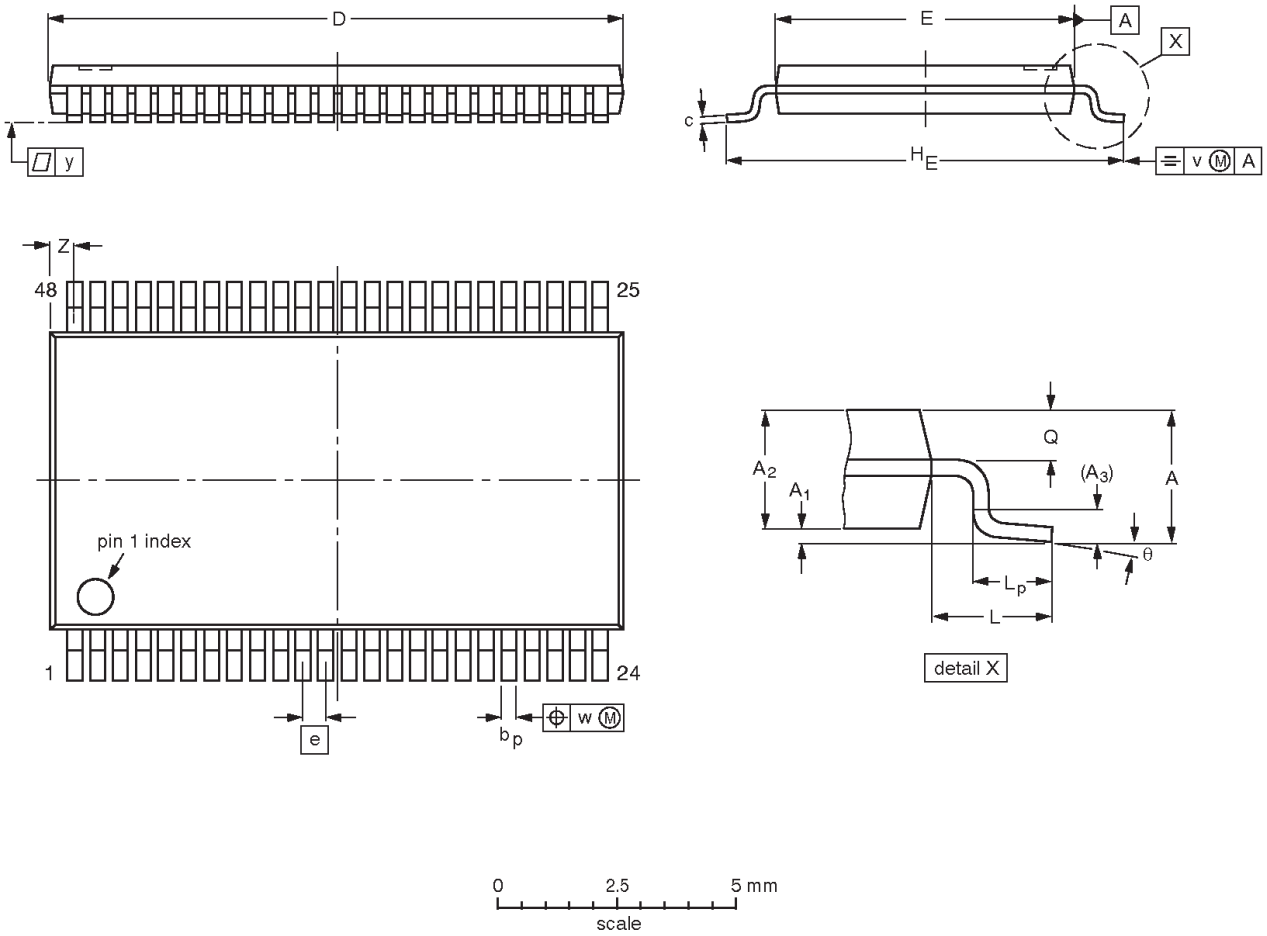

DIMENSIONS (mm are the original dimensions).

UNIT	A max.	A_1	A_2	A_3	b_p	c	D(1)	E(2)	e	H_E	L	L_p	Q	v	w	y	Z	θ
mm	1.2	0.15 0.05	1.05 0.85	0.25	0.28 0.17	0.2 0.1	12.6 12.4	6.2 6.0	0.5	8.3 7.9	1	0.8 0.4	0.50 0.35	0.25	0.08	0.1	0.8 0.4	8° 0°

Notes

1. Plastic or metal protrusions of 0.15 mm maximum per side are not included.
2. Plastic interlead protrusions of 0.25 mm maximum per side are not included.

OUTLINE VERSION	REFERENCES					EUROPEAN PROJECTION	ISSUE DATE
	IEC	JEDEC	EIAJ				
SOT362-1		MO-153ED					~~93-02-03~~ 95-02-10

NOTES

DEFINITIONS

Data Sheet Identification	Product Status	Definition
Objective Specification	Formative or in Design	This data sheet contains the design target or goal specifications for product development. Specifications may change in any manner without notice.
Preliminary Specification	Preproduction Product	This data sheet contains preliminary data, and supplementary data will be published at a later date. Philips Semiconductors reserves the right to make changes at any time without notice in order to improve design and supply the best possible product.
Product Specification	Full Production	This data sheet contains Final Specifications. Philips Semiconductors reserves the right to make changes at any time without notice, in order to improve design and supply the best possible product.

Philips Semiconductors and Philips Electronics North America Corporation reserve the right to make changes, without notice, in the products, including circuits, standard cells, and/or software, described or contained herein in order to improve design and/or performance. Philips Semiconductors assumes no responsibility or liability for the use of any of these products, conveys no license or title under any patent, copyright, or mask work right to these products, and makes no representations or warranties that these products are free from patent, copyright, or mask work right infringement, unless otherwise specified. Applications that are described herein for any of these products are for illustrative purposes only. Philips Semiconductors makes no representation or warranty that such applications will be suitable for the specified use without further testing or modification.

LIFE SUPPORT APPLICATIONS
Philips Semiconductors and Philips Electronics North America Corporation Products are not designed for use in life support appliances, devices, or systems where malfunction of a Philips Semiconductors and Philips Electronics North America Corporation Product can reasonably be expected to result in a personal injury. Philips Semiconductors and Philips Electronics North America Corporation customers using or selling Philips Semiconductors and Philips Electronics North America Corporation Products for use in such applications do so at their own risk and agree to fully indemnify Philips Semiconductors and Philips Electronics North America Corporation for any damages resulting from such improper use or sale.

Philips Semiconductors
811 East Arques Avenue
P.O. Box 3409
Sunnyvale, California 94088–3409
Telephone 800-234-7381

© Copyright Philips Electronics North America Corporation 1998
All rights reserved. Printed in U.S.A.

Date of release: 06-98

Document order number: 9397-750-04542

Let's make things better.

Philips Semiconductors

PHILIPS

НИОКР СИСТЕМС

ООО «НИОКРсистемс» - это оперативные поставки широкого спектра электронных компонентов отечественного и импортного производства напрямую от производителей и с крупнейших мировых складов. Реализуемая нашей компанией продукция насчитывает более полумиллиона наименований.

Благодаря этому наша компания предлагает к поставке практически не ограниченный ассортимент компонентов как оптовыми, мелкооптовыми партиями, так и в розницу.

Благодаря развитой сети поставщиков, помогаем в поиске и приобретении экзотичных или снятых с производства компонентов.

Наша компания это:

- Гарантия качества поставляемой продукции
- Широкий ассортимент
- Минимальные сроки поставок
- Техническая поддержка
- Подбор комплектации
- Индивидуальный подход
- Гибкое ценообразование
- Работаем по 275 ФЗ

ООО «НИОКР СИТЕМС»
Москва, 125362, Россия, ул. Вишневая, д. 9, к. 1, Блок 104 а и 104 в

Телефон: 8 (495) 268-14-82
Email: n@nsistems.ru

ИНН: 7735154786
ОГРН: 1167746717709