Cable glands

The European Technical Standard DIN EN 50 262

Metric cable glands for electric installations - the end of the PG–Cable glands threads.

- The technical standards “Cable Glands for cables and conductors with PG standard threads” DIN 46320 (P1 - P4), DIN 46255, DIN 46259, DIN 46319 and DIN VDE 0619 became invalid on the 31 December 1999.
- Cable glands with PG threads are no longer standard.
- The design approvals granted in accordance with DIN VDE 0619: 1987 – 09 remained valid until 31.3.2001.
- The European Standard “Metric Cable Glands for Electrical Installations” EN 50 262 became valid on 1.4.1999.
- The EN Standard EN 50 262 is mandatory in all member countries of the European Union (EU) and associated countries collaborating with CENELEC (European Committee For Electrotechnical Standardization) who adopt the standard.
- That means that only metric cable glands are permitted to be used in new constructions as of 1.3.2001 in those countries described above.

We offer cable glands as a well balanced assortment for different applications.

- Cable glands made from plastic and brass
- EMC cable glands
- For hazardous areas in accordance with EN 50014, EN 50019 and ATEX
- VDE, CSA and UL approved

Cable entries, for example for enclosures or heavy duty connectors can be easily and reliably installed.

DIN 40050 protection classes:

IP 54 Protection against dust accumulation as well as protection against water splash

IP 65 Protection against dust inflow as well as protection against hose water

IP 66 Protection against dust inflow as well as protection in the case of overflooding

IP 68 Protection against dust inflow as well as protection when submerging

IP 69 Protection against water under pressure

Labelling of explosion protected electric equipment according to ‘old’ Ex approvals.

Name of manufacturer or logo	Type designation from manufacturer	Examination certificate number of EU test site	Symbol for electrical equipment certified by EU test site	Conformity to european standards certified	Risk of explosion	Abbreviation of protection classes used	Group of electrical devices
	16		Ex ATEX	E	Ex	e i	II

Labeling of devices and protection systems according ATEX

The following information must be clearly and permanently readable on every device and protection system:
Example:

Name of manufacturer or logo	Type/size designation from manufacturer	Number of EU-type-examination test certificate EU test site	Symbol of protection from explosion	Symbol of device group and category	Conformity to european standards certified	Risk of explosion	Abbreviation of applied type of protection classes	Device group
			Ex	II 2 G	E	EX	e ia	II

Cable glands with metric connection thread

With the taking of effect of European standard EN 50 262 – metric cable glands for electric installation – the Europe-wide introduction of the metric ISO fine thread in cable glands took place on 01.01.2000.
The EN 60 423 standard lists the individual thread sizes. The previously-known thread sizes PG 7 to PG 48 (10 sizes) were replaced by the metric sizes M 12 to M 63 (8 sizes). This catalogue contains a large selection of metric cable glands Ex cables and cable entries for use in hazardous areas.

Cable glands

Cable glands

Criteria for the selection of cable glands Type ADE

- Define the installation area, in which you want to use the glands
- Define the cable types to determine the requested functions
- Check the dimensions of the outer cable sheath
- Check the size and type of reinforcement
- Check the dimensions of the inner cable sheath
- Check the dimensions of the lead sheath
- Determine the environmental condition
- Check the accessories

Installation instructions for endangered areas in accordance with the Standards CENELEC EN 50014 - 50018 - 50019

- Increased safety to Standard EN 50019; direct thread insertion into the enclosure or with a lock nut.
  Unused insertions have to be closed with a certified stopping plug.

- Flame protected in accordance with EN 50018; direct thread insertion into the enclosure with five full pitches (approx. 8 mm);
  Unused insertion have to be closed with a certified stopping plug.

Armoured cable

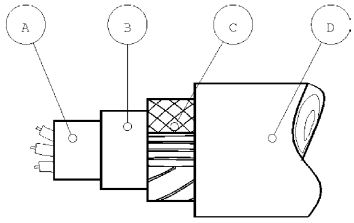

A: Inner sheath
B: Lead sheath
C: Armouring (steel strip / SWA / braided)
D: Outer sheath

Non-armoured cable

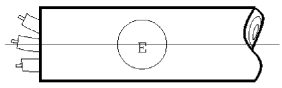

E: Outer sheath

Cable glands for armoured cable

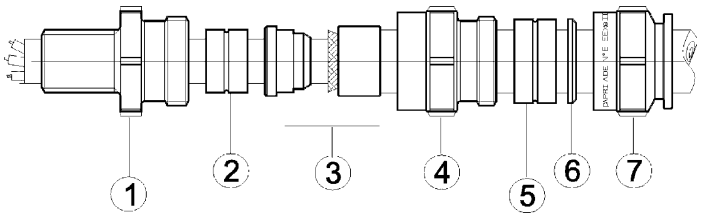

1: Gland
2: Sealing washer for inner cable sheath
3: Clamping module / Earthing of armouring
4: Base
5: Sealing washer for outer cable sheath
6: Washers
7: Union nut

Cable glands for non-armoured cable

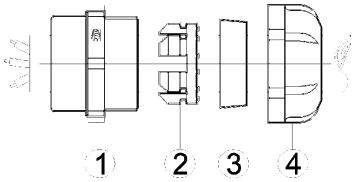

1: Gland
2: Clamping module
3: Sealing washer
4: Union nut

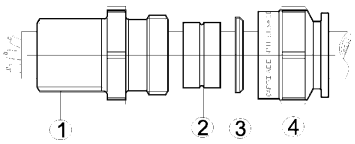

1: Gland
2: Sealing washer
3: Washer
4: Union nut

Cable glands

Plastic IP54

Reasonably priced cable glands IP 54

Technical data

Material:	Polyamide connection thread M
	Polystyrene connection thread PG
Sealing:	Soft rubber
Temperature:	-20°C ... +60°C
Protection class:	IP54 (with thread sealing ring type GWDR ...-PO = IP65)
Colour:	similar grey RAL 7035

Ordering data

Type	Thread	Clamp range	L	L1	SW1/SW2	Qty.	Cat. No.
Metric gland plastic IP54							
VGM12-K54	M 12 x 1.5	6.0 - 8.0	32	11	19/16	50	**1777080000**
VGM16-K54	M 16 x 1.5	8.0 - 10.0	32	11	19/16	50	**1777070000**
VGM20-K54	M 20 x 1.5	8.0 - 10.0	35	11	22/19	50	**1777050000**
VGM25-K54	M 25 x 1.5	12.0 - 14.0	39	11	27/23	50	**1777030000**
VGM25-K54	M 25 x 1.5	15.0 - 17.0	39	11	27/23	50	**1778830000**
VGM32-K54	M 32 x 1.5	24.0 - 26.0	44.50	11	42/40	25	**1777020000**
VGM40-K54	M 40 x 1.5	28.0 - 30.0	44.50	11	42/40	25	**1777010000**
VGM50-K54	M 50 x 1.5	31.0 - 33.0	53	11	53/50	10	**1776990000**
VGM63-K54	M 63 x 1.5	45.0 - 47.0	58	11	65/60	10	**1776980000**
PG gland plastic IP54							
VG 7-K54	PG 7	5.0 - 7.0	28	8	15/13	50	**0521560000**
VG 9-K54	PG 9	6.0 - 8.0	29	8	19/17	50	**0261560000**
VG 11-K54	PG 11	8.0 - 10.0	32	8	22/19	50	**0260760000**
VG 13.5-K54	PG 13.5	10.0 - 12.0	34	9	24/21	50	**0260860000**
VG 16-K54	PG 16	12.0 - 14.0	38	10	27/23	25	**0261460000**
VG 21-K54	PG 21	15.0 - 17.0	43.5	11	32/30	20	**0260960000**
VG 29-K54	PG 29	24.0 - 26.0	44.5	11	42/40	20	**0261060000**
VG 36-K54	PG 36	31.0 - 33.0	55	13	53/50	10	**0497660000**
VG 42-K54	PG 42	39.0 - 40.0	60	13	60/55	10	**0497760000**
VG 48-K54	PG 48	45.0 - 47.0	61	14	65/60	5	**1718760000**

all sizes in mm

Plastic IP68

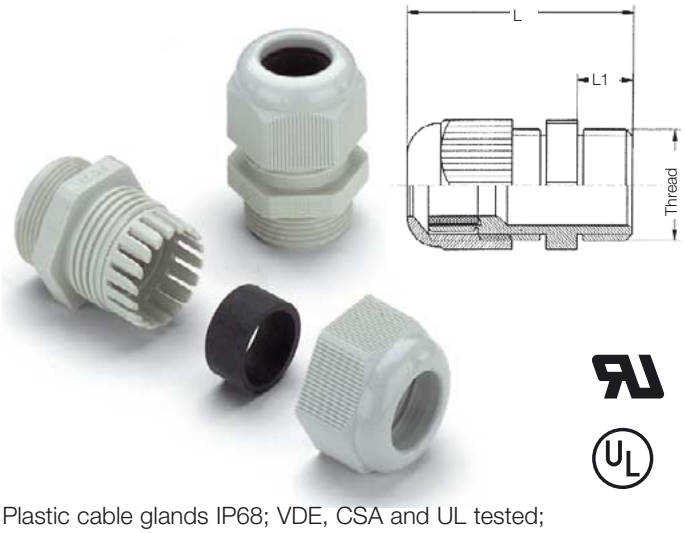

Plastic cable glands IP68; VDE, CSA and UL tested; halogene-free.

EN 50262: metric

Technical data

Material:	Polyamide
Sealing:	Neoprene
Temperature:	-40°C ... +70°C (peak +100°C)
Protection class:	IP68 / 5 bar in the stated clamping range with GWDR
Colour:	similar grey RAL 7035

Ordering data

Type	Thread	Clamp range	L	L1	SW	Qty.	Cat. No.
Metric gland plastic		**Approval: VDE**					
VG M 12 - K 68	M 12 x 1.5	3.0 - 6.5	31	8	15	50	**1772280000**
VG M 16 - K 68	M 16 x 1.5	5.0 - 10.0	35	10	22	50	**1772290000**
VG M 20 - K 68	M 20 x 1.5	6.0 - 12.0	43	10	24	50	**1772300000**
VG M 25 - K 68	M 25 x 1.5	13.0 - 18.0	48	10	33	25	**1772310000**
VG M 32 - K 68	M 32 x 1.5	18.0 - 25.0	61	15	42	20	**1772320000**
VG M 40 - K 68	M 40 x 1.5	22.0 - 32.0	72	15	53	20	**1772330000**
VG M 50 - K 68	M 50 x 1.5	30.0 - 38.0	74	18	60	10	**1772340000**
VG M 63 - K 68	M 63 x 1.5	34.0 - 44.0	75	18	65	5	**1772350000**
PG gland plastic		**Approval: VDE/UL**					
VG 7-K68	PG 7	3.0 - 6.5	30.5	8.0	15	50	**1568970000**
VG 9-K68	PG 9	4.0 - 8.0	34	8.0	19	50	**1568980000**
VG 11-K68	PG 11	5.0 - 10.0	37	8.0	22	50	**1568990000**
VG 13.5-K68	PG 13.5	6.0 - 12.0	39	9.0	24	50	**1569000000**
VG 16-K68	PG 16	10.0 - 14.0	42.5	10.0	27	25	**1569010000**
VG 21-K68	PG 21	13.0 - 18.0	48	11.0	33	20	**1569020000**
VG 29-K68	PG 29	18.0 - 25.0	53	11.0	42	20	**1569030000**
VG 36-K68	PG 36	22.0 - 32.0	65	13.0	53	10	**1569040000**
VG 42-K68	PG 42	30.0 - 38.0	68	13.0	60	10	**1569050000**
VG 48-K68	PG 48	34.0 - 44.0	69	14.0	65	5	**1718770000**
NPT gland plastic		**Approval: UL/CSA**					
VG NPT 3/8" 5-10-K 68	NPT 3/8"	5.0 - 10.0	42	15	22	50	**1772520000**
VG NPT 1/2" 6-12-K 68	NPT 1/2"	6.0 - 12.0	42	15	24	50	**1772550000**
VG NPT 1/2" 10-14-K 68	NPT 1/2"	10.0 - 14.0	45	15	27	25	**1772560000**
VG NPT 3/4" 13-18-K 68	NPT 3/4"	13.0 - 18.0	46	15	33	20	**1772590000**
VG NPT 1" 18-25-K 68	NPT 1"	18.0 - 25.0	60	18	42	20	**1772600000**

all sizes in mm

Cable glands

Cable glands brass IP54

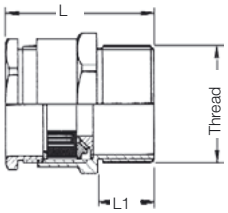

Brass cable gland with hexagon threaded glands

Cable glands brass IP68

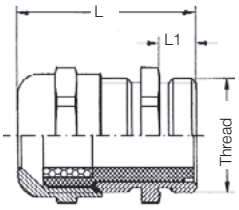

Brass cable gland IP68 with strain relief.

Reduced clamping range on request.

Multiple seal insert on request.

Technical data

Material:	Nickel plated brass
Sealing:	Soft rubber
Temperature:	-20°C ... +60°C
Protection class:	IP54 (with thread sealing ring Type GWDR ...-PO = IP65)

Ordering data

Type	Thread	Clamp range	L	L1	SW1/SW2	Qty.	Cat. No.
Metric gland brass IP 54, hexagonal							
VGM12-MS54	M 12 x 1.5	5.0 - 7.0	21.50	6	14/13	100	**1778410000**
VGM12-MS54	M 12 x 1.5	6.0 - 8.0	22	6	17/15	100	**1778400000**
VGM16-MS54	M 16 x 1.5	8.0 - 10.0	26	6	20/18	100	**1778390000**
VGM20-MS54	M 20 x 1.5	8.0 - 10.0	26.50	6.50	22/18	50	**1778380000**
VGM20-MS54	M 20 x 1.5	10.0 - 12.0	26.50	6.50	22/20	50	**1778370000**
VGM25-MS54	M 25 x 1.5	12.0 - 14.0	27.50	7	27/22	50	**1778360000**
VGM25-MS54	M 25 x 1.5	15.0 - 17.0	29.50	7	30/28	50	**1778350000**
VGM32-MS54	M 32 x 1.5	24.0 - 26.0	33	8	40/38	25	**1778340000**
VGM40-MS54	M 40 x 1.5	28.0 - 30.0	33	8	43/37	25	**1778330000**
VGM50-MS54	M 50 x 1.5	31.0 - 33.0	39	9	55/47	10	**1778320000**
VGM50-MS54	M 50 x 1.5	39.0 - 41.0	43	9	57/54	5	**1778310000**
VGM63-MS54	M 63 x 1.5	45.0 - 47.0	45	10	68/60	5	**1778300000**
PG gland brass IP 54, hexagonal							
VG 7-MS54	PG 7	5.0 - 7.0	20.5	5	14/13	50	**0521500000**
VG 9-MS54	PG 9	6.0 - 8.0	22	6	17/15	50	**0261500000**
VG 11-MS54	PG 11	8.0 - 10.0	26	6	20/18	50	**0260700000**
VG 13.5-MS54	PG 13.5	10.0 - 12.0	26	6.5	22/20	50	**0260800000**
VG 16-MS54	PG 16	12.0 - 14.0	27	6.5	24/22	25	**0261400000**
VG 21-MS54	PG 21	15.0 - 17.0	29.5	7	30/28	20	**0260900000**
VG 29-MS54	PG 29	24.0 - 26.0	33	8	40/37	20	**0261000000**
VG 36-MS54	PG 36	33.0 - 35.0	39	9	50/47	10	**0497600000**
VG 42-MS54	PG 42	41.0 - 43.0	44	10	57/54	10	**0497700000**
VG 48-MS54	PG 48	45.0 - 47.0	45	10	64/60	5	**1718780000**

all sizes in mm

Technical data

Material:	Nickel plated brass
Sealing:	Neoprene
Temperature:	-40°C ... +70°C (peak +100°C)
Protection class:	IP 68 / 5 bar with GWDR in the clamping area

Ordering data

Type	Thread	Clamp range	L	L1	SW	Qty.	Cat. No.
Metric gland brass							
VG M 12 - MS 68	M 12 x 1.5	3.0 - 6.5	24	5	14	50	**1772200000**
VG M 16 - MS 68	M 16 x 1.5	5.5 - 10.0	28	5.5	17	50	**1772210000**
VG M 20 - MS 68	M 20 x 1.5	8.0 - 13.0	32	6	22	50	**1772220000**
VG M 25 - MS 68	M 25 x 1.5	11.0 - 18.0	35	7	30	20	**1772230000**
VG M 32 - MS 68	M 32 x 1.5	15.0 - 21.0	39	8	34	20	**1772240000**
VG M 40 - MS 68	M 40 x 1.5	19.0 - 27.0	53	8	44	10	**1772250000**
VG M 50 - MS 68	M 50 x 1.5	26.0 - 35.0	55	9	55	10	**1772260000**
VG M 63 - MS 68	M 63 x 1.5	34.0 - 45.0	58	10	66	5	**1772270000**
PG gland brass IP 68							
VG 7-MS68	PG 7	3.0 - 6.5	23	5	14	50	**1569060000**
VG 9-MS68	PG 9	4.0 - 10.0	27	6	17	50	**1569070000**
VG 11-MS68	PG 11	5.0 - 10.0	28.5	6	20	50	**1569080000**
VG 13.5-MS68	PG 13.5	6.0 - 12.0	29.5	6.5	22	50	**1569090000**
VG 16-MS68	PG 16	10.0 - 14.0	29.5	6.5	24	25	**1569100000**
VG 21-MS68	PG 21	13.0 - 18.0	33.5	7	30	20	**1569110000**
VG 29-MS68	PG 29	18.0 - 25.0	37.5	8	40	20	**1569120000**
VG 36-MS68	PG 36	22.0 - 32.0	45	9	50	10	**1569130000**
VG 42-MS68	PG 42	30.0 - 38.0	47.5	10	57	10	**1569140000**
VG 48-MS68	PG 48	34.0 - 44.0	50.5	10	64	5	**1718790000**
NPT gland brass							
VG NPT 3/8" - MS 68NPT 3/8"		4.0 - 8.0	36	15	17	50	**1772370000**
VG NPT 1/2" - MS 68NPT 1/2"		6.0 - 12.0	36	13	22	50	**1772380000**
VG NPT 3/4" - MS 68NPT 3/4"		13.0 - 18.0	39	13	30	20	**1772390000**

all sizes in mm

Cable glands

Plastic cable glands with bending protection

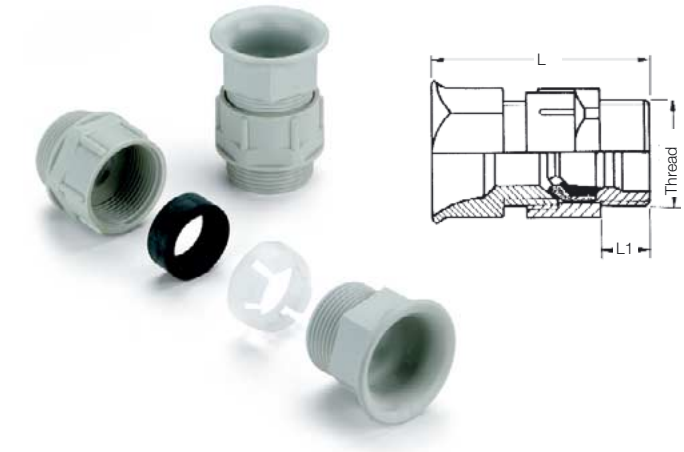

Cable gland with bending protection and internal strain relief.Clamping profile made of Hostaform C.

Technical data

Material:	Polyamide, glass fibre reinforced
Sealing:	Soft rubber
Temperature:	-10°C...+80°C
Protection class:	IP 65
Colour:	similar Grey RAL 7035

Ordering data

Type	Thread	Clamp range	L	L1	SW	Qty.	Cat. No.
Metric KV cable gland plastic bending protection							
VGM12-K65 BS	M 12 x 1.5	6.0 - 8.0	40	11	19	50	**1778750000**
VGM16-K65 BS	M 16 x 1.5	6.0 - 8.0	40	11	19	50	**1778760000**
VGM20-K65 BS	M 20 x 1.5	8.0 - 10.0	45	11	22	50	**1778770000**
VGM20-K65 BS	M 20 x 1.5	10.0 - 12.0	57	11	24	50	**1778780000**
VGM25-K65 BS	M 25 x 1.5	12.0 - 14.0	51	11	27	50	**1778790000**
VGM25-K65 BS	M 25 x 1.5	14.0 - 18.0	53	11	33	25	**1778800000**
VGM32-K65 BS	M 32 x 1.5	18.0 - 24.0	60	11	42	25	**1778810000**
PG-KV plastic bending protection							
VG 7-K65 BS	PG 7	4.0 - 6.0	36	8	15	50	**1720400000**
VG 9-K65 BS	PG 9	6.0 - 8.0	37	8	19	50	**1720410000**
VG 11-K65 BS	PG 11	8.0 - 10.0	42	8	22	50	**1720420000**
VG 13.5-K65 BS	PG 13.5	10.0 - 12.0	45	9	24	50	**1720430000**
VG 16-K65 BS	PG 16	12.0 - 14.0	50	10	27	25	**1720440000**
VG 21-K65 BS	PG 21	14.0 - 18.0	53	11	32	20	**1720450000**
VG 29-K65 BS	PG 29	18.0 - 24.0	60	11	42	20	**1720460000**

all sizes in mm

Cable glands brass with bending protection

Cable gland with bending protection and internal strain relief. Without external strain relief clamp. Clamping profile made of Hostaform C.

Technical data

Material:	Nickel plated brass
Sealing:	Soft rubber
Temperature:	-10°C...+80°C
Protection class:	IP 65

Ordering data

Type	Thread	Clamp range	L	L1	SW1/SW2	Qty.	Cat. No.
PG-KV cable gland Brass bending protection							
VG 9-MS65 BS	PG 9	6.0 - 8.0	35	6	19/15	50	**1720340000**
VG 11-MS65 BS	PG 11	8.0 - 10.0	35	6	22/19	50	**1720350000**
VG 13.5-MS65 BS	PG 13.5	10.0 - 12.0	36	6.5	24/20	50	**1720360000**
VG 16-MS65 BS	PG 16	12.0 - 14.0	40	7	27/30	25	**1720370000**
VG 21-MS65 BS	PG 21	14.0 - 18.0	44	7	32/34	20	**1720380000**
VG 29-MS65 BS	PG 29	18.0 - 24.0	50	8	41/46	20	**1720390000**

all sizes in mm

Cable glands

Cable glands brass IP54 with gripping jaw

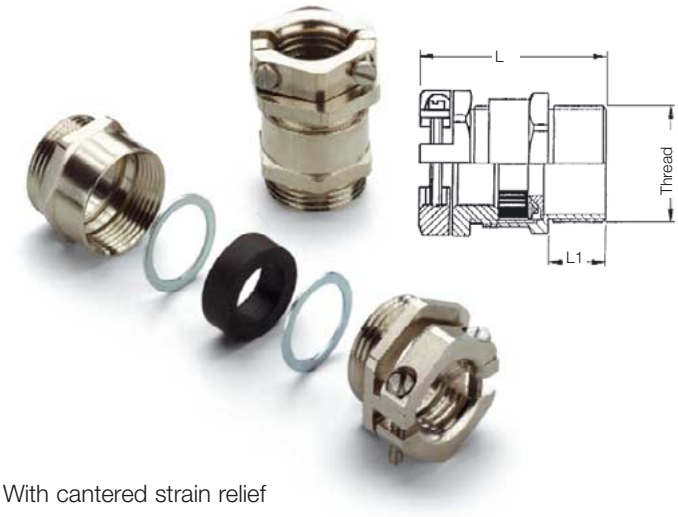

With cantered strain relief

Technical data

Material:	Nickel plated brass
Sealing:	Universal sealing ring neoprene
Temperature:	-30°C ... +90°C
Protection class:	IP54 (with thread sealing ring type GWDR ...-PO = IP65)

Ordering data

Type	Thread	Clamp range	L	L1	SW1/SW2	Qty.	Cat. No.
Metric gland brass IP 54, hexagonal							
VG M12-MS54ZE	M 12 x 1.5	5.0 - 7.0	21.50	6	14	100	**1778420000**
VG M12-MS54ZE	M 12 x 1.5	4.0 - 9.5	22	6	17	100	**1778430000**
VG M16-MS54ZE	M 16 x 1.5	4.0 - 9.5	26	6	18	100	**1778440000**
VG M20-MS54ZE	M 20 x 1.5	6.0 - 11.5	26.50	6.50	22	50	**1778450000**
VG M20-MS54ZE	M 20 x 1.5	6.0 - 13.5	26.50	6.50	22	50	**1778460000**
VG M25-MS54ZE	M 25 x 1.5	6.0 - 15.5	27.50	7	30	50	**1778470000**
VG M25-MS54ZE	M 25 x 1.5	9.0 - 21.5	29.50	7	30	50	**1778480000**
VG M32-MS54ZE	M 32 x 1.5	17.0 - 29.5	33	8	39	25	**1778490000**
VGM40-MS54ZE	M 40 x 1.5	17.0 - 29.5	33	8	43	25	**1778500000**
VG M50-MS54ZE	M 50 x 1.5	23.0 - 36.5	39	9	55	10	**1778510000**
VG M50-MS54ZE	M 50 x 1.5	29.0 - 42.5	43	9	57	5	**1778520000**
VG M63-MS54ZE	M 63 x 1.5	35.0 - 46.5	45	10	68	5	**1778530000**
PG gland brass IP 54, hexagonal							
VG 7-MS54-ZE	PG 7	5.0 - 7.0	27	5	14/16	50	**1718800000**
VG 9-MS54-ZE	PG 9	4.0 - 11.0	30.5	6	17/19	50	**1718810000**
VG 11-MS54-ZE	PG 11	6.0 - 13.0	31.5	6	20/22	50	**1718820000**
VG 13.5-MS54-ZE	PG 13.5	6.0 - 13.0	32	6.5	22/24	50	**1718830000**
VG 16-MS54-ZE	PG 16	6.0 - 16.0	33	6.5	24/27	25	**1718840000**
VG 21-MS54-ZE	PG 21	9.0 - 20.0	38	7	30/34	20	**1718850000**
VG 29-MS54-ZE	PG 29	17.0 - 28.0	43	8	40/42	20	**1718860000**
VG 36-MS54-ZE	PG 36	23.0 - 34.0	49.5	9	50/52	10	**1718870000**
VG 42-MS54-ZE	PG 42	29.0 - 40.0	53.5	10	57/62	10	**1718880000**
VG 48-MS54-ZE	PG 48	35.0 - 46.0	55	10	64/68	5	**1718890000**

all sizes in mm

Cable glands brass for Ex-areas

For use in hazardous areas. These cable glands are tested for higher safety specifications with certified conformity to approvals LCIE 97ATEX6005X.
Variant for EMC applications are available.

Technical data

Material:	Nickel plated brass
Sealing:	Neoprene
Temperature:	-20°C ... +100°C
Protection class:	IP66 (with thread sealing ring Type GWDR ...-NP = IP68/20 bar)
	ATEX certification available

Ordering data

Type	Thread	Clamp range	L	L1	SW	Qty.	Cat. No.
Metric gland brass-KV for Eex-e							
VG M 16-Exe MS	M 16 x 1.5	7.0 - 11.0	28	8	22	50	**1737210000**
VG M 20-Exe MS	M 20 x 1.5	8.5 - 13.0	28	8	24	50	**1737220000**
VG M 25-Exe MS	M 25 x 1.5	13.5 - 18.0	33	9	30	25	**1737230000**
VG M 32-Exe MS	M 32 x 1.5	17.5 - 25.0	38	10	41	20	**1737240000**
VG M 40-Exe MS	M 40 x 1.5	24.5 - 33.5	49	11	52	10	**1737250000**
VG M 50-Exe MS	M 50 x 1.5	33.0 - 43.0	54	12	63	5	**1737260000**
VG M 63-Exe MS	M 63 x 1.5	43.5 - 55.0	60	13	77	5	**1737270000**
PG gland brass-KV for Eex-e							
VG 7-Exe MS	PG 7	4.0 - 8.0	24	7	18	50	**1718990000**
VG 9-Exe MS	PG 9	6.0 - 11.0	28	8	22	50	**1719000000**
VG 11-Exe MS	PG 11	7.5 - 13.0	28	8	24	50	**1719010000**
VG 13.5-Exe MS	PG 13.5	7.5 - 13.0	32	8	24	50	**1719020000**
VG 16-Exe MS	PG 16	12.5 - 18.0	33	9	30	25	**1719030000**
VG 21-Exe MS	PG 21	17.5 - 23.5	38	10	41	20	**1719040000**
VG 29-Exe MS	PG 29	24.5 - 31.5	49	11	52	20	**1719050000**
VG 36-Exe MS	PG 36	33.0 - 40.5	54	12	63	10	**1719060000**
VG 42-Exe MS	PG 42	33.0 - 43.0	54	12	63	10	**1719070000**
VG 48-Exe MS	PG 48	42.5 - 52.5	60	13	77	5	**1719080000**
NPT brass KV for Eex-e							
VG NPT 1/2" Eex-e MS	NPT 1/2"	8.5 - 13.0	36	16	24	50	**1778160000**
VG NPT 3/4" Eex-e MS	NPT 3/4"	13.5 - 18.0	40	16	30	25	**1778150000**
VG NPT 1" Eex-e MS	NPT 1"	17.5 - 25.0	48	20	41	1	**1778140000**
VG NPT 1 1/4" Eex-e MS	NPT 1 1/4"	24.5 - 33.5	58	20	52	1	**1778130000**
VG NPT 1 1/2" Eex-e MS	NPT 1 1/2"	24.5 - 33.5	58	20	52	1	**1778120000**
VG NPT 2" Eex-e MS	NPT 2"	33.0 - 43.0	62	20	63	1	**1778110000**
VG NPT 2 1/2" Eex-e MS	NPT 2 1/2"	43.5 - 55.0	75	28	77	1	**1778090000**

all sizes in mm

Cable glands

Plastic cable glands for EExe-areas

For use in hazardous areas (EEX e II). These cable glands are tested for higher safety specifications with certified conformity to approvals LCIE 97ATEX6007X.
The clamping profile serves as an internal strain relief.
The sealing ring is constructed with a membrane against dust, which can be easily pierced.

Technical data

Material:	Polyamide
Sealing:	Santoprene
Temperature:	-40°C ... +90°C
Protection class:	IP66 (with thread sealing ring)
	Type GWDR ...-NP = IP68/5 bar)
	ATEX available
Colour:	similar Black RAL 9005

Ordering data

Type	Thread	Clamp range	L	L1	SW	Qty.	Cat. No.
Metric plastic cable glands for EExe-areas							
VG M 16-Exe SW	M 16 x 1.5	5.0 - 8.0	34	12	19	50	**1737280000**
VG M 20-Exe SW	M 20 x 1.5	8.0 - 13.0	35	12	24	50	**1737290000**
VG M 25-Exe SW	M 25 x 1.5	13.0 - 19.0	42	13	32	25	**1737300000**
VG M 32-Exe SW	M 32 x 1.5	17.0 - 25.0	44	15	41	20	**1737310000**
VG M 40-Exe SW	M 40 x 1.5	24.0 - 32.0	50	15	52	10	**1737320000**
VG M 50-Exe SW	M 50 x 1.5	29.0 - 38.0	56	16	59	5	**1737330000**
VG M 63-Exe SW	M 63 x 1.5	36.0 - 44.0	58	16	65	5	**1737340000**
PG plastic cable glands for EExe-areas							
VG 7-Exe SW	PG 7	3.5 - 6.0	27	9	15	50	**1569360000**
VG 9-Exe SW	PG 9	5.0 - 8.0	31	9	19	50	**1490500000**
VG 11-Exe SW	PG 11	6.0 - 10.0	31	9	22	50	**1490600000**
VG 13.5-Exe SW	PG 13.5	8.0 - 13.0	33	10	24	50	**1490700000**
VG 16-Exe SW	PG 16	10.0 - 15.0	33	10	26	25	**1490800000**
VG 21-Exe SW	PG 21	13.0 - 19.0	40	11	32	20	**1490900000**
VG 29-Exe SW	PG 29	17.0 - 25.0	41	12	41	20	**1491000000**
VG 36-Exe SW	PG 36	24.0 - 32.0	49	14	52	10	**1491100000**
VG 42-Exe SW	PG 42	28.0 - 38.0	56	16	59	10	**1491200000**
VG 48-Exe SW	PG 48	34.0 - 44.0	60	16	65	5	**1718970000**

all sizes in mm

Plastic cable glands for EExi-areas

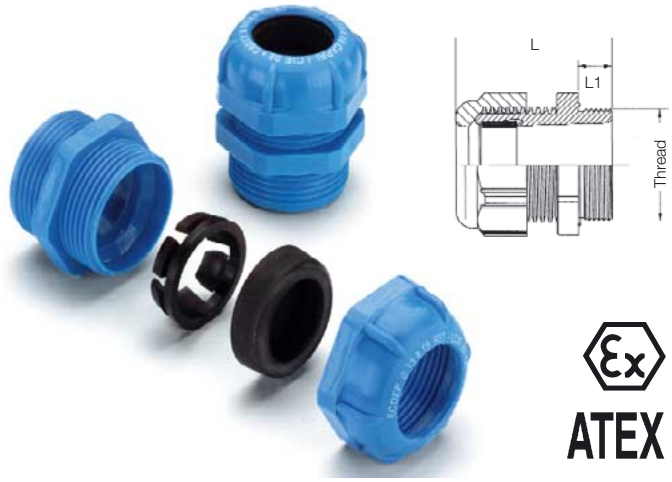

For use in explosion endangered areas (EEX i). These cable glands are tested for higher safety specifications with certified conformity to approvals LCIE 97ATEX6007X. The clamping profile is used as an internal strain relief. The sealing ring is constructed with a membrane against dust, which can be easily pierced.

Technical data

Material:	Polyamide
Sealing:	Santoprene
Temperature:	-40°C ... +90°C
Protection class:	IP66 (with thread sealing ring)
	Type GWDR ...-NP = IP68/5 bar)
	ATEX granted
Colour:	similar Blue RAL 5012

Ordering data

Type	Thread	Clamp range	L	L1	SW	Qty.	Cat. No.
PG plastic cable glands for EExi-areas							
VG M 16-Exi BL	M 16 x 1.5	5.0 - 8.0	34	12	19	50	**1737350000**
VG M 20-Exi BL	M 20 x 1.5	8.0 - 13.0	35	12	24	50	**1737360000**
VG M 25-Exi BL	M 25 x 1.5	13.0 - 19.0	42	13	32	25	**1737370000**
VG M 32-Exi BL	M 32 x 1.5	17.0 - 25.0	44	15	41	20	**1737380000**
VG M 40-Exi BL	M 40 x 1.5	24.0 - 32.0	50	15	52	10	**1737390000**
VG M 50-Exi BL	M 50 x 1.5	29.0 - 38.0	56	16	59	5	**1737400000**
VG M 63-Exi BL	M 63 x 1.5	36.0 - 44.0	58	16	67/65	5	**1737410000**
PG plastic cable glands for EExi-areas							
VG 7-Exi BL	PG 7	3.5 - 6.0	27	9	15	50	**1569370000**
VG 9-Exi BL	PG 9	5.0 - 8.0	31	9	19	50	**1491300000**
VG 11-Exi BL	PG 11	6.0 - 10.0	31	9	22	50	**1491400000**
VG 13.5-Exi BL	PG 13.5	8.0 - 13.0	33	10	24	50	**1491500000**
VG 16-Exi BL	PG 16	10.0 - 15.0	33	10	26	25	**1491600000**
VG 21-Exi BL	PG 21	13.0 - 19.0	40	11	32	20	**1491700000**
VG 29-Exi BL	PG 29	17.0 - 25.0	41	12	41	20	**1491800000**
VG 36-Exi BL	PG 36	24.0 - 32.0	49	14	52	10	**1491900000**
VG 42-Exi BL	PG 42	28.0 - 38.0	56	16	59	10	**1492000000**
VG 48-Exi BL	PG 48	34.0 - 44.0	60	16	65	5	**1718980000**

all sizes in mm

Cable glands

Plastic cable glands with strain relief spiral cap

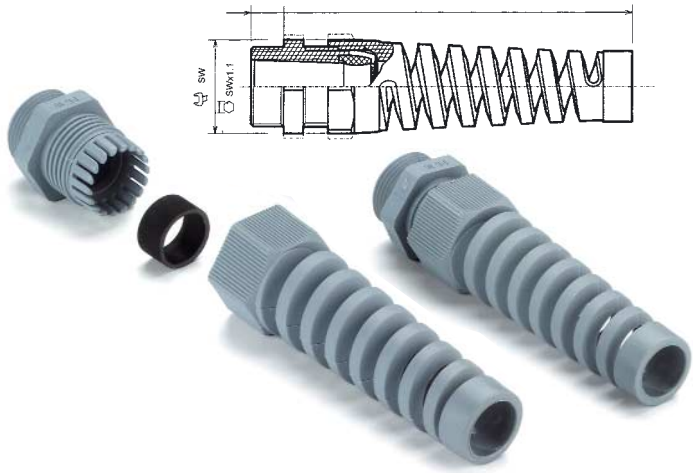

Cable gland specially for moveable connections.; Approvals to VDE and UL; halogen-free.

Reduced clamping range on request

EN 50262: metric

Technical data

Material:	Polyamide 6
Sealing:	Neoprene
Temperature:	-40°C...+70°C (peak 150°C)
Protection class:	IP 68 / 5 bar with GWDR
Colour:	similar grey RAL 7035 (on request 9005)

Ordering data

Type	Thread	Clamp range	L	L1	SW	Qty.	Cat. No.
Metric.plastic-KV with strain relief spiral cap							
VGM12-K68 SKS	M 12 x 1.5	3.0 - 6.5	66.5	8	15	100	**1776700000**
VGM16-K68 SKS	M 16 x 1.5	5.0 - 10.0	80	10	22	50	**1776710000**
VGM20-K68 SKS	M 20 x 1.5	6.0 - 12.0	106	11	24	50	**1778860000**
VGM20-K68 SKS	M 20 x 1.5	10.0 - 14.0	106	15	27	50	**1776720000**
VGM25-K68 SKS	M 25 x 1.5	13.0 - 18.0	129	15	33	25	**1776730000**
PG plastic cable glands with strain relief spiral cap							
VG 7-K68 SKS	PG 7	3.0 - 6.5	62	8	15	50	**1720470000**
VG 9-K68 SKS	PG 9	4.0 - 8.0	78	8	19	50	**1720480000**
VG 11-K68 SKS	PG 11	5.0 - 10.0	84	8	22	50	**1720490000**
VG 13.5-K68 SKS	PG 13.5	6.0 - 12.0	105	9	24	50	**1720500000**
VG 16-K68 SKS	PG 16	10.0 - 14.0	117	10	27	25	**1720510000**
VG 21-K68 SKS	PG 21	13.0 - 18.0	130	11	33	20	**1720520000**

all sizes in mm

Cable Gland ADE 1F

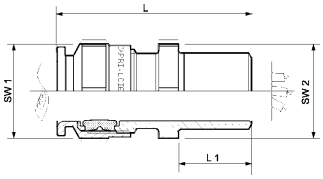

For use in hazardous areas
EEx e II,
EEx d IIB,
EEx d II C ≤ 2000 cm³

These cable glands are certified in accordance with LCIE 97ATEX6008X.

Technical data

Material:	Nickel plated brass (on request stainless steel)
Sealing:	Neoprene
Temperature:	-40 °C - 100 °C
Protection class:	IP 68 (10 bar)
	ATEX available

Ordering data

Type	Thread	Protecting cap	Clamp range	L	L1	SW1	SW2	Qty.	Cat. No.
Metric cable glands									
VG ADE 1/M 12 Exe/d	M 12 x 1.5	4	4.0 - 8.0	35	15	15	15	5	**1736690000**
VG ADE 1/M 16 Exe/d	M 16 x 1.5	5	6.0 - 12.0	37	15	19	19	5	**1736700000**
VG ADE 1/M 20 Exe/d	M 20 x 1.5	6	8.5 - 16.0	40	15	24	24	2	**1736710000**
VG ADE 1/M 25 Exe/d	M 25 x 1.5	7	12.0 - 20.5	42	15	30	30	2	**1736720000**
VG ADE 1/M 32 Exe/d	M 32 x 1.5	8	16.0 - 27.5	49	15	41	41	2	**1736730000**
VG ADE 1/M 40 Exe/d	M 40 x 1.5	9	21.0 - 34.0	51	15	48	48	2	**1736740000**
VG ADE 1/M 50 Exe/d	M 50 x 1.5	10	27.0 - 41.0	55	16	55	55	1	**1736750000**
VG ADE 1/M 63 Exe/d	M 63 x 1.5	12	40.0 - 56.0	60	17	72	72	1	**1736760000**
VG ADE 1/M 75 Exe/d	M 75 x 1.5	13	47.0 - 65.0	67	18	85	85	1	**1736770000**
VG ADE 1/M 80 Exe/d	M 80 x 2	14	54.0 - 73.0	76	20	95	95	1	**1736780000**
VG ADE 1/M 90 Exe/d	M 90 x 2	15	63.0 - 82.0	83	22	110	110	1	**1736790000**
VG ADE 1/M 100 Exe/d	M 100 x 2	16	72.0 - 92.0	84	22	120	120	1	**1736800000**

all sizes in mm

Cable glands

ADE 4F

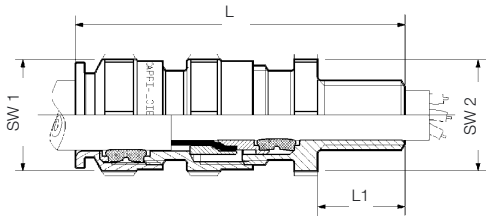

For use in hazardous areas:
EEx e II,
EEx d IIB,
EEx d II C ≤ 2000 cm³

These cable glands are certified in accordance with LCIE 97ATEX6008X.

On request: silicone sealing ring, halogen-free,
Working temperature: -70 °C - +220 °C.

Technical data

Material:	Nickel plated brass (on request stainless steel)
Sealing:	Neoprene
Temperature:	-40 °C - 100 °C
Protection class:	IP 68 (10 bar)
	ATEX available

Ordering data

Type	Thread	Sealing ring	Cable Ø outside	Armoured	Cable Ø inside	L	L1	SW1	SW2	Qty.	Cat. No.
Metric gland											
VG ADE 4F/M 12 Exe/d	M 12 x 1.5	5	6.0 - 12.0	0 - 0.9	4.0 - 8.0	51	15	19	19	5	**1736810000**
VG ADE 4F/M 16 Exe/d	M 16 x 1.5	6	8.5 - 16.0	0 - 1.25	6.0 - 12.0	57	15	24	24	5	**1736820000**
VG ADE 4F/M 20 Exe/d	M 20 x 1.5	7	12.0 - 21.0	0 - 1.25	8.5 - 15.5	61	15	30	30	2	**1736830000**
VG ADE 4F/M 25 Exe/d	M 25 x 1.5	8	16.0 - 27.5	0 - 1.6	12.0 - 20.5	71	15	41	41	2	**1736840000**
VG ADE 4F/M 32 Exe/d	M 32 x 1.5	9	21.0 - 34.0	0 - 1.6	16.0 - 27.5	78	15	48	48	2	**1736850000**
VG ADE 4F/M 40 Exe/d	M 40 x 1.5	10	27.0 - 41.0	0 - 2	21.0 - 34.0	83	15	55	55	2	**1736860000**
VG ADE 4F/M 50 Exe/d	M 50 x 1.5	11	33.0 - 48.0	0 - 2.5	27.0 - 41.0	90	16	64	64	1	**1736870000**
VG ADE 4F/M 63 Exe/d	M 63 x 1.5	13	47.0 - 65.0	0 - 2.5	40.0 - 56.0	102	17	85	85	1	**1736880000**
VG ADE 4F/M 75 Exe/d	M 75 x 1.5	14	54.0 - 74.0	0 - 2.5	47.0 - 65.0	110	18	95	95	1	**1736890000**
VG ADE 4F/M 80 Exe/d	M 80 x 2	15	63.0 - 83.0	0 - 3.15	54.0 - 73.0	124	20	110	110	1	**1736900000**
VG ADE 4F/M 90 Exe/d	M 90 x 2	16	72.0 - 93.0	0 - 3.15	63.0 - 82.0	130	22	120	120	1	**1736910000**

all sizes in mm

EMC cable glands

High shielding factor up to 100 dB. An endless lock washer is pressed against the cable armour by two conical rings; thus guaranteeing a reliable and safe contact. This ensures that the shield braiding is inserted into the enclosure.

Technical data

Material:	Nickel plated brass
Sealing:	TPE-V /thermoplastic Elastomer
O-Ring:	Perbunan
Temperature:	-40°C ... +135°C (peak 150°C)
Protection class:	IP 68

Ordering data

Type	Thread	Clamp range	Armour-Ø	L	SW	Qty.	Cat. No.
Metric cable glands brass							
VG EMC M18x1.5	M 18x1.5	6.0 - 9.5	3.0 - 7.0	26.7	24	5	**1706920000**
VG EMC M20x1.5	M 20x1.5	7.0 - 11.0	4.0 - 8.5	26.7	24	5	**1706940000**
VG EMC M24x1.5	M 24x1.5	16.5 - 14.0	8.0 - 12.0	33.5	30	5	**1706930000**
VG EMC M25x1.5	M 25x1.5	16.5 - 14.0	8.0 - 12.0	33.5	30	5	**1706950000**
PG cable gland brass							
VG EMC Pg 7/9	PG 7 / 9	4.0 - 6.0	1.5 - 4.0	32.9	17	20	**1713870000**
VG EMC Pg 9/11	PG 9 / 11	6.5 - 9.5	2.5 - 6.5	32.9	20	20	**1706860000**
VG EMC Pg 11	PG 11	6.0 - 9.0	3.5 - 7.5	39.6	24	20	**1706870000**
VG EMC Pg 13.5	PG 13.5	7.0 - 10.5	4.0 - 8.5	39.0	24	10	**1706880000**
VG EMC Pg 16	PG 16	10.0 - 14.0	8.0 - 13.0	40.5	30	10	**1706890000**
VG EMC Pg 16	PG 16	14.0 - 18.0	8.0 - 13.0	40.5	30	10	**1713880000**
VG EMC Pg 21	PG 21	14.0 - 18.0	10.0 - 15.0	40.5	35	10	**1706900000**
VG EMC Pg 21	PG 21	17.0 - 28.0	12.5 - 17.5	40.5	35	10	**1713890000**
VG EMC Pg 29	PG 29	22.0 - 26.0	15.0 - 21.0	43.5	40	5	**1706910000**
VG EMC Pg 29	PG 29	25.0 - 29.0	18.0 - 25.0	55.3	40	5	**1713900000**
VG EMC Pg 36	PG 36	32.0 - 27.0	18.0 - 25.0	55.3	40	5	**1770410000**

all sizes in mm

Lock nut brass

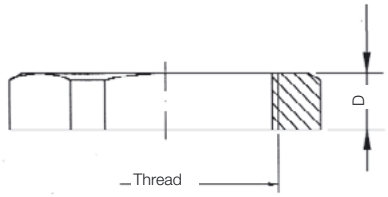

Lock nut for securing brass cable glands in accordance with DIN 46320

Technical data

Material:	Nickel plated brass (on request stainless steel)

Ordering data

Type	Thread	D	SW	Qty.	Cat. No.
Metric gland lock nut brass					
SKMU M 12-MS	M 12 x 1.5	2.8	14	50	**1772360000**
SKMU M 16-MS	M 16 x 1.5	2.8	18	50	**1736990000**
SKMU M 20-MS	M 20 x 1.5	3	23	50	**1737000000**
SKMU M 25-MS	M 25 x 1.5	3	28	25	**1737010000**
SKMU M 32-MS	M 32 x 1.5	4	36	20	**1737020000**
SKMU M 40-MS	M 40 x 1.5	4.5	44	10	**1737030000**
SKMU M 50-MS	M 50 x 1.5	5	54	5	**1737040000**
SKMU M 63-MS	M 63 x 1.5	6	70	5	**1737050000**
SKMU M 75-MS	M 75 x 1.5	8	85	5	**1737060000**
PG gland lock nut brass					
SKMU Pg7-MS	PG 7	2.8	15	50	**1694070000**
SKMU Pg9-MS	PG 9	2.8	18	50	**1694080000**
SKMU Pg11-MS	PG 11	3.0	21	50	**1694090000**
SKMU Pg13.5-MS	PG 13.5	3.0	23	50	**1694100000**
SKMU Pg16-MS	PG 16	3.0	26	25	**1694110000**
SKMU Pg21-MS	PG 21	3.5	32	20	**1719200000**
SKMU Pg29-MS	PG 29	4.0	41	20	**1719210000**
SKMU Pg36-MS	PG 36	5.0	51	10	**1719220000**
SKMU Pg42-MS	PG 42	5.0	58	10	**1719230000**
SKMU Pg48-MS	PG 48	5.5	64	5	**1719240000**

all sizes in mm

Lock nut with EMC

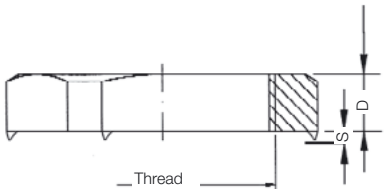

These lock nuts are equipped with six cutting elements, which cut into the painted insulating layer of the enclosure; thus creating an optimum contact.

Technical data

Material:	Nickel plated brass

Ordering data

Type	Thread	D	S	SW	Qty.	Cat. No.
Metric gland lock nut EMC brass			approx.			
SKMU EMC M10	M 10 x 1	3.10	1.0	12	100	**1777600000**
SKMU EMC M12	M 12 x 1.5	3.60	1.0	14	100	**1777610000**
SKMU EMC M16	M 16 x 1.5	3.60	1.0	18	100	**1777620000**
SKMU EMC M20	M 20 x 1.5	3.60	1.0	23	100	**1777630000**
SKMU EMC M25	M 25 x 1.5	3.60	1.0	28	50	**1777640000**
SKMU EMC M32	M 32 x 1.5	4.10	1.0	36	25	**1777650000**
SKMU EMC M40	M 40 x 1.5	4.60	1.0	44	25	**1777660000**
SKMU EMC M50	M 50 x 1.5	4.60	1.0	54	10	**1777670000**
SKMU EMC M63	M 63 x 1.5	6.60	1.0	70	10	**1777680000**
PG gland lock nut brass with EMC						
SKMU EMC Pg7	PG 7	4.7	1.0	15	20	**1718900000**
SKMU EMC Pg9	PG 9	4.7	1.0	18	20	**1718910000**
SKMU EMC Pg11	PG 11	4.7	1.0	21	20	**1718920000**
SKMU EMC Pg13.5	PG 13.5	4.7	1.0	23	10	**1718930000**
SKMU EMC Pg16	PG 16	4.7	1.0	26	10	**1718940000**
SKMU EMC Pg21	PG 21	5.2	1.0	32	10	**1718950000**
SKMU EMC Pg29	PG 29	5.7	1.0	41	5	**1718960000**

all sizes in mm

Cable glands

Lock nut Plastic

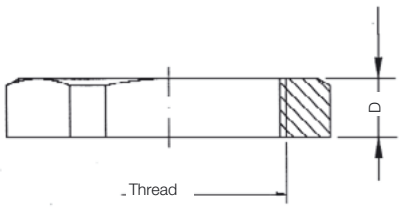

Lock nut for securing plastic cable glands in accordance with DIN 46320.

Technical data

Material:	Polyamide, glass fibre reinforced
Temperature:	-40°C ... +70°C
Colour:	similar grey RAL 7035
DIN:	46320

Ordering data

Type	Thread	D	SW	Qty.	Cat. No.
Metric gland lock nut plastic grey					
SKMU M12-K GR	M 12 x 1.5	5	18	50	**1772440000**
SKMU M16-K GR	M 16 x 1.5	5	22	50	**1772450000**
SKMU M20-K GR	M 20 x 1.5	6	26	50	**1772460000**
SKMU M25-K GR	M 25 x 1.5	6	32	25	**1772470000**
SKMU M32-K GR	M 32 x 1.5	7	41	20	**1772480000**
SKMU M40-K GR	M 40 x 1.5	7	50	20	**1772490000**
SKMU M50-K GR	M 50 x 1.5	8	60	10	**1772500000**
SKMU M63-K GR	M 63 x 1.5	8	75	10	**1772510000**
PG gland lock nut plastic grey					
SKMU Pg7-K GR	PG 7	5.0	19	50	**1697440000**
SKMU Pg9-K GR	PG 9	5.0	22	50	**1697450000**
SKMU Pg11-K GR	PG 11	5.0	24	50	**1697460000**
SKMU Pg13.5-K GR	PG 13.5	6.0	27	50	**1697470000**
SKMU Pg16-K GR	PG 16	6.0	30	25	**1697480000**
SKMU Pg21-K GR	PG 21	7.0	36	20	**1698220000**
SKMU Pg29-K GR	PG 29	7.0	46	20	**1698230000**
SKMU Pg36-K GR	PG 36	8.0	60	10	**1698240000**
SKMU Pg42-K GR	PG 42	8.0	65	10	**1698250000**
SKMU Pg48-K GR	PG 48	8.0	70	5	**1719090000**

all sizes in mm

Lock nut Plastic Ex

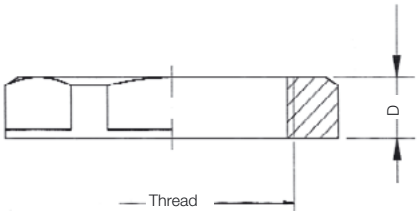

ATEX

Lock nut for securing cable glands used in Ex-areas in accordance with LCIE 97ATEX6007X.

Technical data

Material:	Polyamide
Temperature:	-40°C ... +70°C
Colour:	similar black RAL 9005

Ordering data

Type	Thread	D	SW	Qty.	Cat. No.
Metric gland lock nut plastic Ex					
SKMU M 16-K SW	M 16 x 1.5	5.0	22	50	**1736920000**
SKMU M 20-K SW	M 20 x 1.5	6.0	26	50	**1736930000**
SKMU M 25-K SW	M 25 x 1.5	6.0	32	25	**1736940000**
SKMU M 32-K SW	M 32 x 1.5	7.0	41	20	**1736950000**
SKMU M 40-K SW	M 40 x 1.5	7.0	50	10	**1736960000**
SKMU M 50-K SW	M 50 x 1.5	8.0	60	5	**1736970000**
SKMU M 63-K SW	M 63 x 1.5	8.0	75	5	**1736980000**
PG gland lock nut plastic Ex					
SKMU Pg7-K SW	PG 7	5.0	19	50	**1719100000**
SKMU Pg9-K SW	PG 9	5.0	22	50	**1719110000**
SKMU Pg11-K SW	PG 11	5.0	24	50	**1719120000**
SKMU Pg13.5-K SW	PG 13.5	6.0	27	50	**1719130000**
SKMU Pg16-K SW	PG 16	6.0	30	25	**1719140000**
SKMU Pg21-K SW	PG 21	7.0	36	20	**1719150000**
SKMU Pg29-K SW	PG 29	7.0	46	20	**1719160000**
SKMU Pg36-K SW	PG 36	8.0	60	10	**1719170000**
SKMU Pg42-K SW	PG 42	8.0	65	10	**1719180000**
SKMU Pg48-K SW	PG 48	8.0	70	5	**1719190000**

all sizes in mm

Threaded sealing rings

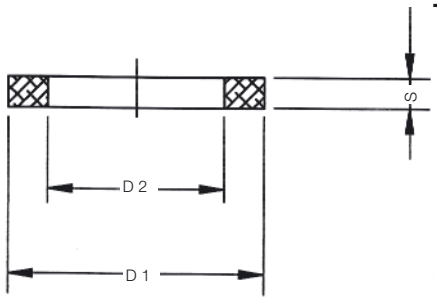

To increase the protection class of cable glands.

Threaded sealing rings

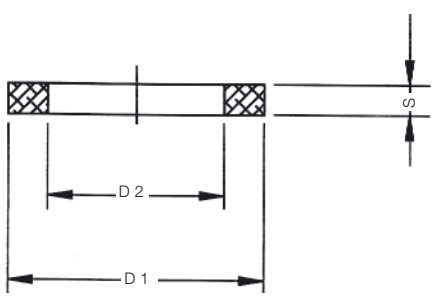

ATEX

To increase the protection class of cable glands in Ex areas in accordance with LCIE 97ATEX6007X.

Technical data

Material:	Polyethylene
DIN:	46320

Technical data

Material:	Neoprene
DIN:	46320

Ordering data

Type	Thread	D1	D2	S	Qty.	Cat. No.
Metric threaded sealing rings, polyethylene						
GWDR M12-PO	M 12 x 1.5	16	12	1.5	100	**1777920000**
GWDR M16-PO	M 16 x 1.5	20	16	1.5	100	**1777930000**
GWDR M20-PO	M 20 x 1.5	24	20	2.0	100	**1777940000**
GWDR M25-PO	M 25 x 1.5	29	25	2.0	100	**1777950000**
GWDR M32-PO	M 32 x 1.5	36	32	2.0	50	**1777960000**
GWDR M40-PO	M 40 x 1.5	44	40	2.0	50	**1777970000**
GWDR M50-PO	M 50 x 1.5	54	50	2.0	25	**1777980000**
GWDR M63-PO	M 63 x 1.5	67	63	2.0	10	**1777990000**
PG Threaded sealing rings, polyethylene						
GWDR Pg7-PO	PG 7	16.5	12.5	1.6	50	**1719440000**
GWDR Pg9-PO	PG 9	19	15.3	1.6	50	**1719450000**
GWDR Pg11-PO	PG 11	22.5	18.6	1.8	50	**1719460000**
GWDR Pg13.5-PO	PG 13.5	25	20.4	1.8	50	**1719470000**
GWDR Pg16-PO	PG 16	27	22.5	1.8	25	**1719480000**
GWDR Pg21-PO	PG 21	33.5	28.5	2.2	20	**1719490000**
GWDR Pg29-PO	PG 29	43.5	37.0	2.2	20	**1719500000**
GWDR Pg36-PO	PG 36	55	47.0	2.7	10	**1719510000**
GWDR Pg42-PO	PG 42	63	54.0	3.2	10	**1719520000**
GWDR Pg48-PO	PG 48	69	59.3	3.2	5	**1719530000**

all sizes in mm

Ordering data

Type	Thread	D1	D2	S	Qty.	Cat. No.
Metric threaded sealing rings, neoprene						
GWDR M 16-NP	M 16	22	16	1.2	20	**1736230000**
GWDR M 20-NP	M 20	24	20	1.2	20	**1736240000**
GWDR M 25-NP	M 25	30	25	1.5	20	**1736250000**
GWDR M 32-NP	M 32	42	32	1.5	20	**1736260000**
GWDR M 40-NP	M 40	52	40	1.5	10	**1736270000**
GWDR M 50-NP	M 50	63	50	1.5	10	**1736280000**
GWDR M 63-NP	M 63	77	63	2	10	**1736290000**
PG threaded sealing rings, neoprene						
GWDR Pg7-NP	PG 7	17	11.6	1.2	50	**1719540000**
GWDR Pg9-NP	PG 9	21	14.0	1.2	50	**1719550000**
GWDR Pg11-NP	PG 11	24	17.0	1.2	50	**1719560000**
GWDR Pg13.5-NP	PG 13.5	27	19.5	1.2	50	**1719570000**
GWDR Pg16-NP	PG 16	30	22.5	1.2	25	**1719580000**
GWDR Pg21-NP	PG 21	35	28.3	1.5	20	**1719590000**
GWDR Pg29-NP	PG 29	45	37.0	1.5	20	**1719600000**
GWDR Pg36-NP	PG 36	60	47.0	1.5	10	**1719610000**
GWDR Pg42-NP	PG 42	65	54.0	1.5	10	**1719620000**
GWDR Pg48-NP	PG 48	71	59.3	1.5	5	**1719630000**

all sizes in mm

Cable glands

Sealing plug, plastic

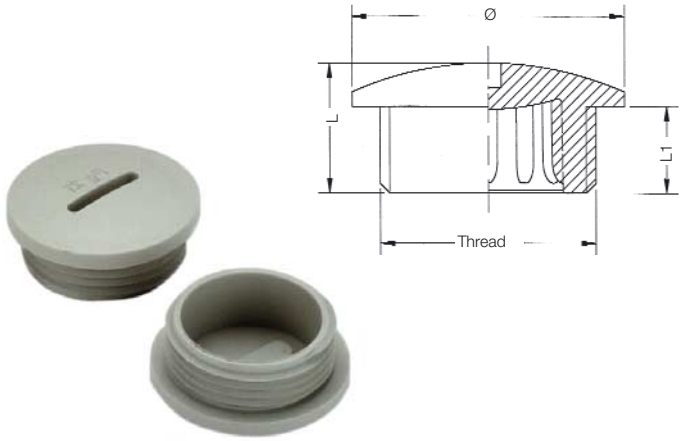

Glass-fibre reinforced polyamide offers excellent resistance to numerous chemicals.

Technical data

Material:	Polyamide, glass fibre reinforced
Temperature:	-40°C ... +100°C
Protection class:	IP54 (with thread sealing ring Type GWDR ...-PO = IP66)
Colour:	similar Grey RAL 7035
DIN:	46320

Ordering data

Type	Thread	L	L1	Head Ø	Qty.	Cat. No.
Metric sealing plug, plastic						
VP M12-K54	M12 x 1.5	10.0	6	15	100	**1776930000**
VP M16-K54	M16 x 1.5	11.5	7	19	100	**1776920000**
VP M20-K54	M20 x 1.5	12.5	7.5	22	100	**1776910000**
VP M25-K54	M25 x 1.5	15.0	11	27	100	**1776900000**
VP M32-K54	M32 x 1.5	16.0	11	34	100	**1776940000**
VP M40-K54	M40 x 1.5	18.0	12	42	50	**1776950000**
VP M50-K54	M50 x 1.5	20.0	13	52	50	**1776960000**
VP M63-K54	M63 x 1.5	20.0	14	65	50	**1776970000**
PG sealing plug, plastic						
VP 7-K54	PG 7	8	6	15	50	**1719250000**
VP 9-K54	PG 9	9	6	19	50	**0294760000**
VP 11-K54	PG 11	10.5	6.5	22	50	**0294860000**
VP 13.5-K54	PG 13.5	9.5	6	25	50	**0294960000**
VP 16-K54	PG 16	9.5	6	27	25	**0295060000**
VP 21-K54	PG 21	11	8	33	20	**0295160000**
VP 29-K54	PG 29	12	8	44	20	**0501160000**
VP 36-K54	PG 36	15	10	55	10	**0501260000**
VP 42-K54	PG 42	16	10	62	10	**0501360000**
VP 48-K54	PG 48	16	12	69	5	**1719260000**

all sizes in mm

Sealing plug, brass

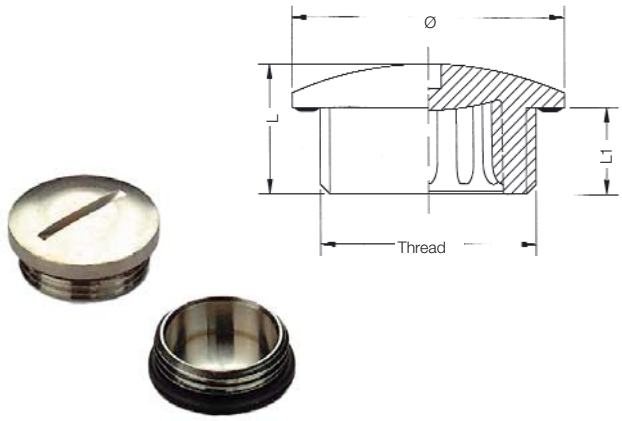

Self-sealing version with O-ring made of perbunan.
Also available with a hexagon head.

Technical data

Material:	Nickel plated brass
Sealing:	O-Ring Perbunan
Temperature:	-40°C ... +100°C
Protection class:	IP65

Ordering data

Type	Thread	L	L1	Head-Ø	Qty.	Cat. No.
Metric sealing plug, brass						
VP M16 - MS65	M 16		5.0	18	100	**1777730000**
VP M20 - MS65	M 20		6.5	22	100	**1777740000**
VP M25 - MS65	M 25		7.0	28	100	**1777750000**
VP M32 - MS65	M 32		8.0	35	50	**1777760000**
VP M40 - MS65	M 40		8.0	45	50	**1777770000**
VP M50 - MS65	M 50		9.0	55	25	**1777780000**
VP M63 - MS65	M 63		10.0	68	10	**1777790000**
PG sealing plug, brass						
VP 7-MS65	PG 7	8	5	16	50	**0521600000**
VP 9-MS65	PG 9	7.9	4.5	19	50	**0294700000**
VP 11-MS65	PG 11	7.9	4.5	22	50	**0294800000**
VP 13.5-K65	PG 13.5	9.5	6	24	50	**0294900000**
VP 16-MS65	PG 16	9	6	26	25	**0295000000**
VP 21-MS65	PG 21	10	6	32	20	**0295100000**
VP 29-MS65	PG 29	12	8	39	20	**0501100000**
VP 36-MS65	PG 36	15	9	50	10	**0501200000**
VP 42-MS65	PG 42	16	10	57	10	**0501300000**
VP 48-MS65	PG 48	16	10	64	5	**1719270000**

all sizes in mm

Sealing plug plastic EExe

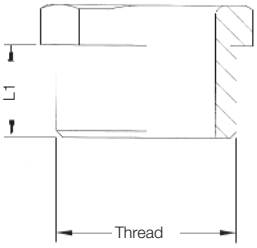

ATEX

Sealing plugs for Ex areas in accordance with LCIE 97ATEX6003X.
Also available with metric ISO thread

Sealing plug brass EExe / EExd

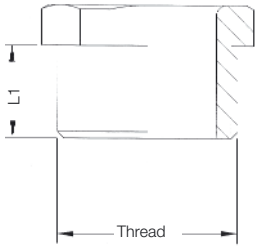

ATEX

Hexagon head version for Ex-areas (EExe II).
Approvals in accordance with LCIE 98ATEX0001X.
Also available with metric ISO thread.

Technical data

Material:	Polyamide
Temperature:	-40°C ... +100°C
Protection class:	IP54 (with thread sealing ring Type GWDR ...-PO = IP66)
	ATEX granted
Colour:	similar Black RAL 9005

Ordering data

Type	Thread	L	L1	SW	Qty.	Cat. No.
Metric sealing plug, plastic EExe						
VP M 16-Exe SW	M 16 x 1.5	19	15	19	50	**1737070000**
VP M 20-Exe SW	M 20 x 1.5	19	15	23	50	**1737080000**
VP M 25-Exe SW	M 25 x 1.5	20	15	28	25	**1737090000**
VP M 32-Exe SW	M 32 x 1.5	20.5	15	36	20	**1737100000**
VP M 40-Exe SW	M 40 x 1.5	20.5	15	44	10	**1737110000**
VP M 50-Exe SW	M 50 x 1.5	21	15	54	5	**1737120000**
VP M 63-Exe SW	M 63 x 1.5	21.5	15	67	5	**1737130000**
PG sealing plug, plastic EExe						
VP 7-Exe SW	PG 7	12	8	15	50	**1719280000**
VP 9-Exe SW	PG 9	14.5	10	19	50	**1719290000**
VP 11-Exe SW	PG 11	15	10.5	22	50	**1569380000**
VP 13.5-Exe SW	PG 13.5	16	11	24	50	**1569390000**
VP 16-Exe SW	PG 16	17	12	27	25	**1569400000**
VP 21-Exe SW	PG 21	18	12.5	32	20	**1569410000**
VP 29-Exe SW	PG 29	19	13.5	40	20	**1719300000**
VP 36-Exe SW	PG 36	21	15	54	10	**1719310000**
VP 42-Exe SW	PG 42	21.5	15	59	10	**1719320000**
VP 48-Exe SW	PG 48	22	15.5	64	5	**1719330000**

all sizes in mm

Technical data

Material:	Nickel plated brass
Temperature:	-40°C ... +100°C
Protection class:	IP54 (with thread sealing ring Type GWDR ...-NP = IP66)
	ATEX granted

Ordering data

Type	Thread	L	L1	SW	Qty.	Cat. No.
Metric sealing plug, brass EExe						
VP M 16-Exe SW	M 16 x 1.5	18	15	18	50	**1737140000**
VP M 20-Exe SW	M 20 x 1.5	18	15	23	50	**1737150000**
VP M 25-Exe SW	M 25 x 1.5	18.5	15	28	25	**1737160000**
VP M 32-Exe SW	M 32 x 1.5	19	15	36	20	**1737170000**
VP M 40-Exe SW	M 40 x 1.5	19	15	44	10	**1737180000**
VP M 50-Exe SW	M 50 x 1.5	21	16	54	5	**1737190000**
VP M 63-Exe SW	M 63 x 1.5	24	17	67	5	**1737200000**
PG sealing plug, brass EExe						
VP 7-Exe MS	PG 7	18	15	15	50	**1719340000**
VP 9-Exe MS	PG 9	18	15	18	50	**1719350000**
VP 11-Exe MS	PG 11	18	15	21	50	**1719360000**
VP 13.5-Exe MS	PG 13.5	18	15	23	50	**1719370000**
VP 16-Exe MS	PG 16	18	15	26	25	**1719380000**
VP 21-Exe MS	PG 21	18	15	32	20	**1719390000**
VP 29-Exe MS	PG 29	19	15	41	20	**1719400000**
VP 36-Exe MS	PG 36	20	15	51	10	**1719410000**
VP 42-Exe MS	PG 42	20	15	58	10	**1719420000**
VP 48-Exe MS	PG 48	20.5	15	64	5	**1719430000**

all sizes in mm

Cable glands

Adaptors

Technical data

Material:	Nickel plated brass
Temperature:	-40°C ... +100°C
Protection class:	IP54 (with thread sealing ring Type GWDR ...-NP = IP66)
Approval:	in accordance with LCIE 97ATEX6001X

Metric PG adaptors, available soon.
Please contact us

Male thread	3” NPT	21/2” NPT	2” NPT	11/2“ NPT	11/4“ NPT	1“ NPT	3/4“ NPT	1/2“ NPT	M 75	M 63	M 50	M 40	M 32	M 25	M 20	M 16
Female thread																
M 16	1737420000	1737430000	1737440000	1737450000	1737460000	1737470000	1737480000	1737490000	1737500000	1737510000	1737520000	1737530000	1737540000	1737550000	1737560000	1737570000
M 20	1737580000	1737590000	1737600000	1737610000	1737620000	1737630000	1737640000	1737650000	1737660000	1737670000	1737680000	1737690000	1737700000	1737710000	1737720000	1737730000
M 25	1737740000	1737750000	1737760000	1737770000	1737780000	1737790000	1737800000	1737810000	1737820000	1737830000	1737840000	1737850000	1737860000	1737870000	1737880000	
M 32	1737890000	1737900000	1737910000	1737920000	1737930000	1737940000	1737950000		1737960000	1737970000	1737980000	1737990000	1738000000	1738010000		
M 40	1738020000	1738030000	1738040000	1738050000	1738060000	1738070000			1738080000	1738090000	1738100000	1738110000	1738120000			
M 50	1738130000	1738140000	1738150000	1738160000	1738170000				1738180000	1738190000	1738200000	1738210000				
M 63	1738220000	1738230000	1738240000	1738250000					1738260000	1738270000	1738280000					
M 75	1738290000	1738300000	1738310000						1738320000	1738330000						
1/2“ NPT	1738340000	1738350000	1738360000	1738370000	1738380000	1738390000	1738400000	1738410000	1738420000	1738430000	1738440000	1738450000	1738460000	1738470000	1738480000	1738490000
3/4“ NPT	1738500000	1738510000	1738520000	1738530000	1738540000	1738550000	1738560000	1738570000	1738580000	1738590000	1738600000	1738610000	1738620000	1738630000	1738640000	
1“ NPT	1738650000	1738660000	1738670000	1738680000	1738690000	1738700000			1738710000	1738720000	1738730000	1738740000	1738750000	1738760000		
1 1/4“ NPT	1738770000	1738780000	1738790000	1738800000	1738810000	1738820000			1738830000	1738840000	1738850000	1738860000	1738870000			
11/2“ NPT	1738880000	1738890000	1738900000	1738910000	1738920000				1738930000	1738940000	1738950000	1738960000				
2” NPT	1738970000	1738980000	1738990000	1739000000					1739010000	1739020000	1739030000					
21/2” NPT	1739040000	1739050000	1739060000						1739070000	1739080000						
3” NPT	1739090000	1739100000							1739110000							

Stopper

Seal stopper

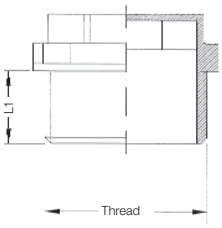

Closed version which can be can also be used as as a simple sealing plug

Accessories

Earthing washer, brass for lead-sheathed cables

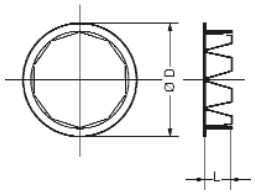

Mounting instructions

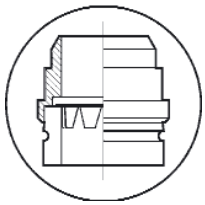

In order to improve conductivity, the earthing washer is inserted into the cable gland when using lead-sheathed cables.

Please refer to the mounting instructions.

Technical data

Material:	Polyethylene
Temperature:	-20°C ... +70°C
Protection class:	IP 54
Colour:	similar grey RAL 7035

Technical data

Material:	brass

Ordering data

Type	Thread	L1	Qty.	Cat. No.
PG seal stopper				
DN Pg9	PG 9	9.5	50	**1719640000**
DN Pg11	PG 11	10	50	**1719650000**
DN Pg13.5	PG 13.5	12	50	**1719660000**
DN Pg16	PG 16	12	25	**1719670000**
DN Pg21	PG 21	14	20	**1719680000**
DN Pg29	PG 29	16	20	**1719690000**
DN Pg36	PG 36	19	10	**1719700000**
DN Pg42	PG 42	23	10	**1719710000**
DN Pg48	PG 48	24	5	**1719720000**

all sizes in mm

Ordering data

Type	Cable Ø	D	L	Qty.	Cat. No.
EA VS No. 6	6.0 - 11.0	13.9	4	20	**1736370000**
EA VS No. 7	9.0 - 15.0	18.3	4.8	20	**1736380000**
EA VS No. 8	12.0 - 20.0	23.8	5.7	20	**1736390000**
EA VS No. 9	18.0 - 26.5	31	7.2	20	**1736400000**
EA VS No. 10	21.0 - 32.5	38.3	8.2	20	**1736410000**
EA VS No. 11	28.0 - 39.5	45.3	8.8	20	**1736420000**
EA VS No. 12	33.0 - 46.5	52.8	9.5	20	**1736430000**
EA VS No. 13	40.0 - 54.5	60.8	10.1	10	**1736440000**
EA VS No. 14	46.5 - 61.0	71	11.4	10	**1736450000**
EA VS No. 15	54.0 - 72.5	60.5	12.6	10	**1736460000**
EA VS No. 16	63.0 - 81.5	89.5	12.6	5	**1736470000**

all sizes in mm

Accessories

Serated lock washer

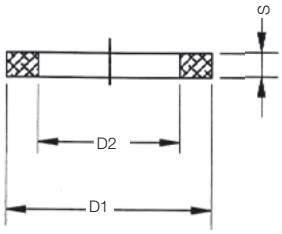

Protecting cap (shroud)

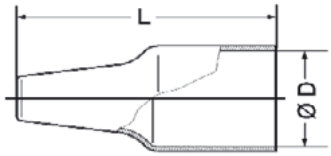

The protective cap is simply slid or pulled over the cable gland. The use of protective caps achieves are more effective sealing of the cable glands via the exterior cable sheath.
This method of sealing protects cable glands in corrosive atmospheres.

Technical data

Material:	Steel, nickel plated

Technical data

Material:	PVC
Temperature:	-40 °C - 100 °C
Colour:	Black

Ordering data

Type	Thread	D1	D2	S	Qty.	Cat. No.
Metric safety washers						
SZS M 16	M 16	–	–	–	10	**1736300000**
SZS M 20	M 20	32.8	21.5	1.5	10	**1736310000**
SZS M 25	M 25	39.8	26.5	1.9	10	**1736320000**
SZS M 32	M 32	49.3	32.8	1.5	10	**1736330000**
SZS M 40	M 40	64.5	42.2	1.8	5	**1736340000**
SZS M 50	M 50	80	53	1.8	5	**1736350000**
SZS M 63	M 63	100	64	1.9	5	**1736360000**

all sizes in mm

Ordering data

Type	Cable Ø	D	L	L1	Qty.	Cat. No.
Protection cap No. 4	6.0 - 12.0	20	90	42	20	**1736560000**
Protection cap No. 5	6.0 - 12.0	20	90	42	20	**1736570000**
Protection cap No. 6	8.5 - 16.0	25	110	50	20	**1736580000**
Protection cap No. 7	10.0 - 21.0	31	110	50	20	**1736590000**
Protection cap No. 8	16.0 - 27.5	43	125	60	20	**1736600000**
Protection cap No. 9	21.0 - 34.0	50	135	70	20	**1736610000**
Protection cap No. 10	27.0 - 41.0	57	150	75	20	**1736620000**
Protection cap No. 11	33.0 - 48.0	67	165	80	10	**1736630000**
Protection cap No. 12	40.0 - 56.0	75	170	82	10	**1736640000**
Protection cap No. 13	47.0 - 65.0	89	190	97	10	**1736650000**
Protection cap No. 14	54.0 - 74.0	100	205	105	5	**1736660000**
Protection cap No. 15	63.0 - 83.0	115	245	120	5	**1736670000**
Protection cap No. 16	72.0 - 93.0	125	245	120	5	**1736680000**

all sizes in mm

Accessories

Earthing ring, brass

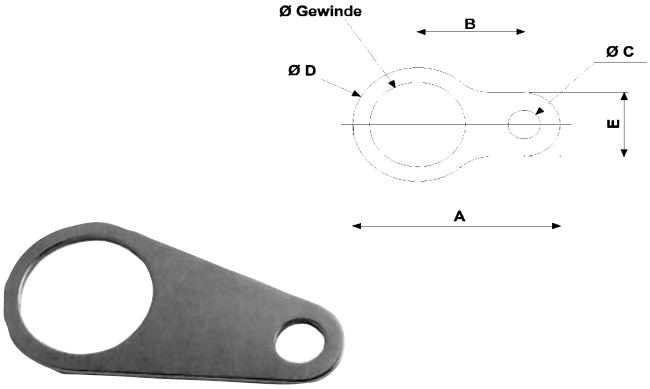

The earthing ring is slid over the entry thread. An improved connection between the enclosure and earth or other conductive components is created by the use of earthing rings.

Technical data

Material:	Nickel plated brass

Ordering data

Type	Thread	A	B	C	D	E	Qty.	Cat. No.
Metric safety washers, brass								
EA-RING MS/M 16	M 16	48.75	30	6.75	24.50	13	20	**1736480000**
EA-RING MS/M 20	M 20	53.80	33	7	28.60	13	20	**1736490000**
EA-RING MS/M 25	M 20	61.50	36	10.50	34	17	20	**1736500000**
EA-RING MS/M 32	M 32	73	41	12.20	42	22	20	**1736510000**
EA-RING MS/M 40	M 40	86.50	44.50	13.50	54	30	10	**1736520000**
EA-RING MS/M 50	M 50	111.50	58	13.50	67	40	10	**1736530000**
EA-RING MS/M 63	M 63	125.50	67	13.50	77	40	10	**1736540000**
EA-RING MS/M 75	M 75	137.50	73	13.50	89	40	10	**1736550000**

all sizes in mm

Pressure compensating elements

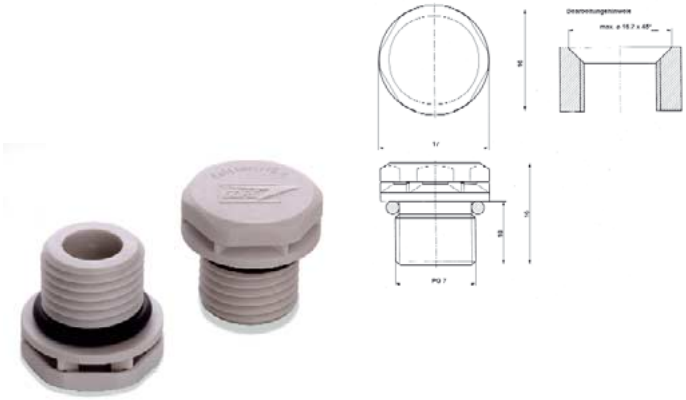

Enclosures for electrical and electronic modules are used in environments with harsh climate changes. Temperature fluctuations can lead to considerable pressure fluctuations within a liquid-tight container. If negative pressure levels resulting from temperature fluctuations are sufficient, moist air will penetrate in to the enclosure to compensate the pressure. After a number of temperature fluctuation cycles, condensation can form in the enclosure if ventilation via the seal is inadequate.

Our GORE-TEX® pressure compensation element, **DAE PG**, protects electrical and electronic components against failure: the enclosure can "breathe" even though according to IP standards it is liquid-tight.

Technical data

Operating temperature	- 40°C to + 100°C
Protection class	IP 69 K
Material	PBT- GF 20
Colour	similar to grey RAL 7038 / black RAL 9005
Connection thread	PG7
Osmotic potential of membrane	> 0.6 bar (membrane side)
Air flow rate, at 70 mbar.	≥ 12l /h
Membrane characteristics	water and oil resistant
Weathering behaviour (Xenotest 3.600 h)	No or very slight yellowing and alteration of the surface No significant alteration to the mechanical characteristics

Ordering data

Type	Thread	Qty.	Cat. No.
DAE PG 7 grey	PG7	10	**1753530000**
DAE M 12 black	M12	10	**1806480000**

Cable glands

Drain stopper

We recommend the the use of EWS drain stoppers to prevent the building up of condensation water within enclosures, and also to guarantee sufficient ventilation.

Breather Drains

BD 1

BD 2

DLP

99ATEX3050U

Technical data

Material:	Polyamide
Temperature:	-20°C ... +70°C
Protection class:	IP 65
Colour:	similar black RAL 9005

Technical data

Material:	Körper	BD 1	Blank brass or stainless steel 1.4404
		BD 2	Blank brass or stainless steel 1.4404
		DLP	Blank brass or stainless steel 1.4404
	Filter	BD 1	Sinter nickel - chrom insert
		BD 2	Sinter nickel - chrom insert
		DLP	Sinter nickel - chrom insert
	Sealing	BD 1	Nylon seal
		BD 2	Nitril O-ring
		DLP	Nitril O-ring
Mounting:	BD 1	Direct mounting in available M 16 x 1.5 connection thread or with lock nut in 16-mm round hole	
	BD 2	Flanged fixing made with fourM 4 hexagon head screws washer and self locking lock nut	
	DLP	Direct mounting in available M 20 x 1.5 connection thread or with lock nut in 20 mm round hole	
Protection class:	BD 1	IP 54 in accordance with IEC 529	
	BD 2	IP 54 in accordance with IEC 529	
	DLP	IP 66	
Approvals:	BD 1	EEx e II i.a.w. EN 50019 Components certification 86B3174U	
	BD 2	EEx e II i.a.w. EN 50019 Components certification 86B3174U	
	DLP	EEx e II i.a.w. SIRA99ATEX3050U	

Ordering data

Type	Thread	Qty.	Cat. No.
EWS PG16	PG 16	25	**1719730000**
EWS M 25x1.5	M 25 x 1.5	25	**1719740000**

Ordering data

Type	Material	Qty.	Cat. No.
BD 1	Brass	1	**3883400000**
BD 1	Stainless steel	1	**3883500000**
BD 2	Brass	1	**3884300000**
BD 2	Stainless steel	1	**3884400000**
DLP	Brass	1	**3080760000**
DLP	Stainless steel	1	**3080770000**

НИОКР СИСТЕМС

ООО «НИОКРсистемс» - это оперативные поставки широкого спектра электронных компонентов отечественного и импортного производства напрямую от производителей и с крупнейших мировых складов. Реализуемая нашей компанией продукция насчитывает более полумиллиона наименований.

Благодаря этому наша компания предлагает к поставке практически не ограниченный ассортимент компонентов как оптовыми, мелкооптовыми партиями, так и в розницу.

Благодаря развитой сети поставщиков, помогаем в поиске и приобретении экзотичных или снятых с производства компонентов.

Наша компания это:

- Гарантия качества поставляемой продукции
- Широкий ассортимент
- Минимальные сроки поставок
- Техническая поддержка
- Подбор комплектации
- Индивидуальный подход
- Гибкое ценообразование
- Работаем по 275 ФЗ

ООО «НИОКР СИТЕМС»
Москва, 125362, Россия, ул. Вишневая, д. 9, к. 1, Блок 104 а и 104 в

Телефон: 8 (495) 268-14-82
Email: n@nsistems.ru

ИНН: 7735154786
ОГРН: 1167746717709