FAIRCHILD SEMICONDUCTOR™

May 2000
ADVANCE INFORMATION

FDS7064A

30V N-Channel PowerTrench® MOSFET

General Description

This N-Channel MOSFET has been designed specifically to improve the overall efficiency of DC/DC converters using either synchronous or conventional switching PWM controllers. It has been optimized for "low side" synchronous rectifier operation, providing an extremely low $R_{DS(ON)}$ in a small package.

Applications

- Synchronous rectifier
- DC/DC converter

Features

- 19 A, 30 V $R_{DS(ON)}$ = 6.5 mΩ @ V_{GS} = 4.5 V
- High performance trench technology for extremely low $R_{DS(ON)}$
- High power and current handling capability
- Fast switching
- Bottomless™ SO-8 package: Enhanced thermal performance in industry-standard package size

Bottomless SO-8

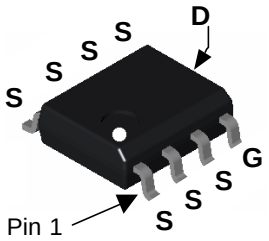

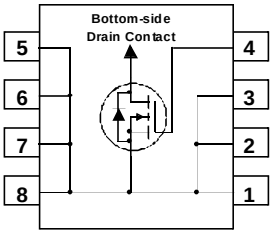

Absolute Maximum Ratings

T_A=25°C unless otherwise noted

Symbol	Parameter	Ratings	Units
V_{DSS}	Drain-Source Voltage	30	V
V_{GSS}	Gate-Source Voltage	±12	V
I_D	Drain Current – Continuous (Note 1a)	19	A
	– Pulsed	60	
P_D	Power Dissipation for Single Operation (Note 1a)	3.9	W
T_J, T_{STG}	Operating and Storage Junction Temperature Range	–55 to +175	°C

Thermal Characteristics

$R_{\theta JA}$	Thermal Resistance, Junction-to-Ambient (Note 1a)	38	°C/W
$R_{\theta JC}$	Thermal Resistance, Junction-to-Case	1	°C/W

Package Marking and Ordering Information

Device Marking	Device	Reel Size	Tape width	Quantity
FDS7064A	FDS7064A	13"	12mm	2500 units

©2000 Fairchild Semiconductor Corporation

Electrical Characteristics

T_A = 25°C unless otherwise noted

Symbol	Parameter	Test Conditions	Min	Typ	Max	Units
Off Characteristics						
BV_{DSS}	Drain–Source Breakdown Voltage	V_{GS} = 0 V, I_D = 250 μA	30			V
$\frac{\Delta BV_{DSS}}{\Delta T_J}$	Breakdown Voltage Temperature Coefficient	I_D = 250 μA, Referenced to 25°C		20		mV/°C
I_{DSS}	Zero Gate Voltage Drain Current	V_{DS} = 24 V, V_{GS} = 0 V			1	μA
I_{GSSF}	Gate–Body Leakage, Forward	V_{GS} = 12 V, V_{DS} = 0 V			100	nA
I_{GSSR}	Gate–Body Leakage, Reverse	V_{GS} = –12 V , V_{DS} = 0 V			–100	nA
On Characteristics (Note 2)						
$V_{GS(th)}$	Gate Threshold Voltage	V_{DS} = V_{GS}, I_D = 250 μA	0.8	1.2	2	V
$\frac{\Delta V_{GS(th)}}{\Delta T_J}$	Gate Threshold Voltage Temperature Coefficient	I_D = 250 μA, Referenced to 25°C		-4		mV/°C
$R_{DS(on)}$	Static Drain–Source On–Resistance	V_{GS} = 4.5 V, I_D = 19 A V_{GS} = 10 V, I_D = 21 A			6.5 5.5	mΩ
$I_{D(on)}$	On–State Drain Current	V_{GS} = 4.5 V, V_{DS} = 5 V	50			A
g_{FS}	Forward Transconductance	V_{DS} = 10 V, I_D = 19 A		75		S
Dynamic Characteristics						
C_{iss}	Input Capacitance	V_{DS} = 15 V, V_{GS} = 0 V, f = 1.0 MHz		5070		pF
C_{oss}	Output Capacitance			550		pF
C_{rss}	Reverse Transfer Capacitance			230		pF
Switching Characteristics (Note 2)						
$t_{d(on)}$	Turn–On Delay Time	V_{DD} = 10 V, I_D = 1 A, V_{GS} = 4.5 V, R_{GEN} = 6 Ω		17	25	ns
t_r	Turn–On Rise Time			18	25	ns
$t_{d(off)}$	Turn–Off Delay Time			69	100	ns
t_f	Turn–Off Fall Time			29	42	ns
Q_g	Total Gate Charge	V_{DS} = 15 V, I_D = 19 A, V_{GS} = 4.5 V		33	46	nC
Q_{gs}	Gate–Source Charge			7.5		nC
Q_{gd}	Gate–Drain Charge			6.8		nC
Drain–Source Diode Characteristics and Maximum Ratings						
I_S	Maximum Continuous Drain–Source Diode Forward Current				3.2	A
V_{SD}	Drain–Source Diode Forward Voltage	V_{GS} = 0 V, I_S = 3.2 A (Note 2)			1.2	V

Notes:

1. $R_{\theta JA}$ is the junction-to-ambient thermal resistance. $R_{\theta JA}$ depends on the user's board design.

a) 38°C/W when mounted on a 1in^2 pad of 2 oz copper

Dimensional Outline and Pad Layout

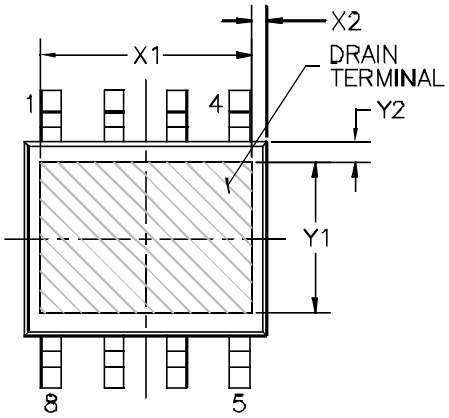

Bottom View

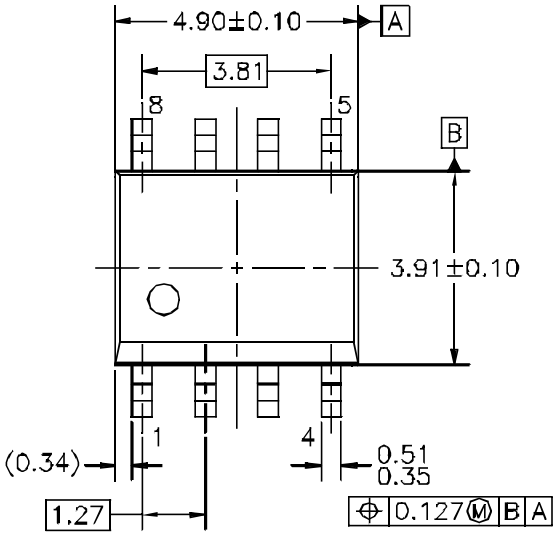

Top View

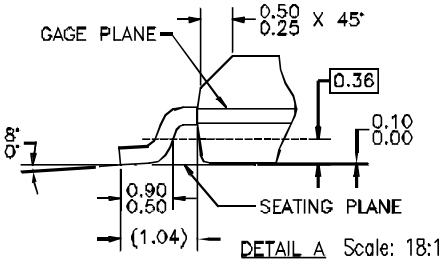

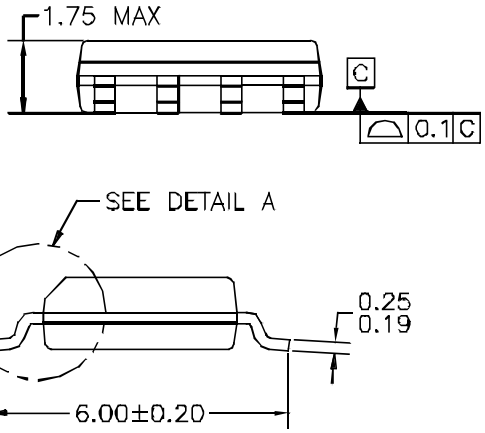

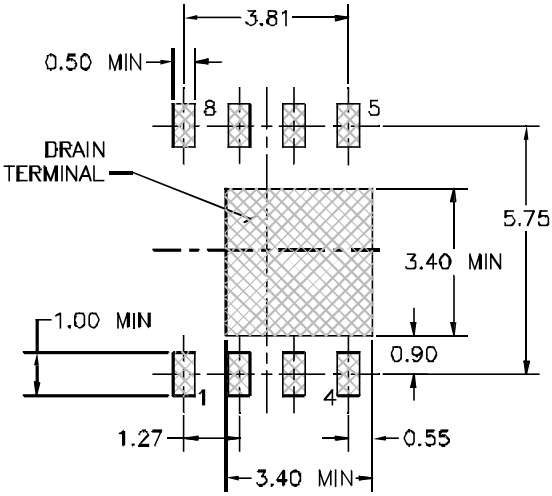

Minimum Recommended Landing Pattern

Notes: Unless otherwise Specified

a) All dimensions in mm

b) Standard lead finish:
20 – 80 μ inches nickel /
6 μ inches palladium

c) Chip Size Dimensional Table

Chip Size			
X1	**Y1**	**X2**	**Y2**
2.36	2.36	0.75	0.67

TRADEMARKS

The following are registered and unregistered trademarks Fairchild Semiconductor owns or is authorized to use and is not intended to be an exhaustive list of all such trademarks.

ACEx™
Bottomless™
CoolFET™
CROSSVOLT™
E^2CMOS™
FACT™
FACT Quiet Series™
FAST®
FASTr™
GTO™
HiSeC™
ISOPLANAR™
MICROWIRE™
POP™
PowerTrench®
QFET™
QS™
Quiet Series™
SuperSOT™-3
SuperSOT™-6
SuperSOT™-8
SyncFET™
TinyLogic™
UHC™
VCX™

DISCLAIMER

FAIRCHILD SEMICONDUCTOR RESERVES THE RIGHT TO MAKE CHANGES WITHOUT FURTHER NOTICE TO ANY PRODUCTS HEREIN TO IMPROVE RELIABILITY, FUNCTION OR DESIGN. FAIRCHILD DOES NOT ASSUME ANY LIABILITY ARISING OUT OF THE APPLICATION OR USE OF ANY PRODUCT OR CIRCUIT DESCRIBED HEREIN; NEITHER DOES IT CONVEY ANY LICENSE UNDER ITS PATENT RIGHTS, NOR THE RIGHTS OF OTHERS.

LIFE SUPPORT POLICY

FAIRCHILD'S PRODUCTS ARE NOT AUTHORIZED FOR USE AS CRITICAL COMPONENTS IN LIFE SUPPORT DEVICES OR SYSTEMS WITHOUT THE EXPRESS WRITTEN APPROVAL OF FAIRCHILD SEMICONDUCTOR CORPORATION.
As used herein:

1. Life support devices or systems are devices or systems which, (a) are intended for surgical implant into the body, or (b) support or sustain life, or (c) whose failure to perform when properly used in accordance with instructions for use provided in the labeling, can be reasonably expected to result in significant injury to the user.

2. A critical component is any component of a life support device or system whose failure to perform can be reasonably expected to cause the failure of the life support device or system, or to affect its safety or effectiveness.

PRODUCT STATUS DEFINITIONS

Definition of Terms

Datasheet Identification	Product Status	Definition
Advance Information	Formative or In Design	This datasheet contains the design specifications for product development. Specifications may change in any manner without notice.
Preliminary	First Production	This datasheet contains preliminary data, and supplementary data will be published at a later date. Fairchild Semiconductor reserves the right to make changes at any time without notice in order to improve design.
No Identification Needed	Full Production	This datasheet contains final specifications. Fairchild Semiconductor reserves the right to make changes at any time without notice in order to improve design.
Obsolete	Not In Production	This datasheet contains specifications on a product that has been discontinued by Fairchild semiconductor. The datasheet is printed for reference information only.

НИОКР СИСТЕМС

ООО «НИОКРсистемс» - это оперативные поставки широкого спектра электронных компонентов отечественного и импортного производства напрямую от производителей и с крупнейших мировых складов. Реализуемая нашей компанией продукция насчитывает более полумиллиона наименований.

Благодаря этому наша компания предлагает к поставке практически не ограниченный ассортимент компонентов как оптовыми, мелкооптовыми партиями, так и в розницу.

Благодаря развитой сети поставщиков, помогаем в поиске и приобретении экзотичных или снятых с производства компонентов.

Наша компания это:

- Гарантия качества поставляемой продукции
- Широкий ассортимент
- Минимальные сроки поставок
- Техническая поддержка
- Подбор комплектации
- Индивидуальный подход
- Гибкое ценообразование
- Работаем по 275 ФЗ

ООО «НИОКР СИТЕМС»
Москва, 125362, Россия, ул. Вишневая, д. 9, к. 1, Блок 104 а и 104 в

Телефон: 8 (495) 268-14-82
Email: n@nsistems.ru

ИНН: 7735154786
ОГРН: 1167746717709