# Series 448 Data Sheet
# Slide Potentiometer

## Commercial Linear Motion Carbon Composition Slide Potentiometer

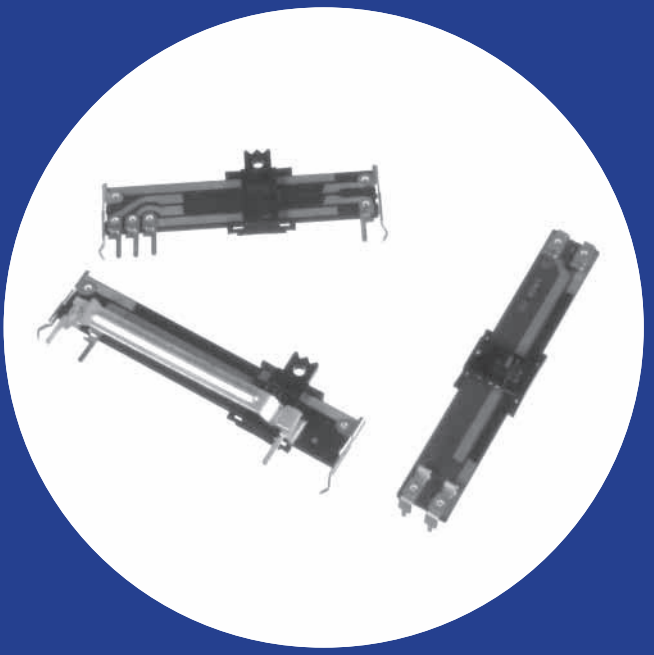

### Features

- 10-60mm slider travel
- Innovative AC power switch (SPST, SPDT)
- Center, Multiple detents available
- Single or dual element designs
- Economical
- Wide resistance range
- Slim construction
- RoHS Compliant

Patent No.: US: 5,959,525 , Taiwan: 204502.

## Electrical and Mechanical Specifications

**Resistance Range**
500 ohms through 1 megohms, linear
Consult CTS for audio taper

**Resistance Tolerance**
±30%, ±20%, ±10%

**Insulation Resistance**
10 Megohms minimum at 250 VDC

**Maxium Operating Voltage**

| Taper | 10mm | 15mm<br>20mm | 30mm | 45mm | 60mm |
|---|---|---|---|---|---|
| Linear | 100VDC | 150VDC<br>200VDC | 250VDC | 300VDC | 500VDC |
| Non-linear | 50VDC | 50VDC<br>150VDC | 200VDC | 250VDC | 300VDC |

**Power Rating, watts**

| Taper | 10mm | 15mm<br>20mm | 30mm | 45mm | 60mm |
|---|---|---|---|---|---|
| Linear | 0.05w | 0.1w | 0.2w | 0.25w | 0.5w |
| Non-linear | 0.025w | 0.05w | 0.1w | 0.15w | 0.25w |

**Power Switch (optional)**
SPST - 10,000 cycles carrying 1,000 watts 120 VAC (Tungsten-filament)
SPDT - 10,000 cycles carrying 600 watts 120 VAC (Tungsten-filament)

**Slide Travel**
Potentiometer without switch:
X and U Style: 10, 15, 20, 30, 45, and 60mm
V Style: 10, 15, 25, 40, and 55mm

Potentiometer with switch:
30mm = 27mm electrical + 3mm switch (SPST only)
20mm = 17mm electrical + 3mm switch

**Operating Force**
Potentiometer : 20-150 g
Switch : 100-500 g

**Stop Strength**
3K gf maximum, measured at base of slider

**Operating Life**
Standard : 10,000 cycles
Special : 100,000 , 250,000 cycles


© 2010 CTS Corporation. All rights reserved. Information subject to change.

## TYPE 448V MONO

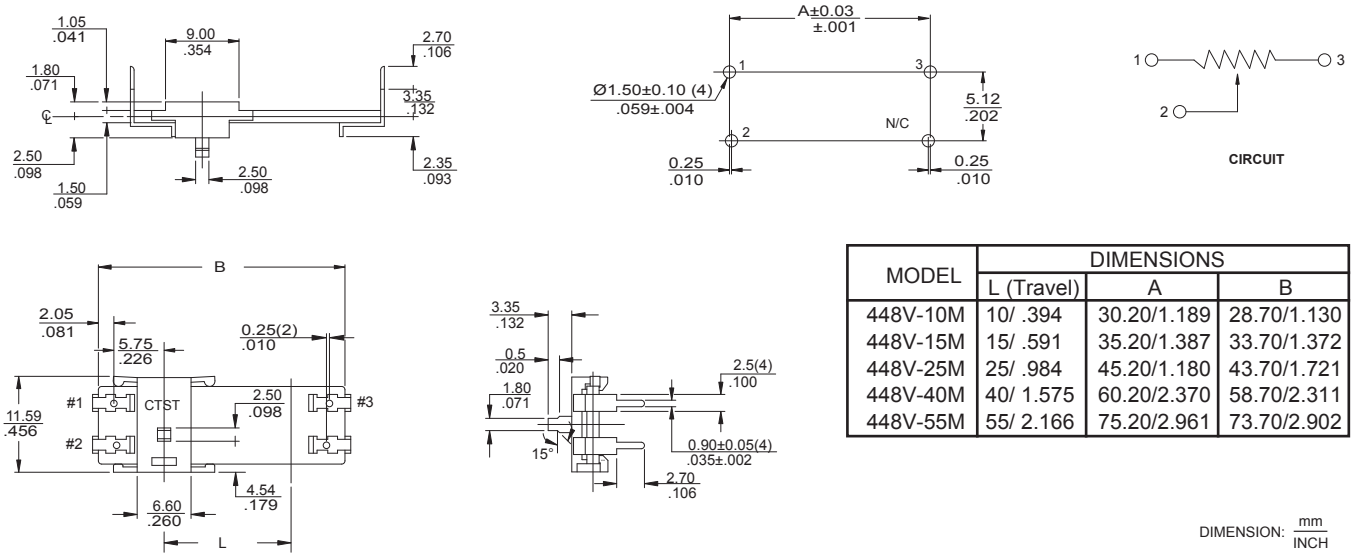


| MODEL | DIMENSIONS | | |
|---|---|---|---|
| | L (Travel) | A | B |
| 448V-10M | 10/ .394 | 30.20/1.189 | 28.70/1.130 |
| 448V-15M | 15/ .591 | 35.20/1.387 | 33.70/1.372 |
| 448V-25M | 25/ .984 | 45.20/1.180 | 43.70/1.721 |
| 448V-40M | 40/ 1.575 | 60.20/2.370 | 58.70/2.311 |
| 448V-55M | 55/ 2.166 | 75.20/2.961 | 73.70/2.902 |

DIMENSION: mm / INCH

## TYPE 448U MONO

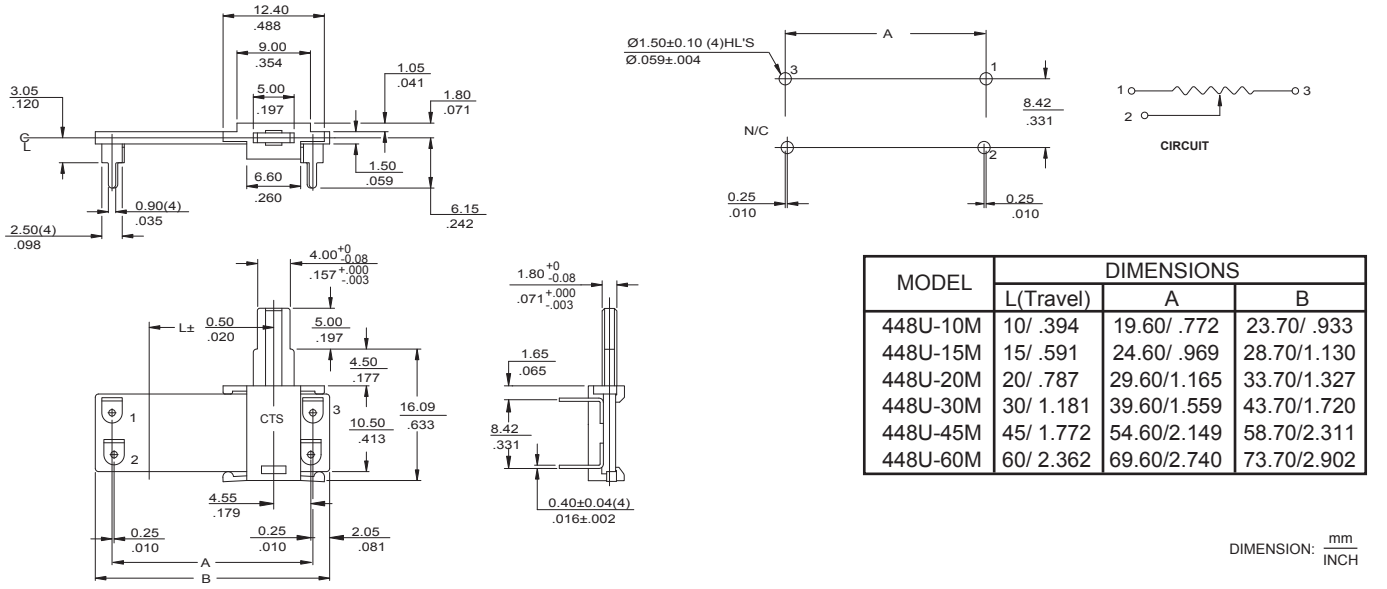


| MODEL | DIMENSIONS | | |
|---|---|---|---|
| | L(Travel) | A | B |
| 448U-10M | 10/ .394 | 19.60/ .772 | 23.70/ .933 |
| 448U-15M | 15/ .591 | 24.60/ .969 | 28.70/1.130 |
| 448U-20M | 20/ .787 | 29.60/1.165 | 33.70/1.327 |
| 448U-30M | 30/ 1.181 | 39.60/1.559 | 43.70/1.720 |
| 448U-45M | 45/ 1.772 | 54.60/2.149 | 58.70/2.311 |
| 448U-60M | 60/ 2.362 | 69.60/2.740 | 73.70/2.902 |

DIMENSION: mm / INCH

## TYPE 448U DUAL

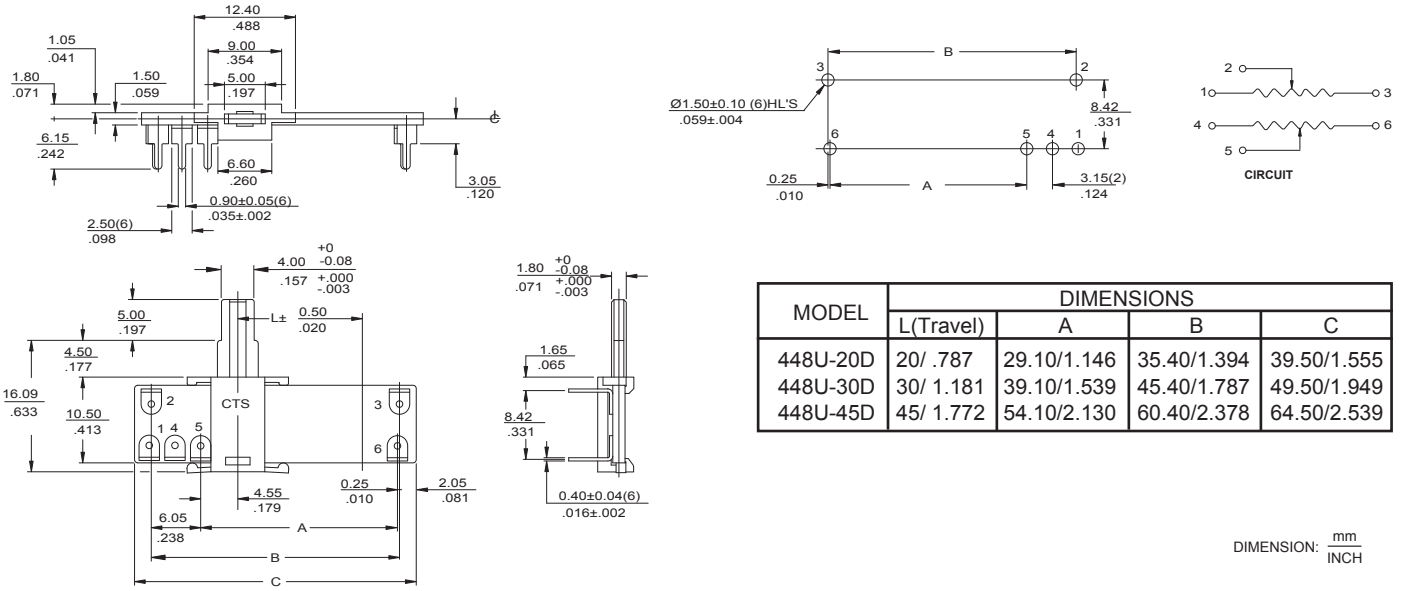


| MODEL | DIMENSIONS | | | |
|---|---|---|---|---|
| | L(Travel) | A | B | C |
| 448U-20D | 20/ .787 | 29.10/1.146 | 35.40/1.394 | 39.50/1.555 |
| 448U-30D | 30/ 1.181 | 39.10/1.539 | 45.40/1.787 | 49.50/1.949 |
| 448U-45D | 45/ 1.772 | 54.10/2.130 | 60.40/2.378 | 64.50/2.539 |

DIMENSION: mm / INCH


© 2010 CTS Corporation. All rights reserved. Information subject to change.

## TYPE 448X MONO

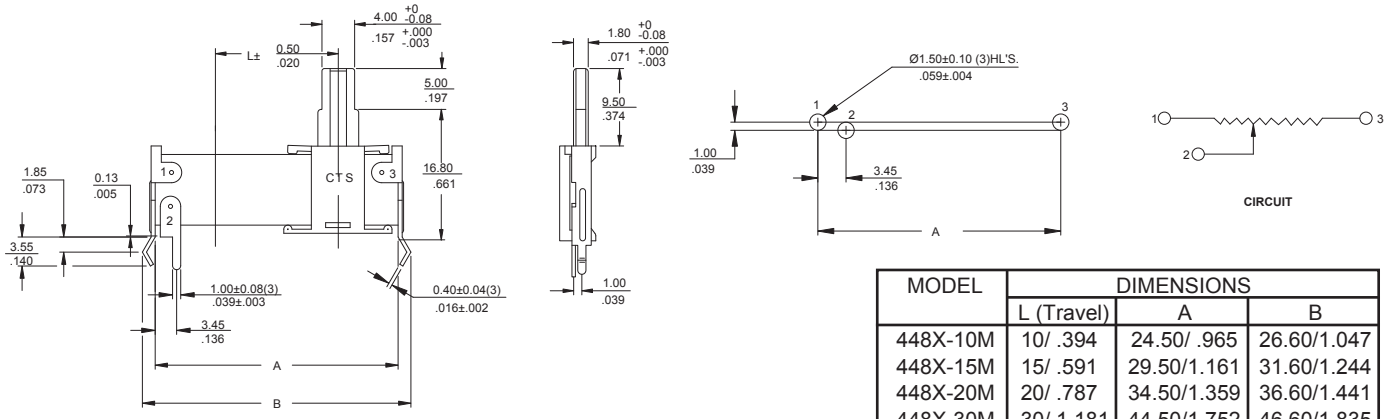


DIMENSION: mm / INCH

| MODEL | DIMENSIONS | | |
|---|---|---|---|
| | L (Travel) | A | B |
| 448X-10M | 10/ .394 | 24.50/ .965 | 26.60/1.047 |
| 448X-15M | 15/ .591 | 29.50/1.161 | 31.60/1.244 |
| 448X-20M | 20/ .787 | 34.50/1.359 | 36.60/1.441 |
| 448X-30M | 30/ 1.181 | 44.50/1.752 | 46.60/1.835 |
| 448X-45M | 45/ 1.772 | 59.50/2.343 | 61.60/2.425 |

## TYPE 448X DUAL

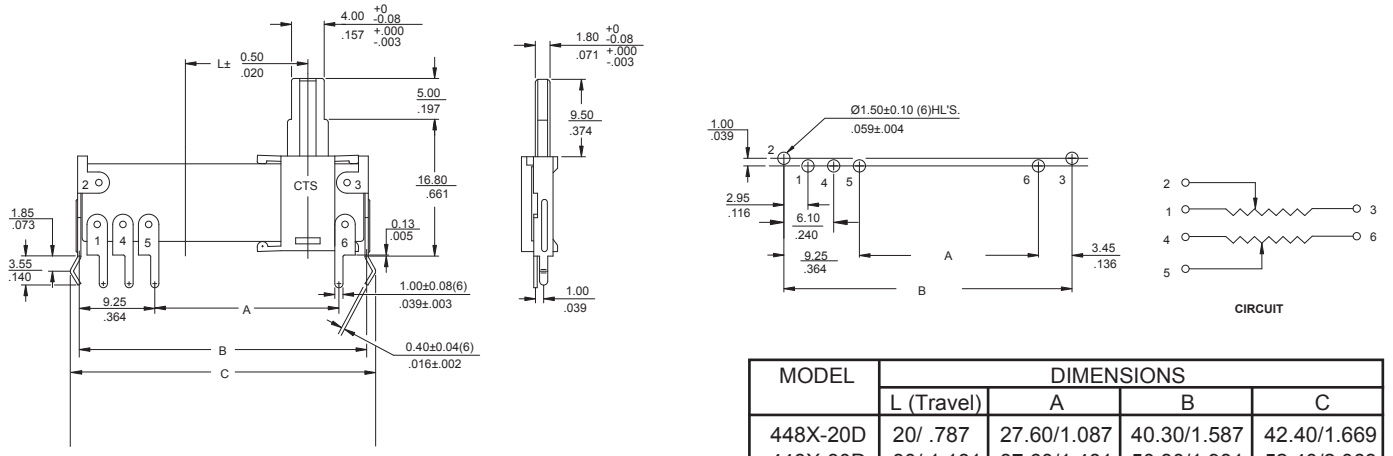


DIMENSION: mm / INCH

| MODEL | DIMENSIONS | | | |
|---|---|---|---|---|
| | L (Travel) | A | B | C |
| 448X-20D | 20/ .787 | 27.60/1.087 | 40.30/1.587 | 42.40/1.669 |
| 448X-30D | 30/ 1.181 | 37.60/1.481 | 50.30/1.981 | 52.40/2.063 |
| 448X-45D | 45/ 1.772 | 52.60/2.071 | 65.30/2.571 | 67.40/2.654 |

## TYPE 448X MONO W/SPST SWITCH

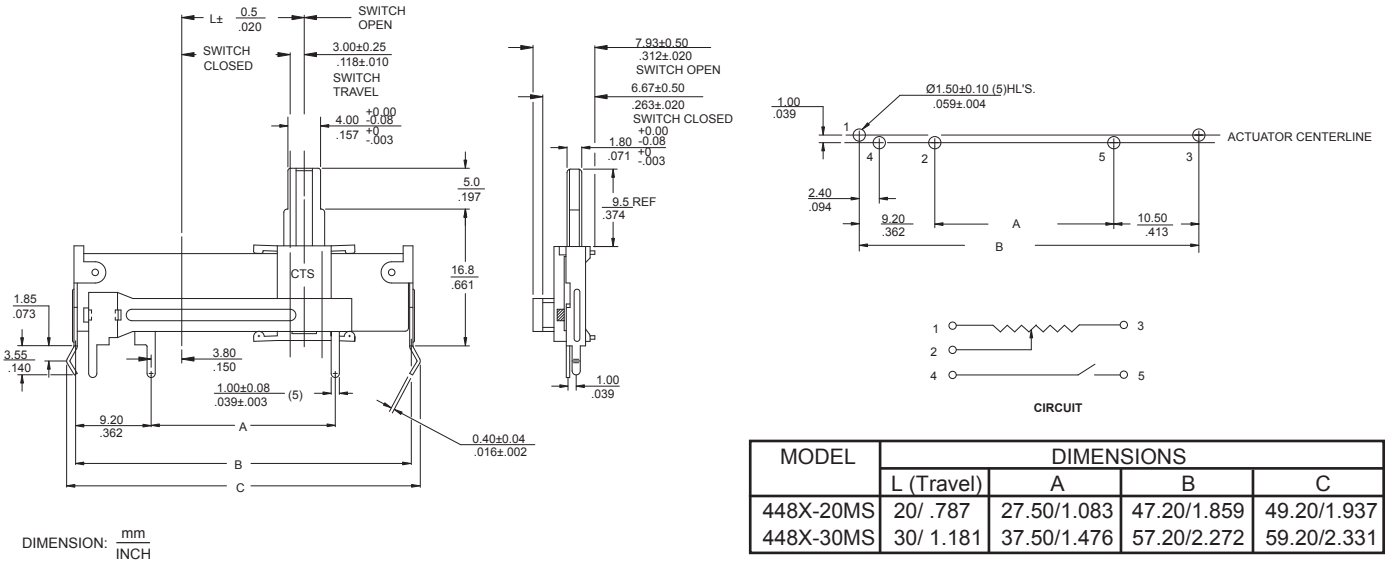


DIMENSION: mm / INCH

| MODEL | DIMENSIONS | | | |
|---|---|---|---|---|
| | L (Travel) | A | B | C |
| 448X-20MS | 20/ .787 | 27.50/1.083 | 47.20/1.859 | 49.20/1.937 |
| 448X-30MS | 30/ 1.181 | 37.50/1.476 | 57.20/2.272 | 59.20/2.331 |


© 2010 CTS Corporation. All rights reserved. Information subject to change.

## TYPE 448X MONO W/SPDT SWITCH (with style A actuator only)

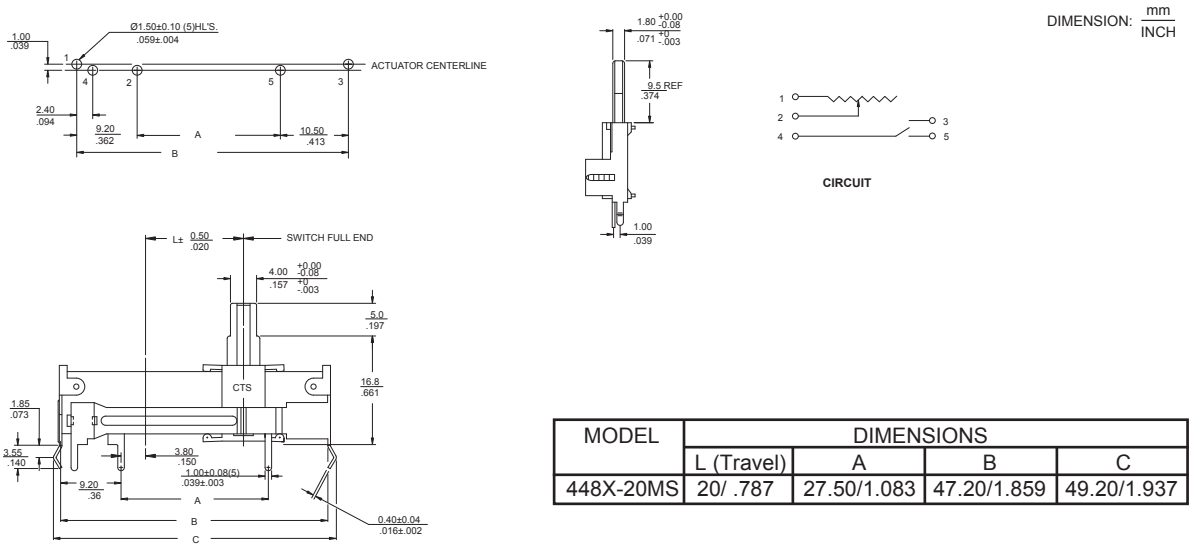


| MODEL | DIMENSIONS | | | |
|---|---|---|---|---|
| | L (Travel) | A | B | C |
| 448X-20MS | 20/ .787 | 27.50/1.083 | 47.20/1.859 | 49.20/1.937 |

## 448 Series Actuator Styles

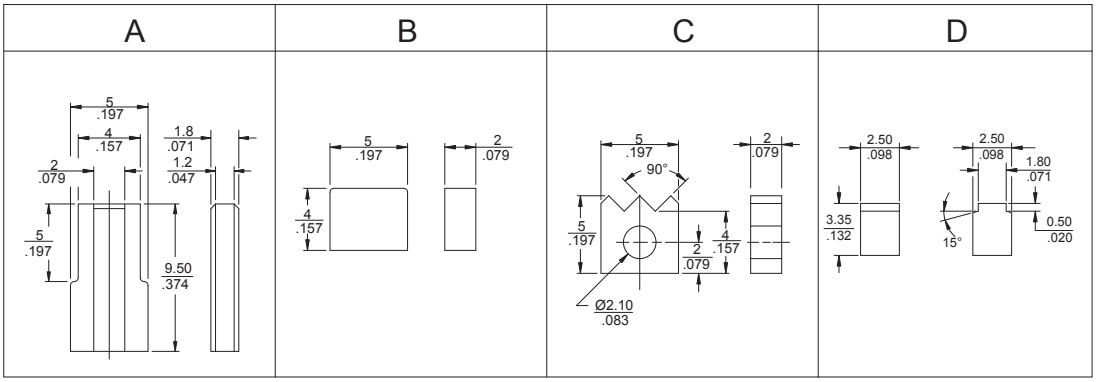


## Ordering Information

**448 U E 2 102 B D N**

**MOUNTING STYLE**
- **U-** ACTUATOR PARALLEL TO PC BOARD
- **X-** ACTUATOR PERPENDICULAR TO PC BOARD
- **V-** ACTUATOR (Low Profile) PERPENDICULAR TO PCB (mono only)

**TRAVEL**

| U & X TYPES | V-TYPE |
|---|---|
| **A-** 10mm | **A-** 10mm |
| **B-** 15mm | **B-** 15mm |
| **C-** 20mm | **C-** 25mm |
| **D-** 30mm | **D-** 40mm |
| **E-** 45mm | **E-** 55mm |
| **F-** 60mm | |

**ACTUATOR STYLE**

| U & X TYPES | V-TYPE |
|---|---|
| **2-** STYLE A: 9.5mm | **1-** STYLE D: 3.35mm |
| **3-** STYLE B: 4.0mm | |
| **4-** STYLE C: 5.0mm | |

**RESISTANCE CODE (EXAMPLES)**

| CODE | RESISTANCE |
|---|---|
| **501** | 500 ohms |
| **102** | 1K |
| **252** | 2.5K |
| **502** | 5K |
| **103** | 10K |
| **253** | 25K |
| **503** | 50K |
| **104** | 100K |

**RESISTANCE TOLERANCE**
- **A-** ±10%
- **B-** ±20%
- **C-** ±30%

**TAPER**
- **D-** LINEAR
- **A-** CW 10% AUDIO
- **B-** CCW 10% AUDIO

**SPECIALS**
- **N-** NO SPECIALS
- **C-** CENTER DETENT
- **M-** MULTIPLE DETENTS (30mm only)
- **S-** SPST POWER SWITCH (20 & 30mm, X type only)
- **D-** SPDT POWER SWITCH (20 mm, X type and 9.5mm actuator only)

Consult CTS for dual resistance element, customized, or not listed features.


© 2010 CTS Corporation. All rights reserved. Information subject to change.

НИОКР СИСТЕМС

**ООО «НИОКРсистемс» -** это оперативные поставки широкого спектра электронных компонентов отечественного и импортного производства напрямую от производителей и с крупнейших мировых складов. Реализуемая нашей компанией продукция насчитывает более полумиллиона наименований.

Благодаря этому наша компания предлагает к поставке практически не ограниченный ассортимент компонентов как оптовыми, мелкооптовыми партиями, так и в розницу.

Благодаря развитой сети поставщиков, помогаем в поиске и приобретении экзотичных или снятых с производства компонентов.

## Наша компания это:

- Гарантия качества поставляемой продукции
- Широкий ассортимент
- Минимальные сроки поставок
- Техническая поддержка
- Подбор комплектации
- Индивидуальный подход
- Гибкое ценообразование
- Работаем по 275 ФЗ

ООО «НИОКР СИТЕМС»
Москва, 125362, Россия, ул. Вишневая, д. 9, к. 1, Блок 104 а и 104 в

Телефон: 8 (495) 268-14-82
Email: n@nsistems.ru

ИНН: 7735154786
ОГРН: 1167746717709