SERIES 100 SWITCHES

TOGGLE SWITCHES - MINIATURE

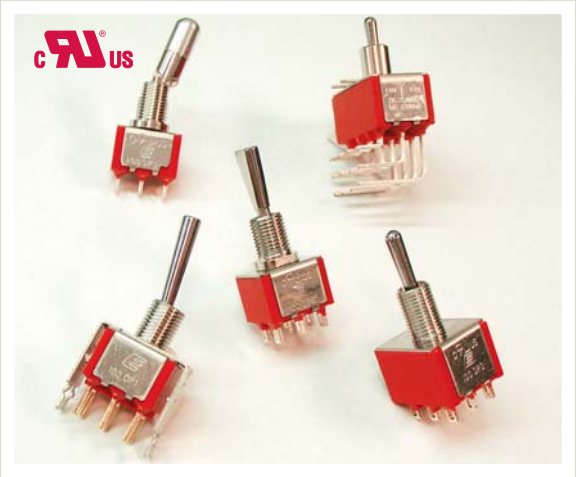

SPECIFICATIONS

Contact Rating:	See contact material options
Life Expectancy:	40,000 make-and-break cycles at full load
Contact Resistance:	100 mΩ max. typical initial @ 2-4 VDC 100 mA for both silver and gold plated contacts
Insulation Resistance:	1,000 MΩ min.
Dielectric Strength:	1,000 V RMS @ sea level
Operating Temperature:	-30° C to 85° C

MATERIALS

Case:	Diallyl Phthalate (DAP)
Toggle Handle:	Brass, chrome plated
Switch Support:	Brass or steel, tin plated
Bushing:	Brass, nickel plated
Housing:	Stainless steel
Contacts / Terminals:	Silver or gold plated copper alloy

FEATURES & BENEFITS

- Up to 4 poles available
- Variety of switching functions
- Miniature
- Multiple actuator & bushing options

APPLICATIONS/MARKETS

- Telecommunications
- Instrumentation
- Networking
- Medical equipment

HOW TO ORDER

SERIES	MODEL NO.	ACTUATOR	BUSHING	TERMINATION	CONTACT MATERIAL	SEAL	HARDWARE
100	SP1 SP2* SP3 SP4* SP5* DP1 DP2* DP3 DP4* DP5* DP6 DP7* DP8* 3P1 3P2* 3P3 3P4* 3P5* 4P1 4P2* 4P3 4P4* 4P5* 4P6 4P7* 4P8*	T1† T2 T3 T4 T5 T6 T7 T8 T9 K1 K2 † Optional Toggle Cap (T1 Only): T100-1 = White T100-2 = Black	B1 B2 B3 B4 B5 B6 B8 B9 B11 B12 B13 B15 B16 B25** B26**	M1 M2 M3 M5 M6 M61 M7 M71 VS2 VS3 VS5* M64* VS21* VS31*	Q = Silver R = Gold	E = Epoxy Sealed at Base of Terminal	H = Hardware

Example Ordering Number

100–SP1–T4–B2–M1–R–E

Notes: * Not available with the K1 and K2 actuator options.
** Available only with the K1 and K2 actuator options.

Specifications subject to change without notice.

E•SWITCH®
Phone: 800-867-2717
Fax: 763-531-8235

SPDT

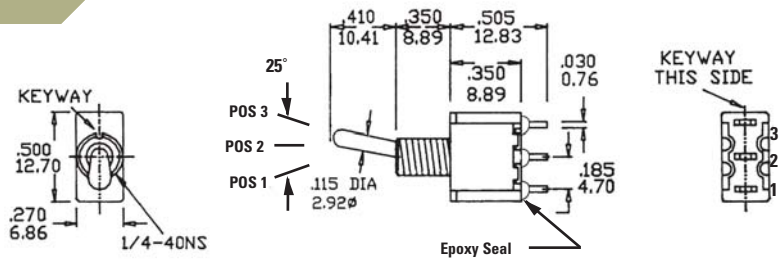

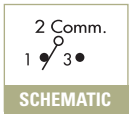

SCHEMATIC

Model No.	POS 1	POS 2	POS 3
SP-1	ON	NONE	ON
SP-2	ON	NONE	(ON)
SP-3	ON	OFF	ON
SP-4	(ON)	OFF	(ON)
SP-5	ON	OFF	(ON)
Term. Comm.	2-3	OPEN	2-1

( ) = Momentary

DPDT

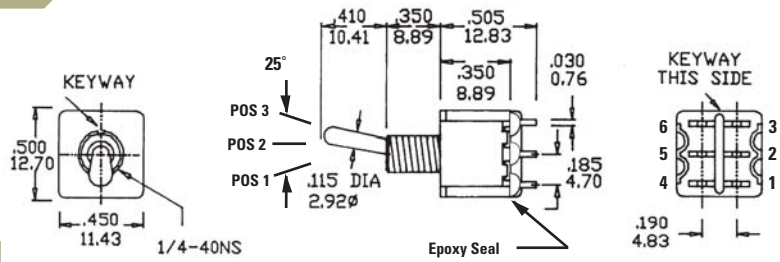

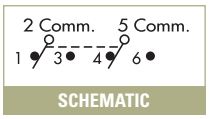

SCHEMATIC

Model No.	POS 1	POS 2	POS 3
DP-1	ON	NONE	ON
DP-2	ON	NONE	(ON)
DP-3	ON	OFF	ON
DP-4	(ON)	OFF	(ON)
DP-5	ON	OFF	(ON)
DP-7	ON	ON	(ON)
DP-8	(ON)	ON	(ON)
Term. Comm.	2-3, 5-6	OPEN	2-1, 5-4
DP-6	ON	ON	ON
Term. Comm.	2-3, 5-6	2-3, 5-4	2-1, 5-4

( ) = Momentary

3PDT

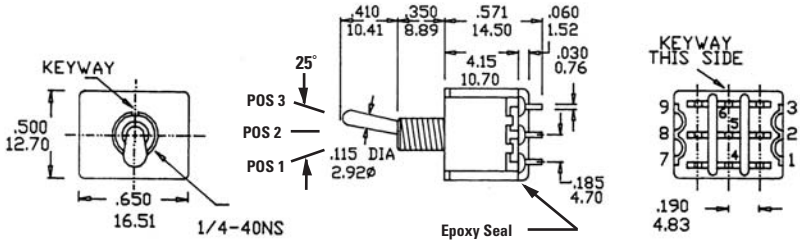

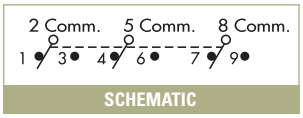

SCHEMATIC

Model No.	POS 1	POS 2	POS 3
3P-1	ON	NONE	ON
3P-2	ON	NONE	(ON)
3P-3	ON	OFF	ON
3P-4	(ON)	OFF	(ON)
3P-5	ON	OFF	(ON)
Term. Comm.	2-3, 5-6 8-9	OPEN	2-1, 5-4 8-7

( ) = Momentary

4PDT

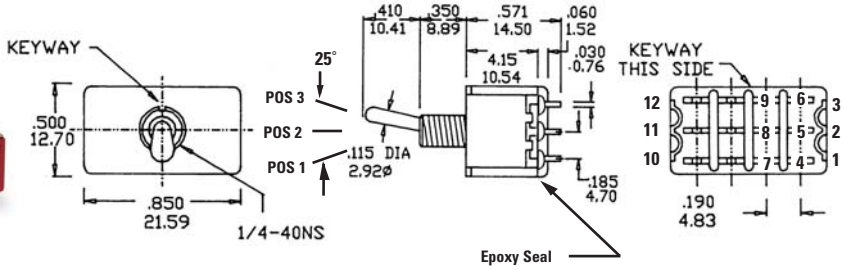

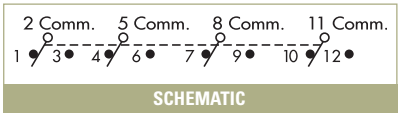

SCHEMATIC

Model No.	POS 1	POS 2	POS 3
4P-1	ON	NONE	ON
4P-2	ON	NONE	(ON)
4P-3	ON	OFF	ON
4P-4	(ON)	OFF	(ON)
4P-5	ON	OFF	(ON)
4P-7	ON	ON	(ON)
4P-8	(ON)	ON	(ON)
Term. Comm.	2-3, 5-6 8-9 11-12	OPEN	2-1, 5-4 8-7 11-10
4P-6	ON	ON	ON
Term. Comm.	2-3, 5-6 8-9 11-12	2-3, 5-4 8-9 11-10	2-1, 5-4 8-7 11-10

( ) = Momentary

SERIES 100 SWITCHES

TOGGLE SWITCHES - MINIATURE

3 - WAY WIRING DIAGRAM SCHEMATICS

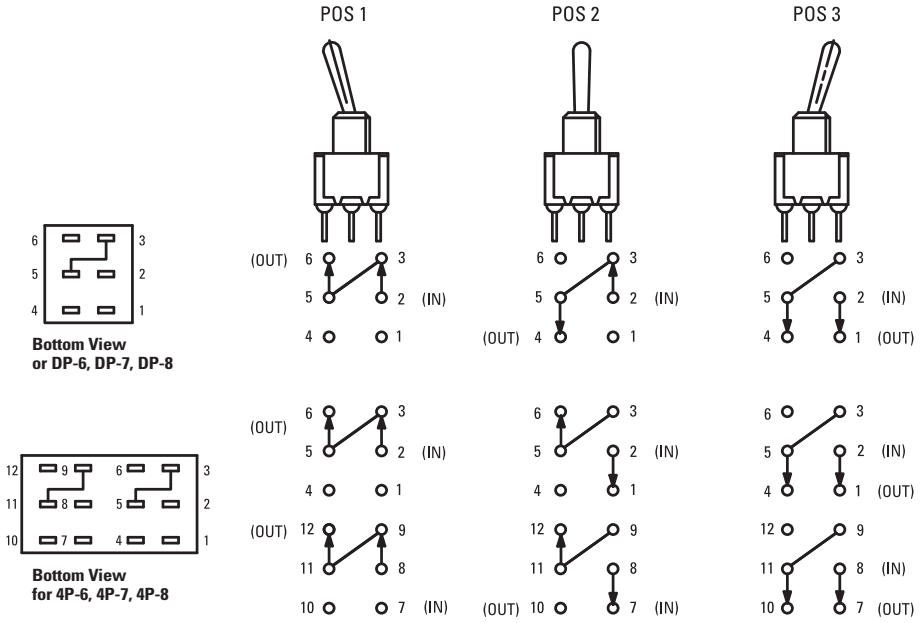

ACTUATOR OPTIONS

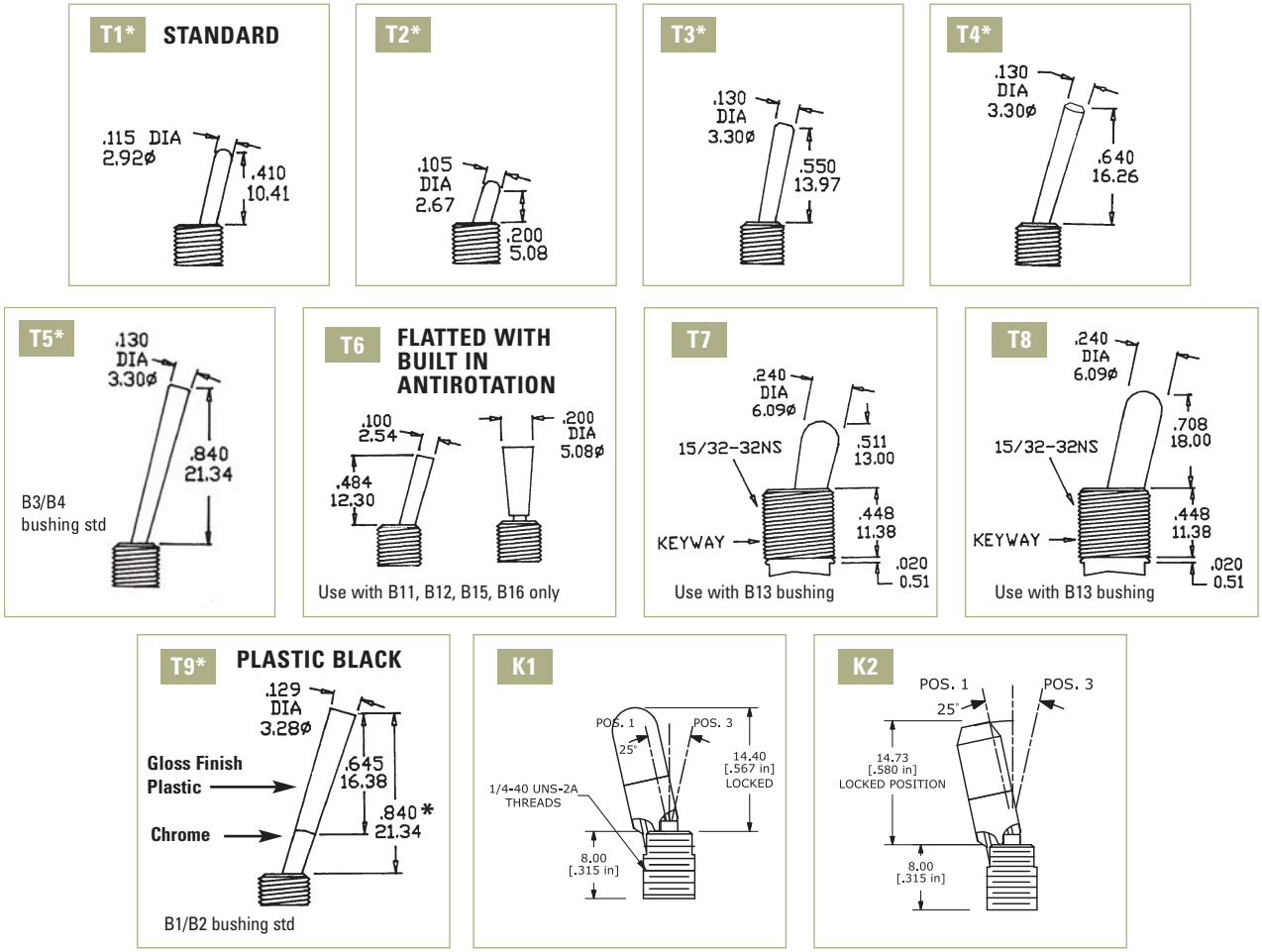

*Add .070 (1.78) for B3, B4 bushings, subtract .020 (0.51) for B6 bushing.

E•SWITCH®
Phone: 800-867-2717
Fax: 763-531-8235

BUSHING OPTIONS

B1 THD STD

B2 NON-THD

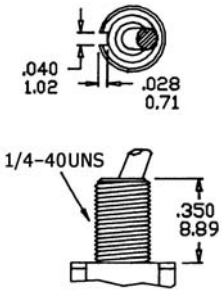

B3 THD STD

B4 NON-THD

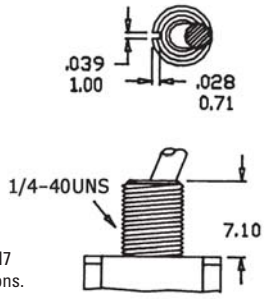

B4 is standard for M6, M7 and VS termination options.

B5 HIGH TORQUE

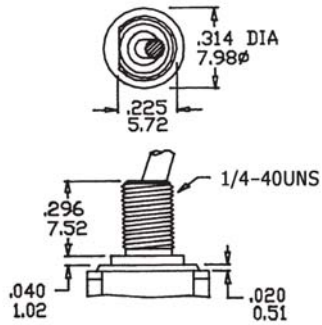

B6 HIGH TORQUE

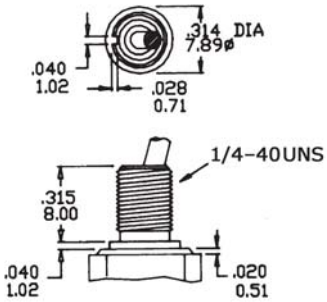

B8 METRIC THD

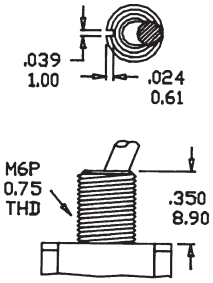

B9 SPLASH PROOF

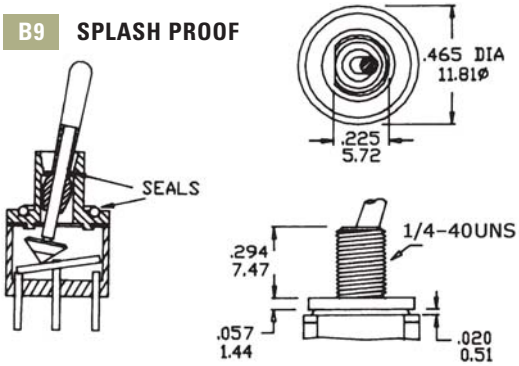

B13

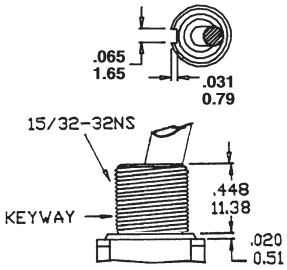

Use with T7 and T8 actuators only

B11 THD STD

B12 NON-THD

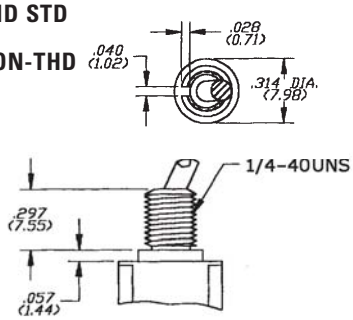

Use with T6 actuator only

B15 THD STD

B16 NON-THD

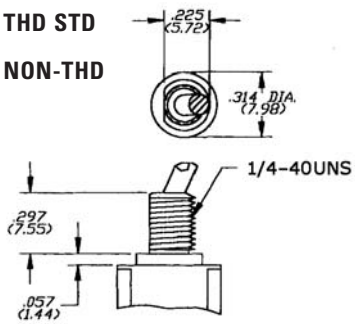

Use with T6 actuator only

B25

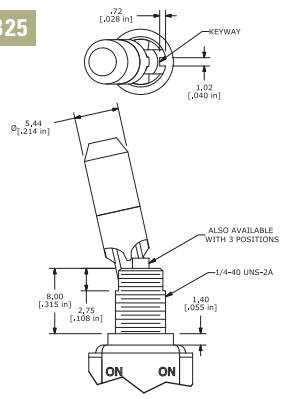

B26

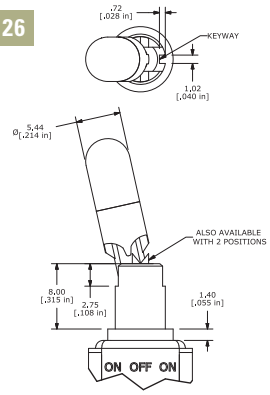

SERIES 100 SWITCHES

TOGGLE SWITCHES - MINIATURE

BUSHING OPTIONS - PANEL MOUNTING

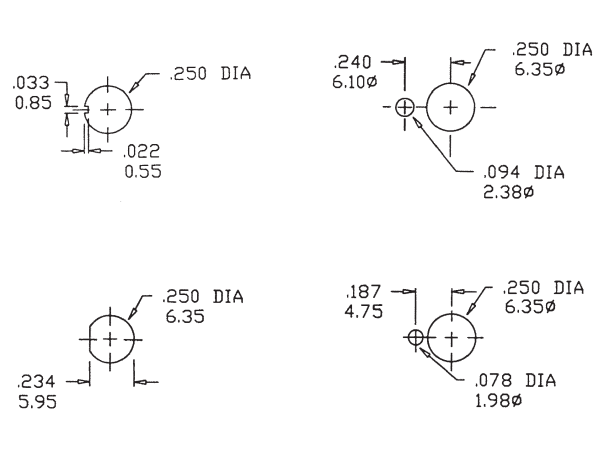

1/4 IN. BUSHING

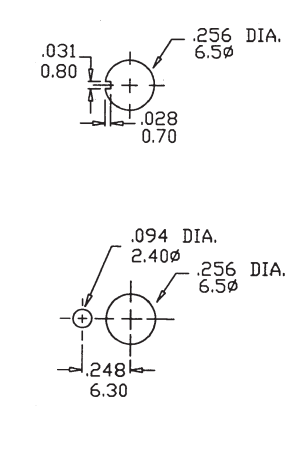

METRIC BUSHING

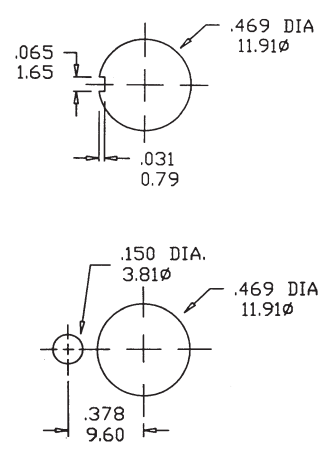

15/32 IN. BUSHING

TERMINATION OPTIONS

M2

SPDT

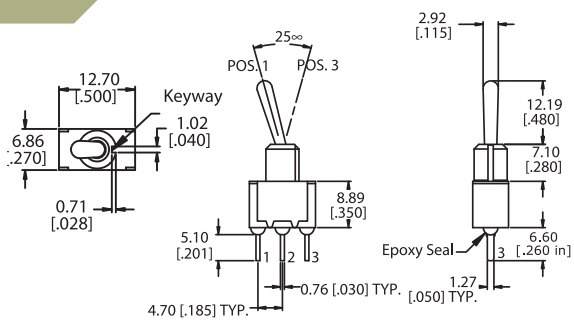

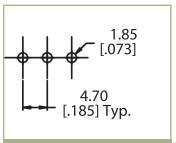

P.C. MOUNTING

M1 SOLDER LUG

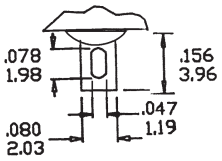

M3 QUICK CONNECT

Mating Quick Connector
Amp P/N 61454-1

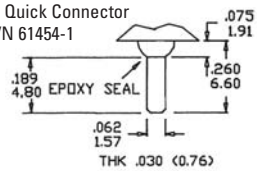

M2

DPDT

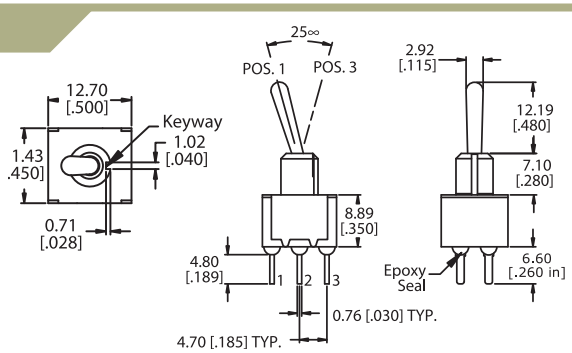

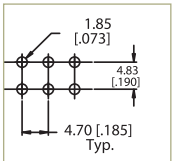

P.C. MOUNTING

M5 WIRE WRAP

Option Code	Dim. 'A'
M51	.750 (18.7)
M52	.964 (24.48)
M53	.425 (10.80)
M54	1.062 (26.97)

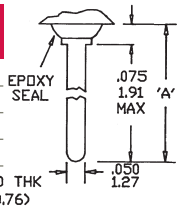

M6

SPDT

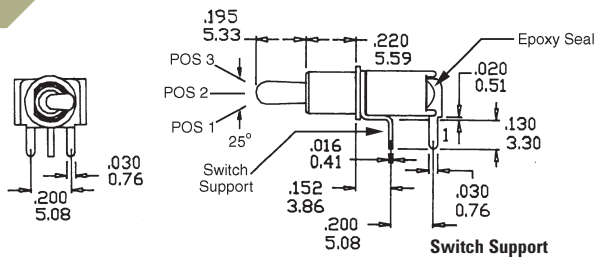

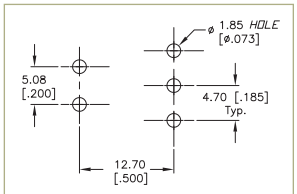

P.C. MOUNTING

M6

DPDT

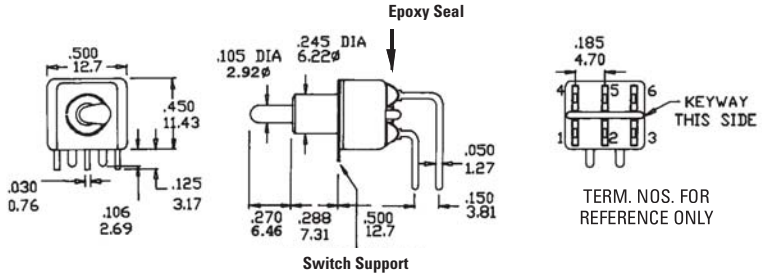

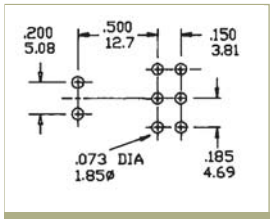

P.C. MOUNTING

M7

SPDT

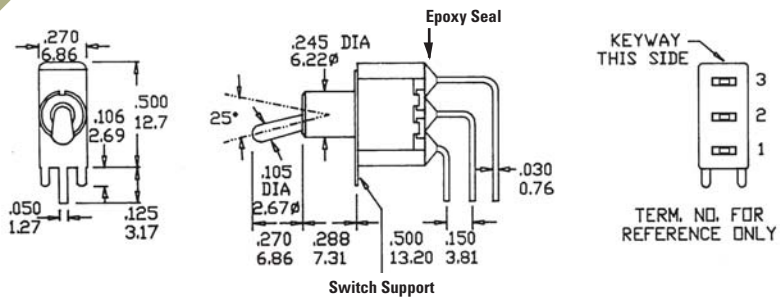

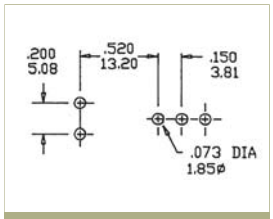

P.C. MOUNTING

M7

DPDT

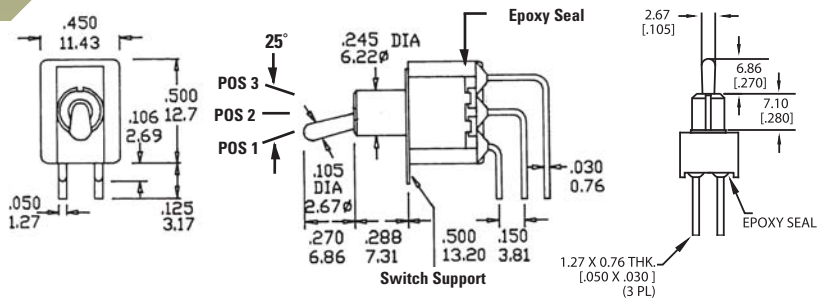

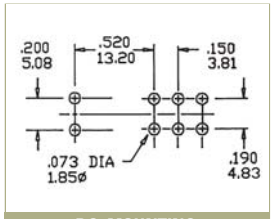

P.C. MOUNTING

M7

3PDT

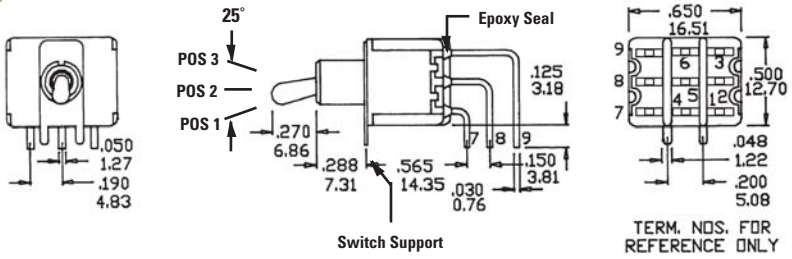

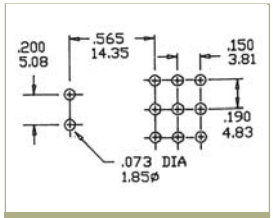

P.C. MOUNTING

M7

4PDT

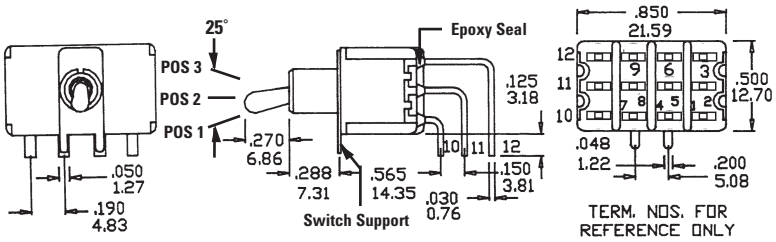

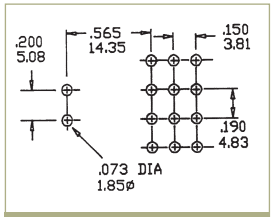

P.C. MOUNTING

SERIES 100 SWITCHES

TOGGLE SWITCHES - MINIATURE

VS2-VS3

SPDT

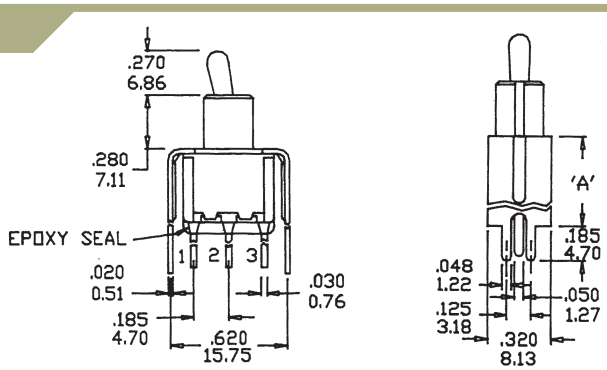

Option Code	Dim. 'A'
VS2	.460 (11.68)
VS3	.630 (16.00)

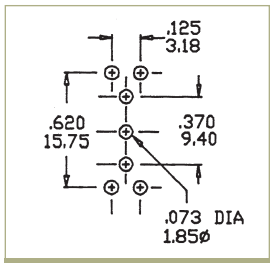

P.C. MOUNTING

VS2-VS3

DPDT

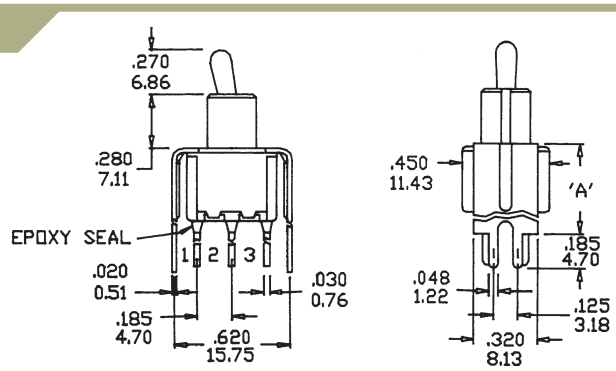

Option Code	Dim. 'A'
VS2	.460 (11.68)
VS3	.630 (16.00)

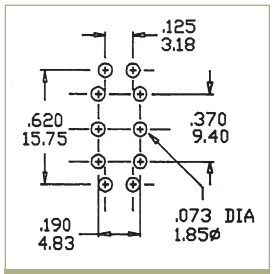

P.C. MOUNTING

VS5

DPDT

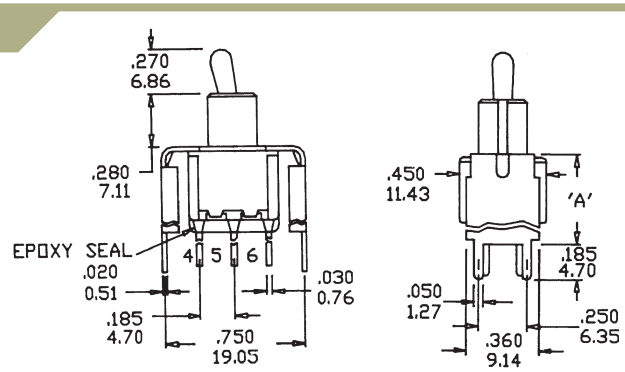

Option Code	Dim. 'A'
VS5	.630 (16.00)

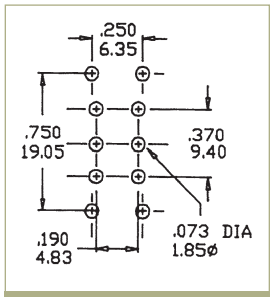

P.C. MOUNTING

M61

SPDT

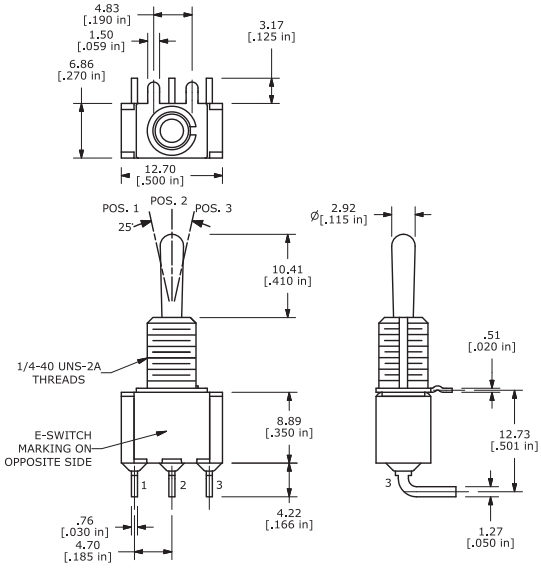

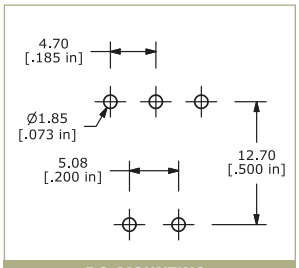

P.C. MOUNTING

E•SWITCH®
Phone: 800-867-2717
Fax: 763-531-8235

M61

DPDT

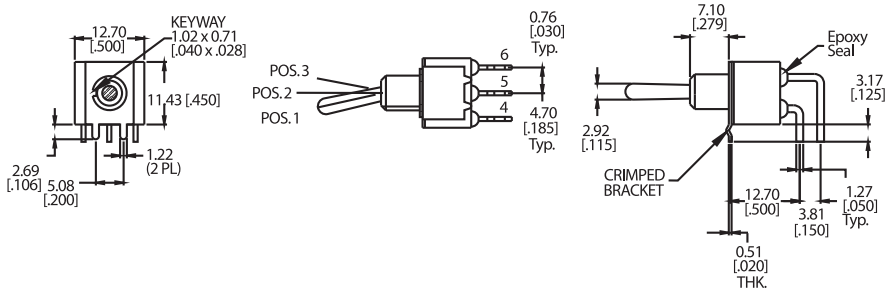

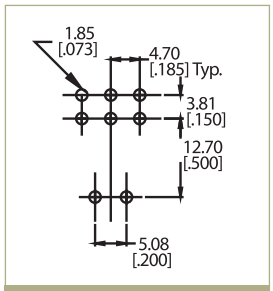

P.C. MOUNTING

M71

SPDT

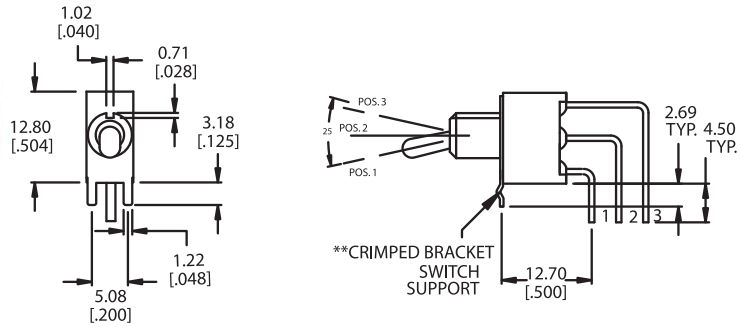

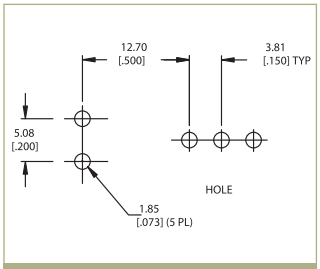

P.C. MOUNTING

M64

SPDT

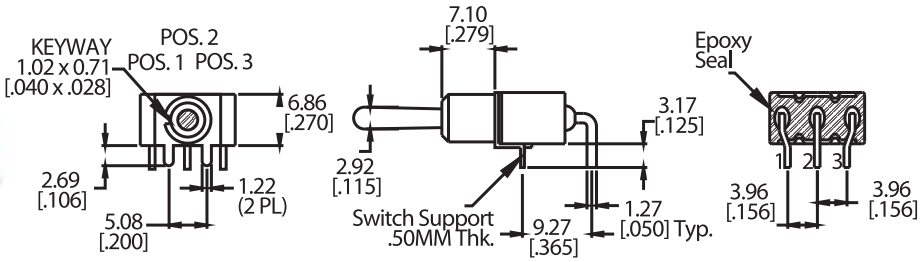

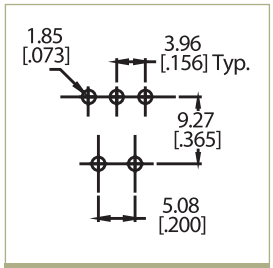

P.C. MOUNTING

SERIES 100 SWITCHES

TOGGLE SWITCHES - MINIATURE

VS21-VS31

SPDT

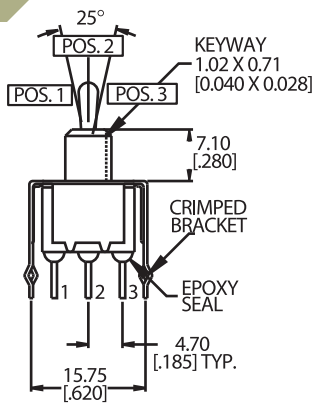

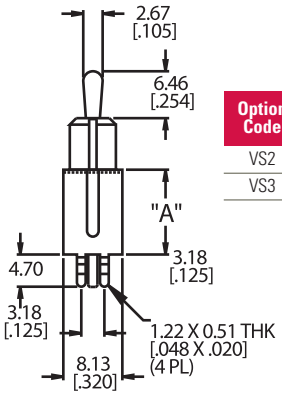

Option Code	Dim. 'A'
VS2	.460 (11.68)
VS3	.630 (16.00)

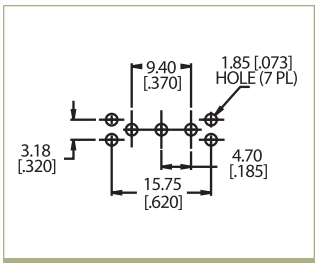

P.C. MOUNTING

VS21-VS31

DPDT

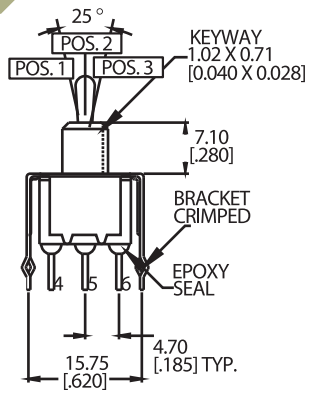

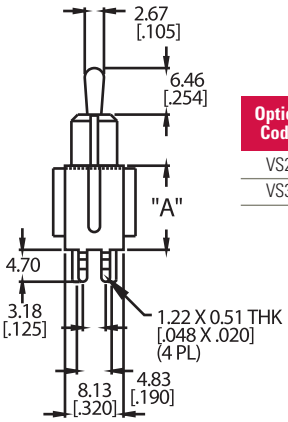

Option Code	Dim. 'A'
VS2	.460 (11.68)
VS3	.630 (16.00)

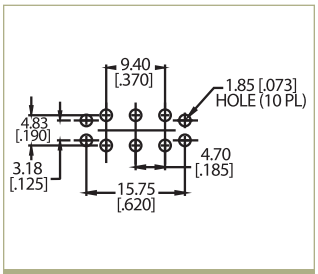

P.C. MOUNTING

OPTIONAL TOGGLE CAP

Use with T1
T100-1 WHITE
T100-2 BLACK

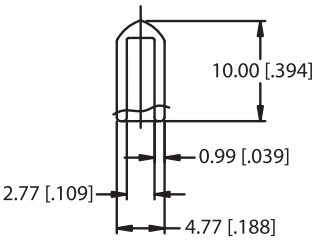

CONTACT MATERIAL OPTIONS

Q

Fixed Terminal:	Silver plated over copper alloy
Moving Contact:	Silver plated over copper alloy
Rating:	5 Amps with resistive load @ 120VAC or 28VDC; 2 Amps with resistive load @ 250VAC

R

Fixed Terminal:	Copper alloy with gold plate over nickel plate
Moving Contact:	Copper alloy with gold plate over nickel plate
Rating:	0.4 Volt-Amps (VA) max. @ 20V max. (AC or DC)

HARDWARE

HDW2 1/4 IN. NUTS

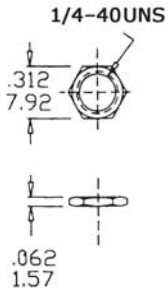

Supplied standard with
B1, B3, B5, B6 and B9 options

HDW3 BLIND DRESSNUT

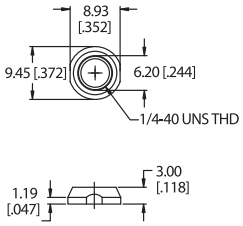

HDW6 METRIC NUT

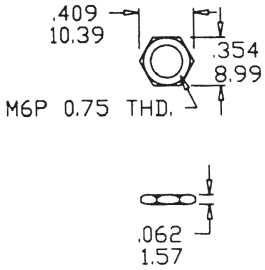

Supplied standard with B8
metric bushing

HDW11 LOCK WASHER

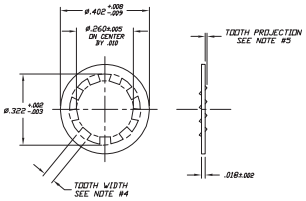

Supplied standard with B1/B3
bushing

Optional Rubber Hood Sealing E1

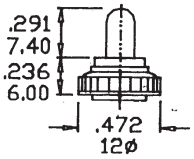

E1= Inch (Std.) for actuator T1, T2 and bushings
B1, B3, B5, B6 Optional rubber boot sealing

HDW4 15/32 IN. NUTS

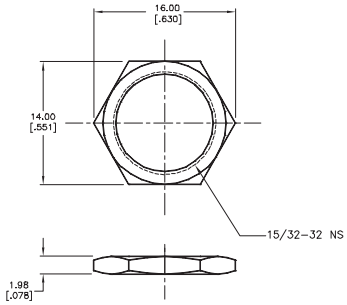

Supplied standard with B13 bushing

HDW12 LOCK WASHER

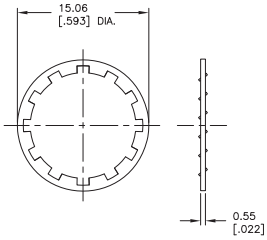

Supplied standard with B13 bushing

HDW15 LOCKING RING

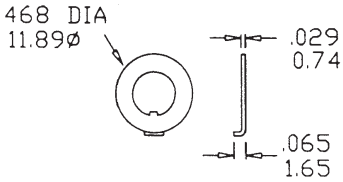

Supplied standard

HDW16 LOCKING RING

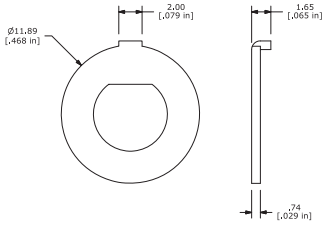

Supplied with B5 bushing

HDW17 LOCKING RING

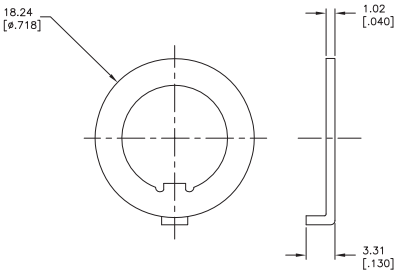

Supplied with B13 bushing

НИОКР СИСТЕМС

ООО «НИОКРсистемс» - это оперативные поставки широкого спектра электронных компонентов отечественного и импортного производства напрямую от производителей и с крупнейших мировых складов. Реализуемая нашей компанией продукция насчитывает более полумиллиона наименований.

Благодаря этому наша компания предлагает к поставке практически не ограниченный ассортимент компонентов как оптовыми, мелкооптовыми партиями, так и в розницу.

Благодаря развитой сети поставщиков, помогаем в поиске и приобретении экзотичных или снятых с производства компонентов.

Наша компания это:

- Гарантия качества поставляемой продукции
- Широкий ассортимент
- Минимальные сроки поставок
- Техническая поддержка
- Подбор комплектации
- Индивидуальный подход
- Гибкое ценообразование
- Работаем по 275 ФЗ

ООО «НИОКР СИТЕМС»
Москва, 125362, Россия, ул. Вишневая, д. 9, к. 1, Блок 104 а и 104 в

Телефон: 8 (495) 268-14-82
Email: n@nsistems.ru

ИНН: 7735154786
ОГРН: 1167746717709