19-1736; Rev 0; 7/00

MAXIM

Triple/Dual-Mode CDMA LNA/Mixers

General Description

The MAX2323/MAX2325 are low-noise amplifier (LNA) plus mixer ICs optimized for code-division multiple-access (CDMA) applications in both cellular and PCS bands. The MAX2323 addresses dual-band, triple-mode CDMA applications by providing switched signal paths for cellular FM, cellular CDMA, and PCS CDMA. The MAX2325 is a cellular-band dual-mode version.

To optimize cellular-band dynamic range at minimum current, the MAX2323/MAX2325 implement four LNA states: high gain/high linearity, high gain/low linearity, midgain, and low gain. In high-gain/high-linearity mode, the adjustable high-intercept LNA minimizes desensitization in the presence of a large interfering signal. For the other gain states, the LNA current is reduced to improve standby time.

The CDMA mixers are designed for high linearity, low noise, and differential IF outputs, while the FM mixer is designed for lower current and single-ended output. Each band is implemented with a separate mixer to optimize performance for the specific band.

The MAX2323/MAX2325 can also be used in TDMA, EDGE, and W-CDMA phones.

Applications

Dual-Band, Triple-Mode PCS/Cellular Phones

Dual-Mode Cellular Phones

Typical Application Circuits appear at end of data sheet.

Features

- **2.7V Operation**
- **Dual Band, Triple Mode**
- **Three LNA Gain Settings (Cellular)**
- **Two LNA Gain Settings (PCS)**
- **18mA in Low-Gain Mode**
  19.5mA in Paging and Midgain Mode
  26.5mA in High-Gain, High-Linearity Mode
  16.5mA in FM Mode, High-Gain, Low-Linearity Mode
- **2.5dB (typ) Cascade Noise Figure**
- **Adjustable LNA IIP3, +5dBm to +13dBm**
- **Ultra-Small 28-Pin Package (5mm x 5mm)**

Ordering Information

PART	TEMP. RANGE	PIN- PACKAGE
MAX2323EGI	-40°C to +85°C	28 QFN
MAX2325EGI	-40°C to +85°C	28 QFN
MAX2323EVKIT	-40°C to +85°C	28 QFN

Pin Configuration/ Functional Diagram

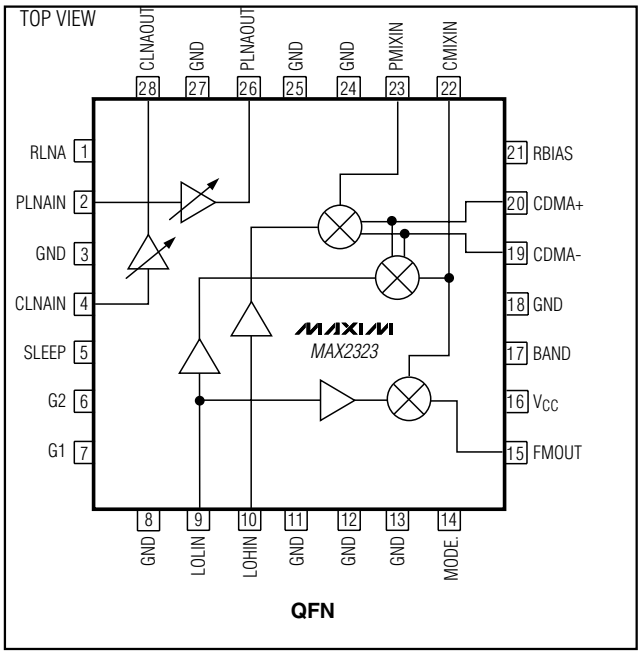

QFN

For free samples and the latest literature, visit www.maxim-ic.com or phone 1-800-998-8800. For small orders, phone 1-800-835-8769.

Triple/Dual-Mode CDMA LNA/Mixers

ABSOLUTE MAXIMUM RATINGS

V_{CC} to GND .....0.3V, +4.3V
Digital Input Voltage to GND .....-0.3V to (V_{CC} + 0.3V)
LNA Input Level 1Vp
LO, Mixer Input Levels .....+5dBm
Digital Input Current .....±10mA
Continuous Power Dissipation (T_A = +70°C)
28-Pin QFN (derate 28.5mW/°C above T_A = +70°C) 2000mW
Operating Temperature Range .....-40°C to +85°C
Junction Temperature .....+150°C
Storage Temperature Range .....-65°C to +150°C
Lead Temperature (soldering, 10s) ..... +300°C

Stresses beyond those listed under "Absolute Maximum Ratings" may cause permanent damage to the device. These are stress ratings only, and functional operation of the device at these or any other conditions beyond those indicated in the operational sections of the specifications is not implied. Exposure to absolute maximum rating conditions for extended periods may affect device reliability.

DC ELECTRICAL CHARACTERISTICS

(V_{CC} = +2.7V to +3.6V, R_{RBIAS} = 20kΩ, R_{RLNA} = 24kΩ, T_A = -40°C to +85°C, no RF applied. Typical values are V_{CC} = 2.75V and T_A = +25°C, unless otherwise noted.)

PARAMETER	CONDITIONS	MIN	TYP	MAX	UNITS
PCS CDMA MODE (MAX2323)					
Operating Supply Current	Midgain mode		20.5	24	mA
	High-gain, low-linearity idle mode		22	25.5	
	High-gain, high-linearity mode		25.5	30	
CELLULAR CDMA MODE (MAX2323/MAX2325)					
Operating Supply Current	Low-gain mode		18.0	21.5	mA
	Midgain mode		19.5	23.5	
	High-gain, low-linearity idle mode		19.5	23.5	
	High-gain, high-linearity mode		26.5	31.5	
FM MODE (MAX2323/MAX2325)					
Operating Supply Current	Low-gain mode		15	18	mA
	Midgain mode		16.5	20	
	High-gain, low-linearity mode		16.5	20	
	High-gain, high-linearity mode		23.5	28	
SHUTDOWN MODE					
Shutdown Supply Current	SLEEP = high		1	25	µA
ALL MODES					
Digital Input Logic High	Except SLEEP input	2.0			V
SLEEP Input Logic High		V_{CC} - 0.6			V
Digital Input Logic Low				0.6	V
Digital Input Current High				5	µA
Digital Input Current Low		-25			µA

AC ELECTRICAL CHARACTERISTICS

(MAX2323 EV kit, F_{PLNAIN} = 1960MHz, F_{CLNAIN} = 881MHz, F_{IF} = 110MHz, high-side LO, 50Ω system, R_{RBIAS} = 20kΩ, R_{RLNA} = 24kΩ. Typical values are V_{CC} = 2.75V, T_A = +25°C. LO input power = -7dBm, LOW = 0V, HIGH = V_{CC}, unless otherwise noted.) (Note 1)

PARAMETER	CONDITIONS		MIN	TYP	MAX	UNITS
OVERALL PERFORMANCE						
Low-Band RF Frequency Range	(Note 2)		850		950	MHz
High-Band RF Frequency Range	MAX2323 (Note 2)		1800		2200	MHz
Low-Band LO Frequency Range	(Note 2)		800		1150	MHz
High-Band LO Frequency Range	MAX2323 (Note 2)		1600		2300	MHz
IF Frequency Range	(Note 2)		40		400	MHz
LO Input Level	100Ω input impedance		-7	-5	0	dBm
CELLULAR LNA PERFORMANCE (MAX2323/MAX2325)						
CDMA AND FM HIGH-GAIN, HIGH-LINEARITY MODES						
Gain	$T_A = T_{MIN}$ to T_{MAX}		14.5	15.5	17	dB
Noise Figure				1.7	1.9	dB
IIP3		T_A = +25°C	9	10.5		dBm
		$T_A = T_{MIN}$ to T_{MAX}	7.5			
CDMA HIGH-GAIN, LOW-LINEARITY PAGING MODE, AND FM HIGH-GAIN MODE						
Gain	$T_A = T_{MIN}$ to T_{MAX}		13	14.5	16	dB
LNA Noise Figure				1.7	1.9	dB
LNA IIP3	(Note 3)	T_A = +25°C	2.5	5		dBm
		$T_A = T_{MIN}$ to T_{MAX}	2.7			
CDMA AND FM MIDGAIN MODES						
Gain	$T_A = T_{MIN}$ to T_{MAX}		4.5	6	8	dB
Noise Figure				3.3	3.5	dB
IIP3	(Note 3)	T_A = +25°C	8.5	10		dBm
		$T_A = T_{MIN}$ to T_{MAX}	5			
CDMA AND FM LOW-GAIN MODES						
Gain	$T_A = T_{MIN}$ to T_{MAX}		-4.5	-3.5	-1.5	dB
Noise Figure				7.5	8.5	dB
IIP3	(Note 3)		13	17.5		dBm
PCS LNA PERFORMANCE (MAX2323)						
CDMA HIGH-GAIN, HIGH-LINEARITY MODE						
Gain	$T_A = T_{MIN}$ to T_{MAX}		13.5	14.5	15.5	dB
Noise Figure				1.9	2.1	dB
IIP3	(Note 3)	T_A = +25°C	7	8		dBm
		$T_A = T_{MIN}$ to T_{MAX}	5.5			

AC ELECTRICAL CHARACTERISTICS (continued)

(MAX2323 EV kit, F_{PLNAIN} = 1960MHz, F_{CLNAIN} = 881MHz, F_{IF} = 110MHz, high-side LO, 50Ω system, R_{RBIAS} = 20kΩ, R_{RLNA} = 24kΩ. Typical values are V_{CC} = 2.75V, T_A = +25°C. LO input power = -7dBm, LOW = 0V, HIGH = V_{CC}, unless otherwise noted.) (Note 1)

PARAMETER	CONDITIONS		MIN	TYP	MAX	UNITS
CDMA HIGH-GAIN, LOW-LINEARITY PAGING MODE						
Gain	$T_A = T_{MIN}$ to T_{MAX}		12.5	14	14.5	dB
LNA Noise Figure				1.9	2.1	dB
LNA IIP3	(Note 3)	T_A = +25°C	4.5	5.5		dBm
		$T_A = T_{MIN}$ to T_{MAX}	3.0			
CDMA MIDGAIN MODE						
Gain	$T_A = T_{MIN}$ to T_{MAX}		-2.0	-1.0	-0.5	dB
Noise Figure				5.6	6.0	dB
IIP3	(Note 3)		12	13.5		dBm
CELLULAR MIXER PERFORMANCE (MAX2323/MAX2325)						
CDMA, ALL MODES						
Gain	$T_A = T_{MIN}$ to T_{MAX}		11.5	13	14.5	dB
Noise Figure				7.5	8.5	dB
IIP3	$T_A = T_{MIN}$ to T_{MAX} (Note 3)		3.5	4.8		dBm
FM MODE						
Gain	$T_A = T_{MIN}$ to T_{MAX}		8.5	10	11.5	dB
Noise Figure				10.5	11.5	dB
IIP3	$T_A = T_{MIN}$ to T_{MAX} (Note 3)		1.5	5		dBm
PCS MIXER PERFORMANCE (MAX2323)						
CDMA HIGH-GAIN, HIGH-LINEARITY MODE						
Gain	$T_A = T_{MIN}$ to T_{MAX}		12	13.5	15.5	dB
Noise Figure				7.9	8.5	dB
IIP3	$T_A = T_{MIN}$ to T_{MAX} (Note 3)		1.5	4		dBm

Note 1: Devices are production tested for functionality at frequencies stated; 30 units from 3 independent wafer lots, when one lot was at the upper process extreme, one lot was nominal, and one lot was at the lower process extreme, were characterized. The resulting standard deviation therefore includes process variations. Data sheet limits are ±3σ from the mean.

Note 2: Operation over this frequency range requires the ports to be rematched for the desired operating range. Performance at various frequencies is indicated by the S-parameter data in Tables 3–7.

Note 3: Specifications are based on R_{BIAS} = 20kΩ. I_{CC} for all LNAs (except HGHL) and mixers are inversely proportional to R_{RBIAS}. IIP3 can be traded for I_{CC} by selecting other values of R_{RBIAS}.

Pin Description

PIN		NAME	FUNCTION
MAX2323	MAX2325		
1	1	RLNA	LNA Bias-Setting Pin. For nominal bias, connect a 24kΩ resistor to ground. This resistor value can be adjusted to alter the linearity of the input LNA in high-gain, high-linearity CDMA modes.
—	2, 10, 23	N.C.	No Connection. Leave this pin floating.
2	—	PLNAIN	High-Band RF Input Port. Blocking capacitor is required, which may be used as part of the matching network.
3, 8, 11, 12, 13, 18, 24, 25, 27	3, 8, 11, 12, 13, 17, 18, 24, 25, 27	GND	Ground
4	4	CLNAIN	Low-Band RF Input Port. Blocking capacitor is required, which may be used as part of the matching network.
5	5	SLEEP	Logic Input. High shuts off entire device.
6	6	G2	Logic Input. See Tables 1 and 2 for details.
7	7	G1	Logic Input. See Tables 1 and 2 for details.
9	9	LOLIN	Low-Frequency LO Input Port. Requires blocking capacitor, which may be used as part of an optional matching network.
10	—	LOHIN	High-Frequency LO Input Port. Requires blocking capacitor, which may be used as part of an optional matching network.
14	14	MODE	Logic Input. See Tables 1 and 2 for details.
15	15	FMOUT	FM IF Output Port. Requires a pull-up inductor and a DC blocking capacitor, which may be used as part of the matching network.
16	16	V_{CC}	2.7V to 3.6V Supply Pin. Must be capacitively bypassed near the pin.
17	—	BAND	Logic Input. High selects high band (PCS). Low selects low band (cellular).
19, 20	19, 20	CDMA-, CDMA+	Differential Output Port for CDMA Mode. Requires pull-up inductors and blocking capacitors, which may be used as part of the matching network.
21	21	RBIAS	Bias Setting Pin. For nominal bias, connect a 20kΩ resistor to ground. This resistor value can be adjusted to alter the linearity of the mixers in all modes and the LNA in all modes except high gain and high linearity.
22	22	CMIXIN	Low-Band Mixer Input Port. Requires blocking capacitor, which may be used as part of the matching network.
23	—	PMIXIN	High-Band Mixer Input Port. Requires blocking capacitor, which may be used as part of the matching network.
26	—	PLNAOUT	High-Band LNA Output Port. This port requires an external pull-up inductor and series capacitor as part of the matching network.
—	26	V_{CC}	2.7 to 3.6V Supply Pin. Bypassing is not necessary at this pin.

Pin Description (continued)

MAX2323	MAX2325	NAME	FUNCTION
28	28	CLNAOUT	Low-Band LNA Output Port. This port requires an external pull-up inductor and series capacitor as part of the matching network.
Slug	Slug	GND	Ground

Table 1. MAX2323 Operational Modes

MODES	FUNCTION							CTRL PIN				
	BAND	HGHL AMP	HGLL AMP	MGHL AMP	LGHL AMP	CDMA MIXER	FM MIXER	BAND	MODE	G1	G2	SLEEP
PCS Band, High Gain, High Linearity (HGHL)	P	√				√		1	X	0	0	0
PCS Band, High Gain, Low Linearity (Paging Mode) (HGLL)	P		√			√		1	X	0	1	0
PCS Band, Midgain (MGHL)	P			√		√		1	X	1	0	0
Cellular Band CDMA Mode, High Gain, High Linearity (HGHL)	C	√				√		0	1	0	0	0
Cellular Band CDMA, High Gain, Low Linearity (Paging Mode) (HGLL)	C		√			√		0	1	0	1	0
Cellular Band, CDMA Mode, Midgain (MGHL)	C			√		√		0	1	1	0	0
Cellular Band, CDMA Mode, Low Gain (LGHL)	C				√	√		0	1	1	1	0
Cellular Band, FM Mode, High Gain, Low Linearity (HGLL)	C		√				√	0	0	0	1	0
Cellular Band, FM Mode, Midgain	C			√			√	0	0	1	0	0
Cellular Band, FM Mode, Low Gain	C				√		√	0	0	1	1	0
Shutdown	—	—	—	—	—	—	—	X	X	X	X	1
Undefined	—	—	—	—	—	—	—	1	X	1	1	0
Cellular Band, FM Mode, High Gain, High Linearity (HGHL)	C	√	—	—	—	—	√	0	0	0	0	0

X: Don't care

Table 2. MAX2325 Operational Modes

MODES	FUNCTION							CTRL PIN			
	BAND	HGHL AMP	HGLL AMP	MGHL AMP	LGHL AMP	CDMA MIXER	FM MIXER	MODE	G1	G2	SLEEP
Cellular Band CDMA Mode, High Gain, High Linearity (HGHL)	C	√				√		1	0	0	0
Cellular Band CDMA, High Gain, Low Linearity (Paging Mode) (HGLL)	C		√			√		1	0	1	0
Cellular Band, CDMA Mode, Midgain (MGHL)	C			√		√		1	1	0	0
Cellular Band, CDMA Mode, Low Gain (LGHL)	C				√	√		1	1	1	0
Cellular Band, FM Mode, High Gain, Low Linearity (HGLL)	C		√				√	0	0	1	0
Cellular Band, FM Mode, Midgain	C			√			√	0	1	0	0
Cellular Band, FM Mode, Low Gain	C				√		√	0	1	1	0
Shutdown	—	—	—	—	—	—	—	X	X	X	1
Cellular Band, FM Mode, High Gain, High Linearity (HGHL)		√					√	0	0	0	0

X: Don't care

Table 3. Cellular LNA S Parameters in High-Gain High-Linearity Mode

FREQUENCY (MHz)	S11 (MAG)	S11 (PHASE)	S21 (MAG)	S21 (PHASE)	S12 (MAG)	S12 (PHASE)	S22 (MAG)	S22 (PHASE)
700	0.623	-81.9	4.58	79.8	0.046	59.5	0.746	-29.5
750	0.627	-84.3	4.30	78.0	0.048	60.6	0.748	-30.2
800	0.629	-86.6	4.06	74.8	0.049	60.9	0.750	-30.9
850	0.631	-89.0	3.70	72.3	0.051	61.4	0.749	-31.1
900	0.632	-91.4	3.50	72.2	0.052	62.1	0.751	-32.3
950	0.635	-93.7	3.39	68.7	0.053	61.3	0.753	-33.0
1000	0.635	-96.0	3.08	66.3	0.053	62.7	0.753	-33.5

Table 4. PCS LNA S Parameters in High-Gain High-Linearity Mode

FREQUENCY (MHz)	S11 (MAG)	S11 (PHASE)	S21 (MAG)	S21 (PHASE)	S12 (MAG)	S12 (PHASE)	S22 (MAG)	S22 (PHASE)
1700	0.671	-125.8	5.77	109.2	0.062	90.4	0.796	-50.3
1750	0.675	-126.9	5.66	109.3	0.064	89.9	0.800	-50.7
1800	0.685	-128.9	5.66	107.2	0.065	89.1	0.808	-51.7
1850	0.689	-130.8	5.56	106.3	0.066	88.7	0.812	-52.6
1900	0.694	-132.7	5.63	104.7	0.066	89.3	0.817	-53.6
1950	0.696	-134.3	5.54	102.7	0.066	90.6	0.820	-54.4
2000	0.700	-135.8	5.50	101.2	0.068	91.9	0.826	-55.3
2050	0.706	-137.3	5.41	99.0	0.070	92.6	0.832	-56.3
2100	0.712	-138.9	5.33	97.4	0.072	92.7	0.839	-57.4
2150	0.717	-140.4	5.24	95.0	0.073	93.0	0.844	-58.8
2200	0.718	-141.9	5.08	93.3	0.073	94.2	0.845	-60.1
2250	0.721	-143.2	4.99	91.2	0.074	96.2	0.849	-61.4
2300	0.724	-144.5	4.78	89.0	0.077	98.3	0.852	-62.9
2350	0.730	-145.6	4.64	87.7	0.081	99.2	0.858	-64.5
2400	0.735	-146.9	4.45	85.7	0.085	99.4	0.862	-66.5
2450	0.740	-147.9	4.33	85.4	0.087	99.3	0.867	-68.0
2500	0.746	-148.4	4.39	85.5	0.089	99.5	0.875	-69.1

Table 5. Cellular Mixer S11 in High-Gain High-Linearity Mode

FREQUENCY (MHz)	S11 (MAG)	S11 (PHASE)
700	0.803	-17.5
750	0.792	-18.1
800	0.799	-18.8
850	0.769	-20.2
900	0.761	-21.9
950	0.751	-23.9
1000	0.738	-26.7

Table 6. PCS Mixer S11 in High-Gain High-Linearity Mode

FREQUENCY (MHz)	S11 (MAG)	S11 (PHASE)
1700	0.764	-42.6
1750	0.763	-44.1
1800	0.764	-45.8
1850	0.763	-47.3
1900	0.765	-48.5
1950	0.762	-50.0
2000	0.762	-50.1
2050	0.762	-50.0
2100	0.762	-49.9
2150	0.762	-49.9
2200	0.762	-50.0
2250	0.762	-50.0
2300	0.762	-49.9
2350	0.762	-50.1
2400	0.751	-64.4
2450	0.750	-64.3
2500	0.750	-64.2

Table 7. Mixer IF Port S22

FREQUENCY (MHz)	DIGITAL MIXER (SINGLE-ENDED)		FREQUENCY (MHz)	FM MIXER	
	S22 (MAG)	S22 (PHASE)		S22 (MAG)	S22 (PHASE)
50	0.999	-2.1	50	0.998	-1.7
100	0.997	-4.1	70	0.998	-2.5
110	0.996	-4.5	85	0.998	-2.8
130	0.995	-5.5	100	0.998	-3.6
150	0.994	-6.2	110	0.998	-4.0
200	0.993	-8.2	150	0.998	-5.4
210	0.992	-8.6	200	0.998	-7.2
250	0.986	-10.0	250	0.997	-8.9
300	0.983	-12.0	300	0.997	-10.6
350	0.982	-13.9	350	0.997	-12.1
400	0.977	-15.8	400	0.997	-13.8

Typical Application Circuits

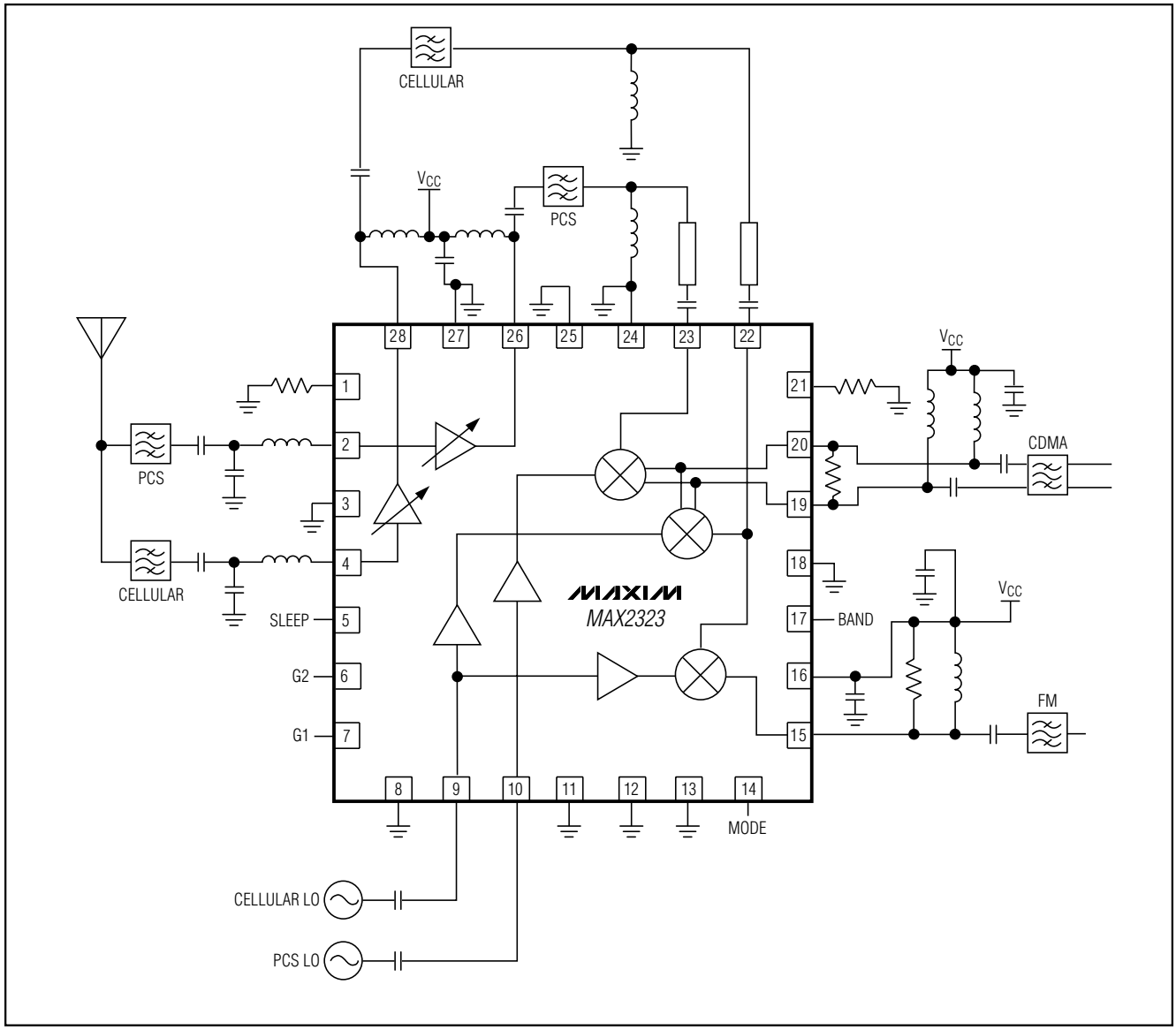

Triple/Dual-Mode CDMA LNA/Mixers

Typical Application Circuits (continued)

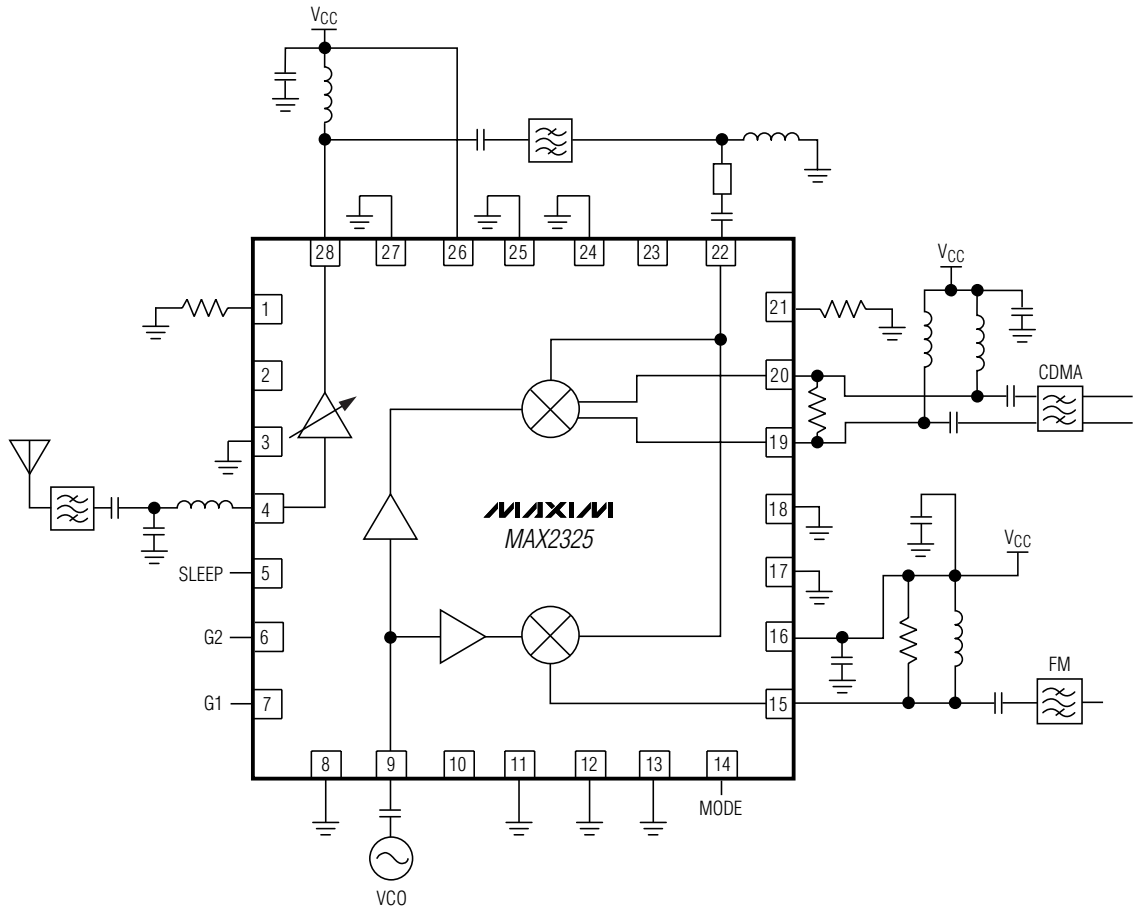

EV Kit Information

Component List

DESIGNATION	QTY	DESCRIPTION
C1, C4, C9, C24, C29	5	0.01µF ±10% ceramic caps (0402) Murata GRM36X7R103K016 or Taiyo Yuden EMK105B103KW
C2, C3, C21, C22, C27	5	100pF ±5% ceramic caps (0402) Murata GRM36COG101J050 or Taiyo Yuden UMK105CH101JW
C17	1	2.7pF ±0.1pF ceramic cap (0402) Murata GRM36COG2R7B050 or Taiyo Yuden EVK105CH2R7JW
C7	1	3.0pF ±0.1pF ceramic cap (0402) Murata GRM36COG3R0B050 or Taiyo Yuden EVK105CH3R0JW
C8	1	1.5pF ±0.1pF ceramic cap (0402) Murata GRM36COG1R5B050 or Taiyo Yuden EVK105CH1R5BW
C12	1	0Ω resistor (0402)
C6, C10	—	Not installed
C11, C18, C19, C26, C28, C32, C33	7	1000pF ±10% ceramic caps (0402) Murata GRM36X7R102K050 or Taiyo Yuden UMK105B102KW
C5, C14, C16	3	6800pF ±10% capacitors (0402) Murata GRM36X7R682K025 or Taiyo Yuden TMK105B682KW
C15	1	1.0pF ±0.1pF ceramic cap (0402) Murata GRM36COG010B050 or Taiyo Yuden EVK105CH010BW
C23, C25	2	5.6pF ±0.25pF ceramic caps (0402) Murata GRM36COG5R6C050
C31	1	4.3pF ±0.1pF ceramic cap (0402) Murata GRM36COG4R3B050 or Taiyo Yuden EVK105CH4R3JW
L1	1	8.2nH ±5% inductor (0603) Murata LQG11A8N2J00
L2, L4	2	1.8nH ±10% inductors (0603) Coilcraft 0603CS-1N8XKBC
L3, L6	2	0Ω resistors (0603)
L5	1	6.8nH ±5% inductor (0603) Murata LQG11A6N8J00

DESIGNATION	QTY	DESCRIPTION
L7, L8	2	270nH ±2% inductors (0805) Coilcraft 0805CS-271XGBC
L10	1	3.9nH ±0.3nH inductor (0603) Murata LQG11A3N9S00
L11	1	330nH ±2% inductor (0805) Coilcraft 0805CS-331XGBC
L12	1	2.7nH ±0.3nH inductor (0603) Murata LQG11A2N7S00
R1, R4, R5, R8, R10	5	1kΩ ±5% resistors (0402)
R2	1	24.3kΩ ±1% resistor (0402)
R3	1	20.0kΩ ±1% resistor (0402)
R7	1	2.7kΩ ±5% resistor (0402)
R11	1	8.2kΩ ±5% resistor (0402)
T1	1	Balun transformer (B5F type) Toko 458DB-1011
PLNAIN, CLNAIN, LOLIN, LOHIN, CLNAOUT, PLNAOUT, CDMAOUT, FMOUT	8	SMA connectors (PC edge mount) EFJohnson 142-0701-801 or Digi-Key J502-ND
PMIXIN, CMIXIN	2	SMA connectors (vertical mount) Digi-Key J500-ND
GND, VCC	2	Test points Mouser 151-203
JU1, JU3, JU4, JU7, JU9	5	3-pin headers
JU2, JU6, JU8, JU10	4	2-pin headers
None	10	Shunts (JU1–JU4, JU6–JU10)
U1	1	MAX2323EGI (QFN-28)
None	1	MAX2323/MAX2325 data sheet
None	1	MAX2323 PC board

Triple/Dual-Mode CDMA LNA/Mixers

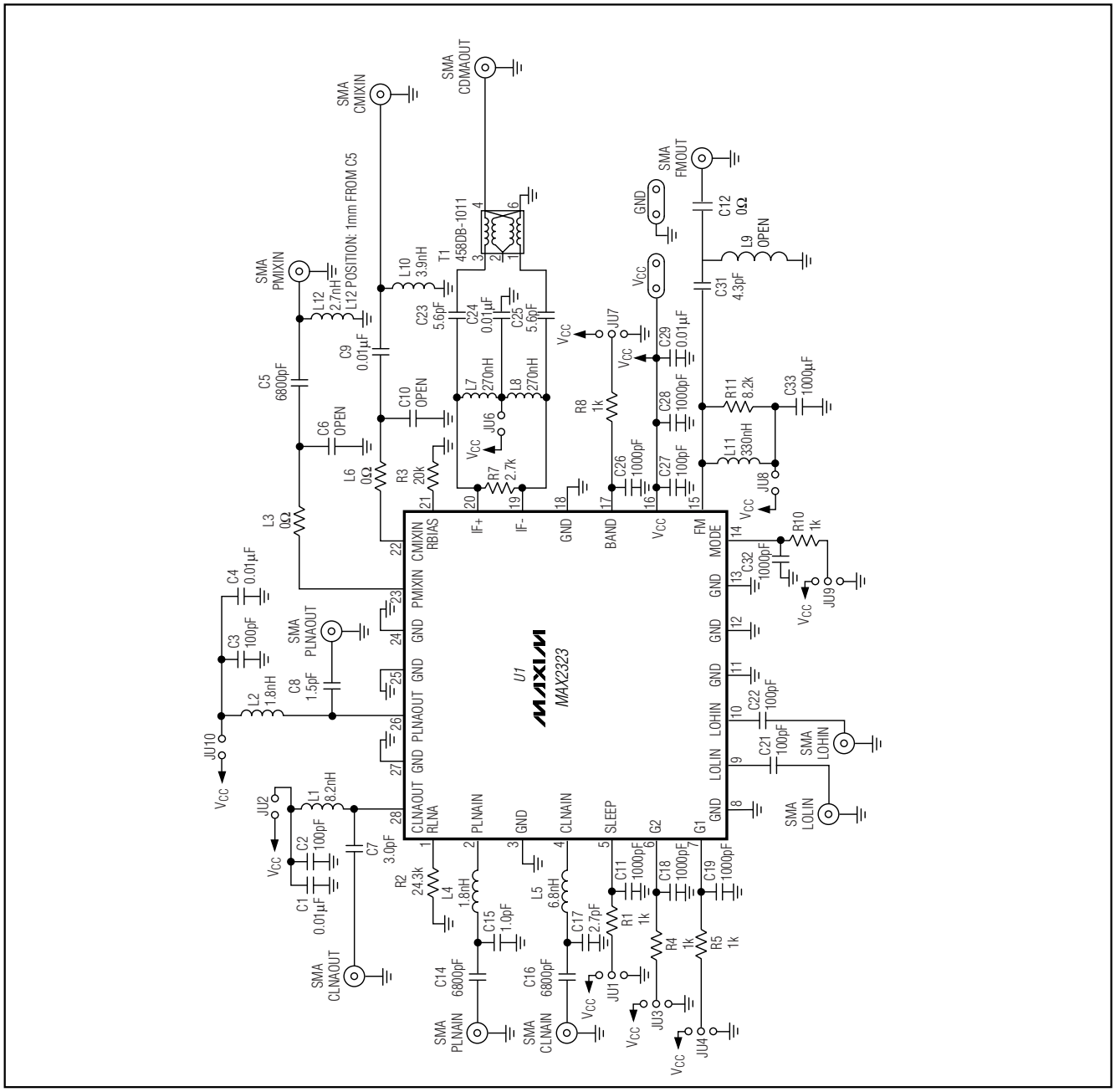

Figure 1. MAX2323 Evaluation Kit

Package Information

For the latest package outline information, go to **www.maxim-ic.com/packages**.

Maxim cannot assume responsibility for use of any circuitry other than circuitry entirely embodied in a Maxim product. No circuit patent licenses are implied. Maxim reserves the right to change the circuitry and specifications without notice at any time.

© 2000 Maxim Integrated Products Printed USA MAXIM is a registered trademark of Maxim Integrated Products.

НИОКР СИСТЕМС

ООО «НИОКРсистемс» - это оперативные поставки широкого спектра электронных компонентов отечественного и импортного производства напрямую от производителей и с крупнейших мировых складов. Реализуемая нашей компанией продукция насчитывает более полумиллиона наименований.

Благодаря этому наша компания предлагает к поставке практически не ограниченный ассортимент компонентов как оптовыми, мелкооптовыми партиями, так и в розницу.

Благодаря развитой сети поставщиков, помогаем в поиске и приобретении экзотичных или снятых с производства компонентов.

Наша компания это:

- Гарантия качества поставляемой продукции
- Широкий ассортимент
- Минимальные сроки поставок
- Техническая поддержка
- Подбор комплектации
- Индивидуальный подход
- Гибкое ценообразование
- Работаем по 275 ФЗ

ООО «НИОКР СИТЕМС»
Москва, 125362, Россия, ул. Вишневая, д. 9, к. 1, Блок 104 а и 104 в

Телефон: 8 (495) 268-14-82
Email: n@nsistems.ru

ИНН: 7735154786
ОГРН: 1167746717709