19-1736; Rev 0; 7/00

# Triple/Dual-Mode CDMA LNA/Mixers



## General Description

The MAX2323/MAX2325 are low-noise amplifier (LNA) plus mixer ICs optimized for code-division multiple-access (CDMA) applications in both cellular and PCS bands. The MAX2323 addresses dual-band, triple-mode CDMA applications by providing switched signal paths for cellular FM, cellular CDMA, and PCS CDMA. The MAX2325 is a cellular-band dual-mode version.

To optimize cellular-band dynamic range at minimum current, the MAX2323/MAX2325 implement four LNA states: high gain/high linearity, high gain/low linearity, midgain, and low gain. In high-gain/high-linearity mode, the adjustable high-intercept LNA minimizes desensitization in the presence of a large interfering signal. For the other gain states, the LNA current is reduced to improve standby time.

The CDMA mixers are designed for high linearity, low noise, and differential IF outputs, while the FM mixer is designed for lower current and single-ended output. Each band is implemented with a separate mixer to optimize performance for the specific band.

The MAX2323/MAX2325 can also be used in TDMA, EDGE, and W-CDMA phones.

## Applications

Dual-Band, Triple-Mode PCS/Cellular Phones

Dual-Mode Cellular Phones

***Typical Application Circuits appear at end of data sheet.***

## Features

- **2.7V Operation**
- **Dual Band, Triple Mode**
- **Three LNA Gain Settings (Cellular)**
- **Two LNA Gain Settings (PCS)**
- **18mA in Low-Gain Mode**
  **19.5mA in Paging and Midgain Mode**
  **26.5mA in High-Gain, High-Linearity Mode**
  **16.5mA in FM Mode, High-Gain, Low-Linearity Mode**
- **2.5dB (typ) Cascade Noise Figure**
- **Adjustable LNA IIP3, +5dBm to +13dBm**
- **Ultra-Small 28-Pin Package (5mm x 5mm)**

## Ordering Information

| PART | TEMP. RANGE | PIN- PACKAGE |
|---|---|---|
| **MAX2323**EGI | -40°C to +85°C | 28 QFN |
| **MAX2325**EGI | -40°C to +85°C | 28 QFN |
| **MAX2323**EVKIT | -40°C to +85°C | 28 QFN |

## Pin Configuration/ Functional Diagram

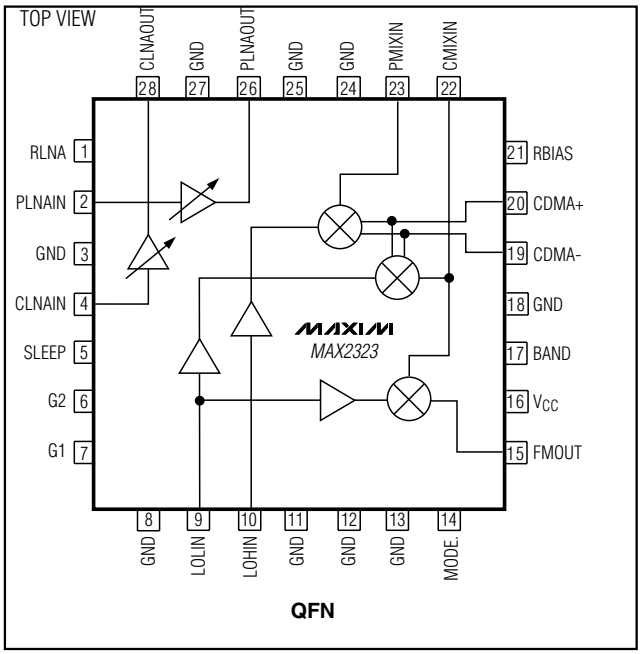




***For free samples and the latest literature, visit www.maxim-ic.com or phone 1-800-998-8800. For small orders, phone 1-800-835-8769.***

# Triple/Dual-Mode CDMA LNA/Mixers

## ABSOLUTE MAXIMUM RATINGS

$V_{CC}$ to GND .....0.3V, +4.3V
Digital Input Voltage to GND .....-0.3V to ($V_{CC}$ + 0.3V)
LNA Input Level .....1Vp
LO, Mixer Input Levels .....+5dBm
Digital Input Current .....±10mA
Continuous Power Dissipation ($T_A$ = +70°C)
28-Pin QFN (derate 28.5mW/°C above $T_A$ = +70°C) .....2000mW
Operating Temperature Range .....-40°C to +85°C
Junction Temperature .....+150°C
Storage Temperature Range .....-65°C to +150°C
Lead Temperature (soldering, 10s) ..... +300°C

*Stresses beyond those listed under "Absolute Maximum Ratings" may cause permanent damage to the device. These are stress ratings only, and functional operation of the device at these or any other conditions beyond those indicated in the operational sections of the specifications is not implied. Exposure to absolute maximum rating conditions for extended periods may affect device reliability.*

## DC ELECTRICAL CHARACTERISTICS

($V_{CC}$ = +2.7V to +3.6V, $R_{RBIAS}$ = 20kΩ, $R_{RLNA}$ = 24kΩ, $T_A$ = -40°C to +85°C, no RF applied. Typical values are $V_{CC}$ = 2.75V and $T_A$ = +25°C, unless otherwise noted.)

| PARAMETER | CONDITIONS | MIN | TYP | MAX | UNITS |
|---|---|---|---|---|---|
| **PCS CDMA MODE (MAX2323)** | | | | | |
| Operating Supply Current | Midgain mode | | 20.5 | 24 | mA |
| | High-gain, low-linearity idle mode | | 22 | 25.5 | |
| | High-gain, high-linearity mode | | 25.5 | 30 | |
| **CELLULAR CDMA MODE (MAX2323/MAX2325)** | | | | | |
| Operating Supply Current | Low-gain mode | | 18.0 | 21.5 | mA |
| | Midgain mode | | 19.5 | 23.5 | |
| | High-gain, low-linearity idle mode | | 19.5 | 23.5 | |
| | High-gain, high-linearity mode | | 26.5 | 31.5 | |
| **FM MODE (MAX2323/MAX2325)** | | | | | |
| Operating Supply Current | Low-gain mode | | 15 | 18 | mA |
| | Midgain mode | | 16.5 | 20 | |
| | High-gain, low-linearity mode | | 16.5 | 20 | |
| | High-gain, high-linearity mode | | 23.5 | 28 | |
| **SHUTDOWN MODE** | | | | | |
| Shutdown Supply Current | SLEEP = high | | 1 | 25 | µA |
| **ALL MODES** | | | | | |
| Digital Input Logic High | Except SLEEP input | 2.0 | | | V |
| SLEEP Input Logic High | | $V_{CC}$ - 0.6 | | | V |
| Digital Input Logic Low | | | | 0.6 | V |
| Digital Input Current High | | | | 5 | µA |
| Digital Input Current Low | | -25 | | | µA |

## AC ELECTRICAL CHARACTERISTICS

(MAX2323 EV kit, $F_{PLNAIN}$ = 1960MHz, $F_{CLNAIN}$ = 881MHz, $F_{IF}$ = 110MHz, high-side LO, 50Ω system, $R_{RBIAS}$ = 20kΩ, $R_{RLNA}$ = 24kΩ. Typical values are $V_{CC}$ = 2.75V, $T_A$ = +25°C. LO input power = -7dBm, LOW = 0V, HIGH = $V_{CC}$, unless otherwise noted.) (Note 1)

| PARAMETER | CONDITIONS | | MIN | TYP | MAX | UNITS |
|---|---|---|---|---|---|---|
| **OVERALL PERFORMANCE** | | | | | | |
| Low-Band RF Frequency Range | (Note 2) | | 850 | | 950 | MHz |
| High-Band RF Frequency Range | MAX2323 (Note 2) | | 1800 | | 2200 | MHz |
| Low-Band LO Frequency Range | (Note 2) | | 800 | | 1150 | MHz |
| High-Band LO Frequency Range | MAX2323 (Note 2) | | 1600 | | 2300 | MHz |
| IF Frequency Range | (Note 2) | | 40 | | 400 | MHz |
| LO Input Level | 100Ω input impedance | | -7 | -5 | 0 | dBm |
| **CELLULAR LNA PERFORMANCE (MAX2323/MAX2325)** | | | | | | |
| **CDMA AND FM HIGH-GAIN, HIGH-LINEARITY MODES** | | | | | | |
| Gain | $T_A = T_{MIN}$ to $T_{MAX}$ | | 14.5 | 15.5 | 17 | dB |
| Noise Figure | | | | 1.7 | 1.9 | dB |
| IIP3 | | $T_A$ = +25°C | 9 | 10.5 | | dBm |
| | | $T_A = T_{MIN}$ to $T_{MAX}$ | 7.5 | | | |
| **CDMA HIGH-GAIN, LOW-LINEARITY PAGING MODE, AND FM HIGH-GAIN MODE** | | | | | | |
| Gain | $T_A = T_{MIN}$ to $T_{MAX}$ | | 13 | 14.5 | 16 | dB |
| LNA Noise Figure | | | | 1.7 | 1.9 | dB |
| LNA IIP3 | (Note 3) | $T_A$ = +25°C | 2.5 | 5 | | dBm |
| | | $T_A = T_{MIN}$ to $T_{MAX}$ | 2.7 | | | |
| **CDMA AND FM MIDGAIN MODES** | | | | | | |
| Gain | $T_A = T_{MIN}$ to $T_{MAX}$ | | 4.5 | 6 | 8 | dB |
| Noise Figure | | | | 3.3 | 3.5 | dB |
| IIP3 | (Note 3) | $T_A$ = +25°C | 8.5 | 10 | | dBm |
| | | $T_A = T_{MIN}$ to $T_{MAX}$ | 5 | | | |
| **CDMA AND FM LOW-GAIN MODES** | | | | | | |
| Gain | $T_A = T_{MIN}$ to $T_{MAX}$ | | -4.5 | -3.5 | -1.5 | dB |
| Noise Figure | | | | 7.5 | 8.5 | dB |
| IIP3 | (Note 3) | | 13 | 17.5 | | dBm |
| **PCS LNA PERFORMANCE (MAX2323)** | | | | | | |
| **CDMA HIGH-GAIN, HIGH-LINEARITY MODE** | | | | | | |
| Gain | $T_A = T_{MIN}$ to $T_{MAX}$ | | 13.5 | 14.5 | 15.5 | dB |
| Noise Figure | | | | 1.9 | 2.1 | dB |
| IIP3 | (Note 3) | $T_A$ = +25°C | 7 | 8 | | dBm |
| | | $T_A = T_{MIN}$ to $T_{MAX}$ | 5.5 | | | |

## AC ELECTRICAL CHARACTERISTICS (continued)

(MAX2323 EV kit, $F_{PLNAIN}$ = 1960MHz, $F_{CLNAIN}$ = 881MHz, $F_{IF}$ = 110MHz, high-side LO, 50Ω system, $R_{RBIAS}$ = 20kΩ, $R_{RLNA}$ = 24kΩ. Typical values are $V_{CC}$ = 2.75V, $T_A$ = +25°C. LO input power = -7dBm, LOW = 0V, HIGH = $V_{CC}$, unless otherwise noted.) (Note 1)

| PARAMETER | CONDITIONS | | MIN | TYP | MAX | UNITS |
|---|---|---|---|---|---|---|
| **CDMA HIGH-GAIN, LOW-LINEARITY PAGING MODE** | | | | | | |
| Gain | $T_A = T_{MIN}$ to $T_{MAX}$ | | 12.5 | 14 | 14.5 | dB |
| LNA Noise Figure | | | | 1.9 | 2.1 | dB |
| LNA IIP3 | (Note 3) | $T_A$ = +25°C | 4.5 | 5.5 | | dBm |
| | | $T_A = T_{MIN}$ to $T_{MAX}$ | 3.0 | | | |
| **CDMA MIDGAIN MODE** | | | | | | |
| Gain | $T_A = T_{MIN}$ to $T_{MAX}$ | | -2.0 | -1.0 | -0.5 | dB |
| Noise Figure | | | | 5.6 | 6.0 | dB |
| IIP3 | (Note 3) | | 12 | 13.5 | | dBm |
| **CELLULAR MIXER PERFORMANCE (MAX2323/MAX2325)** | | | | | | |
| **CDMA, ALL MODES** | | | | | | |
| Gain | $T_A = T_{MIN}$ to $T_{MAX}$ | | 11.5 | 13 | 14.5 | dB |
| Noise Figure | | | | 7.5 | 8.5 | dB |
| IIP3 | $T_A = T_{MIN}$ to $T_{MAX}$ (Note 3) | | 3.5 | 4.8 | | dBm |
| **FM MODE** | | | | | | |
| Gain | $T_A = T_{MIN}$ to $T_{MAX}$ | | 8.5 | 10 | 11.5 | dB |
| Noise Figure | | | | 10.5 | 11.5 | dB |
| IIP3 | $T_A = T_{MIN}$ to $T_{MAX}$ (Note 3) | | 1.5 | 5 | | dBm |
| **PCS MIXER PERFORMANCE (MAX2323)** | | | | | | |
| **CDMA HIGH-GAIN, HIGH-LINEARITY MODE** | | | | | | |
| Gain | $T_A = T_{MIN}$ to $T_{MAX}$ | | 12 | 13.5 | 15.5 | dB |
| Noise Figure | | | | 7.9 | 8.5 | dB |
| IIP3 | $T_A = T_{MIN}$ to $T_{MAX}$ (Note 3) | | 1.5 | 4 | | dBm |

**Note 1:** Devices are production tested for functionality at frequencies stated; 30 units from 3 independent wafer lots, when one lot was at the upper process extreme, one lot was nominal, and one lot was at the lower process extreme, were characterized. The resulting standard deviation therefore includes process variations. Data sheet limits are ±3σ from the mean.

**Note 2:** Operation over this frequency range requires the ports to be rematched for the desired operating range. Performance at various frequencies is indicated by the S-parameter data in Tables 3–7.

**Note 3:** Specifications are based on $R_{BIAS}$ = 20kΩ. $I_{CC}$ for all LNAs (except HGHL) and mixers are inversely proportional to $R_{RBIAS}$. IIP3 can be traded for $I_{CC}$ by selecting other values of $R_{RBIAS}$.

## Pin Description

| PIN | | NAME | FUNCTION |
|---|---|---|---|
| MAX2323 | MAX2325 | | |
| 1 | 1 | RLNA | LNA Bias-Setting Pin. For nominal bias, connect a 24kΩ resistor to ground. This resistor value can be adjusted to alter the linearity of the input LNA in high-gain, high-linearity CDMA modes. |
| — | 2, 10, 23 | N.C. | No Connection. Leave this pin floating. |
| 2 | — | PLNAIN | High-Band RF Input Port. Blocking capacitor is required, which may be used as part of the matching network. |
| 3, 8, 11, 12, 13, 18, 24, 25, 27 | 3, 8, 11, 12, 13, 17, 18, 24, 25, 27 | GND | Ground |
| 4 | 4 | CLNAIN | Low-Band RF Input Port. Blocking capacitor is required, which may be used as part of the matching network. |
| 5 | 5 | SLEEP | Logic Input. High shuts off entire device. |
| 6 | 6 | G2 | Logic Input. See Tables 1 and 2 for details. |
| 7 | 7 | G1 | Logic Input. See Tables 1 and 2 for details. |
| 9 | 9 | LOLIN | Low-Frequency LO Input Port. Requires blocking capacitor, which may be used as part of an optional matching network. |
| 10 | — | LOHIN | High-Frequency LO Input Port. Requires blocking capacitor, which may be used as part of an optional matching network. |
| 14 | 14 | MODE | Logic Input. See Tables 1 and 2 for details. |
| 15 | 15 | FMOUT | FM IF Output Port. Requires a pull-up inductor and a DC blocking capacitor, which may be used as part of the matching network. |
| 16 | 16 | $V_{CC}$ | 2.7V to 3.6V Supply Pin. Must be capacitively bypassed near the pin. |
| 17 | — | BAND | Logic Input. High selects high band (PCS). Low selects low band (cellular). |
| 19, 20 | 19, 20 | CDMA-, CDMA+ | Differential Output Port for CDMA Mode. Requires pull-up inductors and blocking capacitors, which may be used as part of the matching network. |
| 21 | 21 | RBIAS | Bias Setting Pin. For nominal bias, connect a 20kΩ resistor to ground. This resistor value can be adjusted to alter the linearity of the mixers in all modes and the LNA in all modes except high gain and high linearity. |
| 22 | 22 | CMIXIN | Low-Band Mixer Input Port. Requires blocking capacitor, which may be used as part of the matching network. |
| 23 | — | PMIXIN | High-Band Mixer Input Port. Requires blocking capacitor, which may be used as part of the matching network. |
| 26 | — | PLNAOUT | High-Band LNA Output Port. This port requires an external pull-up inductor and series capacitor as part of the matching network. |
| — | 26 | $V_{CC}$ | 2.7 to 3.6V Supply Pin. Bypassing is not necessary at this pin. |

## Pin Description (continued)

| MAX2323 | MAX2325 | NAME | FUNCTION |
|---|---|---|---|
| 28 | 28 | CLNAOUT | Low-Band LNA Output Port. This port requires an external pull-up inductor and series capacitor as part of the matching network. |
| Slug | Slug | GND | Ground |

### Table 1. MAX2323 Operational Modes

| MODES | FUNCTION | | | | | | | CTRL PIN | | | | |
|---|---|---|---|---|---|---|---|---|---|---|---|---|
| | BAND | HGHL AMP | HGLL AMP | MGHL AMP | LGHL AMP | CDMA MIXER | FM MIXER | BAND | MODE | G1 | G2 | SLEEP |
| PCS Band, High Gain, High Linearity (HGHL) | P | √ | | | | √ | | 1 | X | 0 | 0 | 0 |
| PCS Band, High Gain, Low Linearity (Paging Mode) (HGLL) | P | | √ | | | √ | | 1 | X | 0 | 1 | 0 |
| PCS Band, Midgain (MGHL) | P | | | √ | | √ | | 1 | X | 1 | 0 | 0 |
| Cellular Band CDMA Mode, High Gain, High Linearity (HGHL) | C | √ | | | | √ | | 0 | 1 | 0 | 0 | 0 |
| Cellular Band CDMA, High Gain, Low Linearity (Paging Mode) (HGLL) | C | | √ | | | √ | | 0 | 1 | 0 | 1 | 0 |
| Cellular Band, CDMA Mode, Midgain (MGHL) | C | | | √ | | √ | | 0 | 1 | 1 | 0 | 0 |
| Cellular Band, CDMA Mode, Low Gain (LGHL) | C | | | | √ | √ | | 0 | 1 | 1 | 1 | 0 |
| Cellular Band, FM Mode, High Gain, Low Linearity (HGLL) | C | | √ | | | | √ | 0 | 0 | 0 | 1 | 0 |
| Cellular Band, FM Mode, Midgain | C | | | √ | | | √ | 0 | 0 | 1 | 0 | 0 |
| Cellular Band, FM Mode, Low Gain | C | | | | √ | | √ | 0 | 0 | 1 | 1 | 0 |
| Shutdown | — | — | — | — | — | — | — | X | X | X | X | 1 |
| Undefined | — | — | — | — | — | — | — | 1 | X | 1 | 1 | 0 |
| Cellular Band, FM Mode, High Gain, High Linearity (HGHL) | C | √ | — | — | — | — | √ | 0 | 0 | 0 | 0 | 0 |

*X: Don't care*

## Table 2. MAX2325 Operational Modes

| MODES | FUNCTION | | | | | | | CTRL PIN | | | |
|---|---|---|---|---|---|---|---|---|---|---|---|
| | BAND | HGHL AMP | HGLL AMP | MGHL AMP | LGHL AMP | CDMA MIXER | FM MIXER | MODE | G1 | G2 | SLEEP |
| Cellular Band CDMA Mode, High Gain, High Linearity (HGHL) | C | √ | | | | √ | | 1 | 0 | 0 | 0 |
| Cellular Band CDMA, High Gain, Low Linearity (Paging Mode) (HGLL) | C | | √ | | | √ | | 1 | 0 | 1 | 0 |
| Cellular Band, CDMA Mode, Midgain (MGHL) | C | | | √ | | √ | | 1 | 1 | 0 | 0 |
| Cellular Band, CDMA Mode, Low Gain (LGHL) | C | | | | √ | √ | | 1 | 1 | 1 | 0 |
| Cellular Band, FM Mode, High Gain, Low Linearity (HGLL) | C | | √ | | | | √ | 0 | 0 | 1 | 0 |
| Cellular Band, FM Mode, Midgain | C | | | √ | | | √ | 0 | 1 | 0 | 0 |
| Cellular Band, FM Mode, Low Gain | C | | | | √ | | √ | 0 | 1 | 1 | 0 |
| Shutdown | — | — | — | — | — | — | — | X | X | X | 1 |
| Cellular Band, FM Mode, High Gain, High Linearity (HGHL) | | √ | | | | | √ | 0 | 0 | 0 | 0 |

*X: Don't care*

## Table 3. Cellular LNA S Parameters in High-Gain High-Linearity Mode

| FREQUENCY (MHz) | S11 (MAG) | S11 (PHASE) | S21 (MAG) | S21 (PHASE) | S12 (MAG) | S12 (PHASE) | S22 (MAG) | S22 (PHASE) |
|---|---|---|---|---|---|---|---|---|
| 700 | 0.623 | -81.9 | 4.58 | 79.8 | 0.046 | 59.5 | 0.746 | -29.5 |
| 750 | 0.627 | -84.3 | 4.30 | 78.0 | 0.048 | 60.6 | 0.748 | -30.2 |
| 800 | 0.629 | -86.6 | 4.06 | 74.8 | 0.049 | 60.9 | 0.750 | -30.9 |
| 850 | 0.631 | -89.0 | 3.70 | 72.3 | 0.051 | 61.4 | 0.749 | -31.1 |
| 900 | 0.632 | -91.4 | 3.50 | 72.2 | 0.052 | 62.1 | 0.751 | -32.3 |
| 950 | 0.635 | -93.7 | 3.39 | 68.7 | 0.053 | 61.3 | 0.753 | -33.0 |
| 1000 | 0.635 | -96.0 | 3.08 | 66.3 | 0.053 | 62.7 | 0.753 | -33.5 |

## Table 4. PCS LNA S Parameters in High-Gain High-Linearity Mode

| FREQUENCY (MHz) | S11 (MAG) | S11 (PHASE) | S21 (MAG) | S21 (PHASE) | S12 (MAG) | S12 (PHASE) | S22 (MAG) | S22 (PHASE) |
|---|---|---|---|---|---|---|---|---|
| 1700 | 0.671 | -125.8 | 5.77 | 109.2 | 0.062 | 90.4 | 0.796 | -50.3 |
| 1750 | 0.675 | -126.9 | 5.66 | 109.3 | 0.064 | 89.9 | 0.800 | -50.7 |
| 1800 | 0.685 | -128.9 | 5.66 | 107.2 | 0.065 | 89.1 | 0.808 | -51.7 |
| 1850 | 0.689 | -130.8 | 5.56 | 106.3 | 0.066 | 88.7 | 0.812 | -52.6 |
| 1900 | 0.694 | -132.7 | 5.63 | 104.7 | 0.066 | 89.3 | 0.817 | -53.6 |
| 1950 | 0.696 | -134.3 | 5.54 | 102.7 | 0.066 | 90.6 | 0.820 | -54.4 |
| 2000 | 0.700 | -135.8 | 5.50 | 101.2 | 0.068 | 91.9 | 0.826 | -55.3 |
| 2050 | 0.706 | -137.3 | 5.41 | 99.0 | 0.070 | 92.6 | 0.832 | -56.3 |
| 2100 | 0.712 | -138.9 | 5.33 | 97.4 | 0.072 | 92.7 | 0.839 | -57.4 |
| 2150 | 0.717 | -140.4 | 5.24 | 95.0 | 0.073 | 93.0 | 0.844 | -58.8 |
| 2200 | 0.718 | -141.9 | 5.08 | 93.3 | 0.073 | 94.2 | 0.845 | -60.1 |
| 2250 | 0.721 | -143.2 | 4.99 | 91.2 | 0.074 | 96.2 | 0.849 | -61.4 |
| 2300 | 0.724 | -144.5 | 4.78 | 89.0 | 0.077 | 98.3 | 0.852 | -62.9 |
| 2350 | 0.730 | -145.6 | 4.64 | 87.7 | 0.081 | 99.2 | 0.858 | -64.5 |
| 2400 | 0.735 | -146.9 | 4.45 | 85.7 | 0.085 | 99.4 | 0.862 | -66.5 |
| 2450 | 0.740 | -147.9 | 4.33 | 85.4 | 0.087 | 99.3 | 0.867 | -68.0 |
| 2500 | 0.746 | -148.4 | 4.39 | 85.5 | 0.089 | 99.5 | 0.875 | -69.1 |

### Table 5. Cellular Mixer S11 in High-Gain High-Linearity Mode

| FREQUENCY (MHz) | S11 (MAG) | S11 (PHASE) |
|---|---|---|
| 700 | 0.803 | -17.5 |
| 750 | 0.792 | -18.1 |
| 800 | 0.799 | -18.8 |
| 850 | 0.769 | -20.2 |
| 900 | 0.761 | -21.9 |
| 950 | 0.751 | -23.9 |
| 1000 | 0.738 | -26.7 |

### Table 6. PCS Mixer S11 in High-Gain High-Linearity Mode

| FREQUENCY (MHz) | S11 (MAG) | S11 (PHASE) |
|---|---|---|
| 1700 | 0.764 | -42.6 |
| 1750 | 0.763 | -44.1 |
| 1800 | 0.764 | -45.8 |
| 1850 | 0.763 | -47.3 |
| 1900 | 0.765 | -48.5 |
| 1950 | 0.762 | -50.0 |
| 2000 | 0.762 | -50.1 |
| 2050 | 0.762 | -50.0 |
| 2100 | 0.762 | -49.9 |
| 2150 | 0.762 | -49.9 |
| 2200 | 0.762 | -50.0 |
| 2250 | 0.762 | -50.0 |
| 2300 | 0.762 | -49.9 |
| 2350 | 0.762 | -50.1 |
| 2400 | 0.751 | -64.4 |
| 2450 | 0.750 | -64.3 |
| 2500 | 0.750 | -64.2 |

## Table 7. Mixer IF Port S22

| FREQUENCY (MHz) | DIGITAL MIXER (SINGLE-ENDED) | | FREQUENCY (MHz) | FM MIXER | |
|---|---|---|---|---|---|
| | S22 (MAG) | S22 (PHASE) | | S22 (MAG) | S22 (PHASE) |
| 50 | 0.999 | -2.1 | 50 | 0.998 | -1.7 |
| 100 | 0.997 | -4.1 | 70 | 0.998 | -2.5 |
| 110 | 0.996 | -4.5 | 85 | 0.998 | -2.8 |
| 130 | 0.995 | -5.5 | 100 | 0.998 | -3.6 |
| 150 | 0.994 | -6.2 | 110 | 0.998 | -4.0 |
| 200 | 0.993 | -8.2 | 150 | 0.998 | -5.4 |
| 210 | 0.992 | -8.6 | 200 | 0.998 | -7.2 |
| 250 | 0.986 | -10.0 | 250 | 0.997 | -8.9 |
| 300 | 0.983 | -12.0 | 300 | 0.997 | -10.6 |
| 350 | 0.982 | -13.9 | 350 | 0.997 | -12.1 |
| 400 | 0.977 | -15.8 | 400 | 0.997 | -13.8 |

## Typical Application Circuits

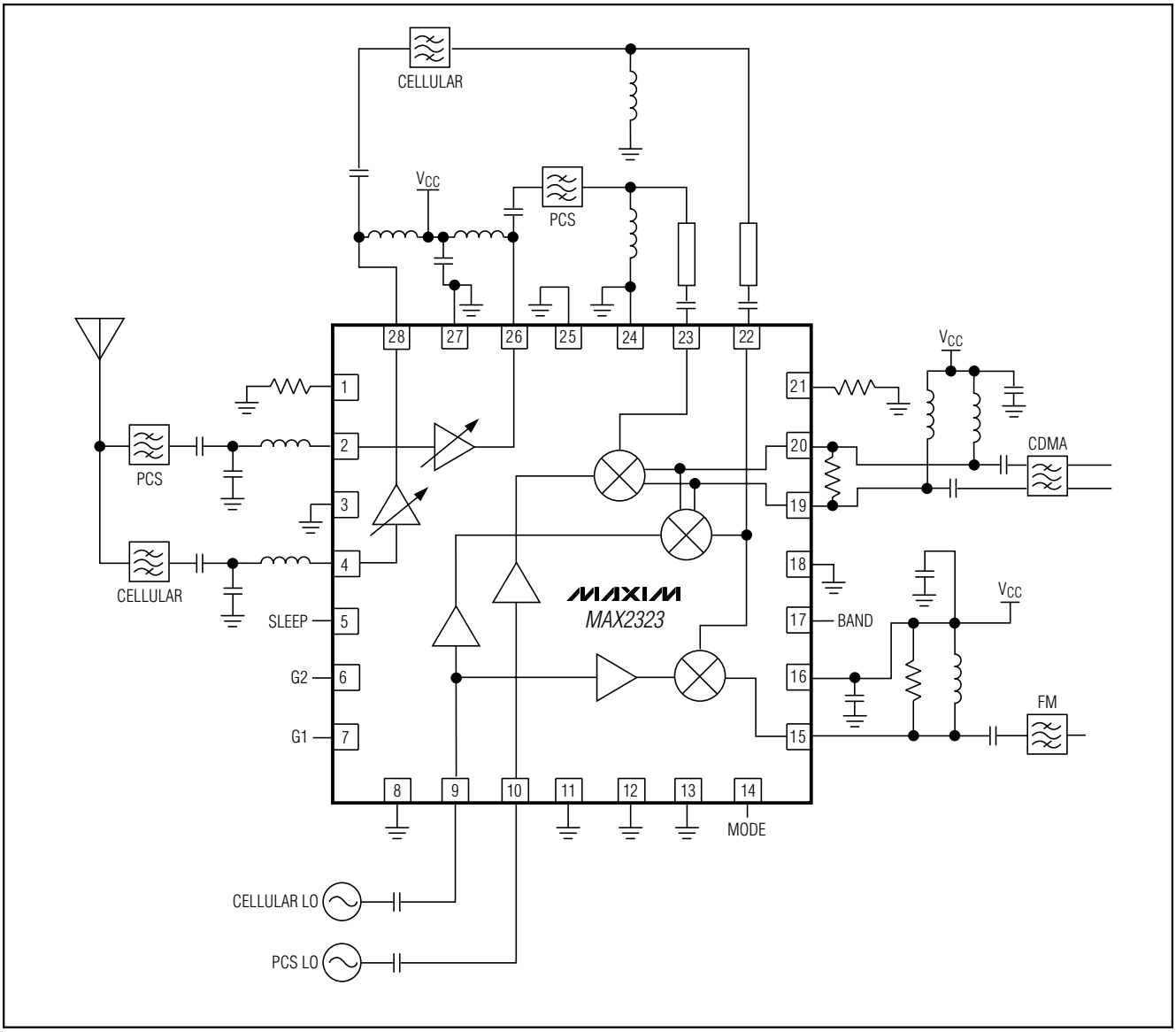

# Triple/Dual-Mode CDMA LNA/Mixers

## Typical Application Circuits (continued)

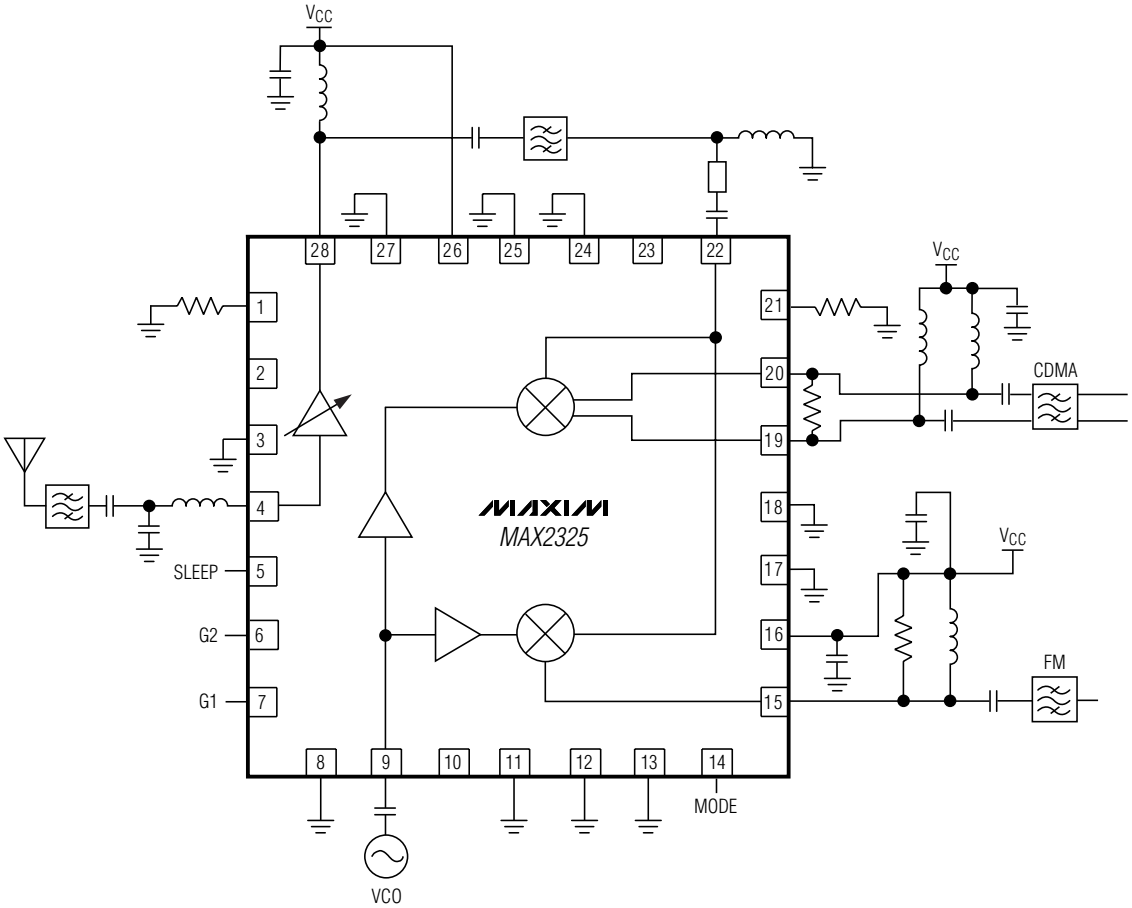

## Component List

| DESIGNATION | QTY | DESCRIPTION |
|---|---|---|
| C1, C4, C9, C24, C29 | 5 | 0.01µF ±10% ceramic caps (0402) Murata GRM36X7R103K016 or Taiyo Yuden EMK105B103KW |
| C2, C3, C21, C22, C27 | 5 | 100pF ±5% ceramic caps (0402) Murata GRM36COG101J050 or Taiyo Yuden UMK105CH101JW |
| C17 | 1 | 2.7pF ±0.1pF ceramic cap (0402) Murata GRM36COG2R7B050 or Taiyo Yuden EVK105CH2R7JW |
| C7 | 1 | 3.0pF ±0.1pF ceramic cap (0402) Murata GRM36COG3R0B050 or Taiyo Yuden EVK105CH3R0JW |
| C8 | 1 | 1.5pF ±0.1pF ceramic cap (0402) Murata GRM36COG1R5B050 or Taiyo Yuden EVK105CH1R5BW |
| C12 | 1 | 0Ω resistor (0402) |
| C6, C10 | — | Not installed |
| C11, C18, C19, C26, C28, C32, C33 | 7 | 1000pF ±10% ceramic caps (0402) Murata GRM36X7R102K050 or Taiyo Yuden UMK105B102KW |
| C5, C14, C16 | 3 | 6800pF ±10% capacitors (0402) Murata GRM36X7R682K025 or Taiyo Yuden TMK105B682KW |
| C15 | 1 | 1.0pF ±0.1pF ceramic cap (0402) Murata GRM36COG010B050 or Taiyo Yuden EVK105CH010BW |
| C23, C25 | 2 | 5.6pF ±0.25pF ceramic caps (0402) Murata GRM36COG5R6C050 |
| C31 | 1 | 4.3pF ±0.1pF ceramic cap (0402) Murata GRM36COG4R3B050 or Taiyo Yuden EVK105CH4R3JW |
| L1 | 1 | 8.2nH ±5% inductor (0603) Murata LQG11A8N2J00 |
| L2, L4 | 2 | 1.8nH ±10% inductors (0603) Coilcraft 0603CS-1N8XKBC |
| L3, L6 | 2 | 0Ω resistors (0603) |
| L5 | 1 | 6.8nH ±5% inductor (0603) Murata LQG11A6N8J00 |

| DESIGNATION | QTY | DESCRIPTION |
|---|---|---|
| L7, L8 | 2 | 270nH ±2% inductors (0805) Coilcraft 0805CS-271XGBC |
| L10 | 1 | 3.9nH ±0.3nH inductor (0603) Murata LQG11A3N9S00 |
| L11 | 1 | 330nH ±2% inductor (0805) Coilcraft 0805CS-331XGBC |
| L12 | 1 | 2.7nH ±0.3nH inductor (0603) Murata LQG11A2N7S00 |
| R1, R4, R5, R8, R10 | 5 | 1kΩ ±5% resistors (0402) |
| R2 | 1 | 24.3kΩ ±1% resistor (0402) |
| R3 | 1 | 20.0kΩ ±1% resistor (0402) |
| R7 | 1 | 2.7kΩ ±5% resistor (0402) |
| R11 | 1 | 8.2kΩ ±5% resistor (0402) |
| T1 | 1 | Balun transformer (B5F type) Toko 458DB-1011 |
| PLNAIN, CLNAIN, LOLIN, LOHIN, CLNAOUT, PLNAOUT, CDMAOUT, FMOUT | 8 | SMA connectors (PC edge mount) EFJohnson 142-0701-801 or Digi-Key J502-ND |
| PMIXIN, CMIXIN | 2 | SMA connectors (vertical mount) Digi-Key J500-ND |
| GND, VCC | 2 | Test points Mouser 151-203 |
| JU1, JU3, JU4, JU7, JU9 | 5 | 3-pin headers |
| JU2, JU6, JU8, JU10 | 4 | 2-pin headers |
| None | 10 | Shunts (JU1–JU4, JU6–JU10) |
| U1 | 1 | MAX2323EGI (QFN-28) |
| None | 1 | MAX2323/MAX2325 data sheet |
| None | 1 | MAX2323 PC board |

# Triple/Dual-Mode CDMA LNA/Mixers

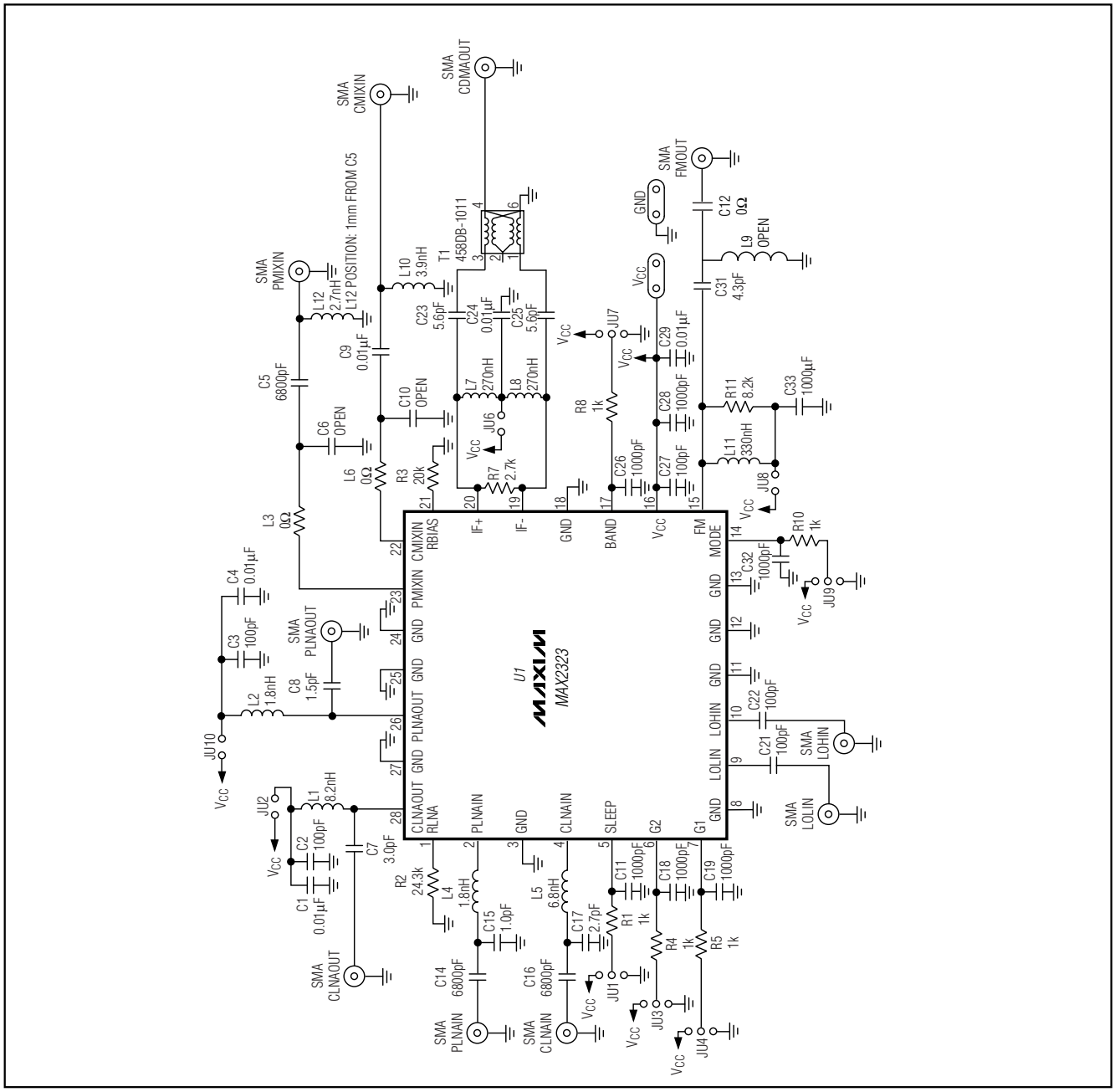


*Figure 1. MAX2323 Evaluation Kit*

## Package Information

For the latest package outline information, go to **www.maxim-ic.com/packages**.

*Maxim cannot assume responsibility for use of any circuitry other than circuitry entirely embodied in a Maxim product. No circuit patent licenses are implied. Maxim reserves the right to change the circuitry and specifications without notice at any time.*



© 2000 Maxim Integrated Products Printed USA MAXIM is a registered trademark of Maxim Integrated Products.

НИОКР СИСТЕМС

**ООО «НИОКРсистемс» -** это оперативные поставки широкого спектра электронных компонентов отечественного и импортного производства напрямую от производителей и с крупнейших мировых складов. Реализуемая нашей компанией продукция насчитывает более полумиллиона наименований.

Благодаря этому наша компания предлагает к поставке практически не ограниченный ассортимент компонентов как оптовыми, мелкооптовыми партиями, так и в розницу.

Благодаря развитой сети поставщиков, помогаем в поиске и приобретении экзотичных или снятых с производства компонентов.

## Наша компания это:

- Гарантия качества поставляемой продукции
- Широкий ассортимент
- Минимальные сроки поставок
- Техническая поддержка
- Подбор комплектации
- Индивидуальный подход
- Гибкое ценообразование
- Работаем по 275 ФЗ

ООО «НИОКР СИТЕМС»
Москва, 125362, Россия, ул. Вишневая, д. 9, к. 1, Блок 104 а и 104 в

Телефон: 8 (495) 268-14-82
Email: n@nsistems.ru

ИНН: 7735154786
ОГРН: 1167746717709