Schottky Rectifier, 1.1 A

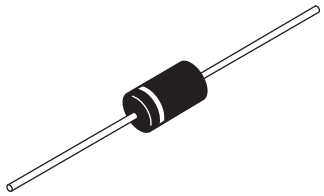

DO-204AL

FEATURES

- Low profile, axial leaded outline
- High frequency operation
- Very low forward voltage drop
- High purity, high temperature epoxy encapsulation for enhanced mechanical strength and moisture resistance
- Guard ring for enhanced ruggedness and long term reliability
- Compliant to RoHS Directive 2002/95/EC
- Designed and qualified for commercial level
- Halogen-free according to IEC 61249-2-21 definition (-M3 only)

RoHS COMPLIANT
HALOGEN FREE Available

PRODUCT SUMMARY	
Package	DO-204AL (DO-41)
$I_{F(AV)}$	1.1 A
V_R	30 V, 40 V
V_F at I_F	See Electrical table
I_{RM} max.	6.0 mA at 125 °C
T_J max.	150 °C
Diode variation	Single die
E_{AS}	3.0 mJ

DESCRIPTION

The VS-11DQ... axial leaded Schottky rectifier has been optimized for very low forward voltage drop, with moderate leakage. Typical applications are in switching power supplies, converters, freewheeling diodes, and reverse battery protection.

MAJOR RATINGS AND CHARACTERISTICS			
SYMBOL	CHARACTERISTICS	VALUES	UNITS
$I_{F(AV)}$	Rectangular waveform	1.1	A
V_{RRM}		30/40	V
I_{FSM}	t_p = 5 µs sine	225	A
V_F	1 Apk, T_J = 25 °C	0.55	V
T_J	Range	- 40 to 150	°C

VOLTAGE RATINGS						
PARAMETER	SYMBOL	VS-11DQ03	VS-11DQ03-M3	VS-11DQ04	VS-11DQ04-M3	UNITS
Maximum DC reverse voltage	V_R	30	30	40	40	V
Maximum working peak reverse voltage	V_{RWM}					

ABSOLUTE MAXIMUM					
PARAMETER	SYMBOL	TEST CONDITIONS		VALUES	UNITS
Maximum average forward current See fig. 4	$I_{F(AV)}$	50 % duty cycle at T_C = 75 °C, rectangular waveform		1.1	A
Maximum peak one cycle non-repetitive surge current See fig. 6	I_{FSM}	5 µs sine or 3 µs rect. pulse	Following any rated load condition and with rated V_{RRM} applied	225	
		10 ms sine or 6 ms rect. pulse		35	
Non-repetitive avalanche energy	E_{AS}	T_J = 25 °C, I_{AS} = 1.0 A, L = 6 mH		3.0	mJ
Repetitive avalanche current	I_{AR}	Current decaying linearly to zero in 1 µs Frequency limited by T_J maximum V_A = 1.5 x V_R typical		1.0	A

For technical questions within your region: DiodesAmericas@vishay.com, DiodesAsia@vishay.com, DiodesEurope@vishay.com
THIS DOCUMENT IS SUBJECT TO CHANGE WITHOUT NOTICE. THE PRODUCTS DESCRIBED HEREIN AND THIS DOCUMENT ARE SUBJECT TO SPECIFIC DISCLAIMERS, SET FORTH AT www.vishay.com/doc?91000

ELECTRICAL SPECIFICATIONS					
PARAMETER	SYMBOL	TEST CONDITIONS		VALUES	UNITS
Maximum forward voltage drop See fig. 1	V_{FM} (1)	1 A	T_J = 25 °C	0.55	V
		2 A		0.71	
		1 A	T_J = 125 °C	0.50	
		2 A		0.61	
Maximum reverse leakage current See fig. 2	I_{RM} (1)	T_J = 25 °C	V_R = Rated V_R	1.0	mA
		T_J = 125 °C		6.0	
Typical junction capacitance	C_T	V_R = 5 V_{DC} (test signal range 100 kHz to 1 MHz) 25 °C		60	pF
Typical series inductance	L_S	Measured lead to lead 5 mm from package body		8.0	nH
Maximum voltage rate of change	dV/dt	Rated V_R		10 000	V/µs

Note

(1) Pulse width < 300 µs, duty cycle < 2 %

THERMAL - MECHANICAL SPECIFICATIONS				
PARAMETER	SYMBOL	TEST CONDITIONS	VALUES	UNITS
Maximum junction and storage temperature range	T_J (1), T_{Stg}		- 40 to 150	°C
Maximum thermal resistance, junction to ambient	R_{thJA}	DC operation Without cooling fin	100	°C/W
Typical thermal resistance, junction to lead	R_{thJL}	DC operation See fig. 4	81	
Approximate weight			0.33	g
			0.012	oz.
Marking device		Case style DO-204AL (DO-41)	11DQ03	
			11DQ04	

Note

(1) $\frac{dP_{tot}}{dT_J} < \frac{1}{R_{thJA}}$ thermal runaway condition for a diode on its own heatsink

For technical questions within your region: DiodesAmericas@vishay.com, DiodesAsia@vishay.com, DiodesEurope@vishay.com
THIS DOCUMENT IS SUBJECT TO CHANGE WITHOUT NOTICE. THE PRODUCTS DESCRIBED HEREIN AND THIS DOCUMENT ARE SUBJECT TO SPECIFIC DISCLAIMERS, SET FORTH AT www.vishay.com/doc?91000

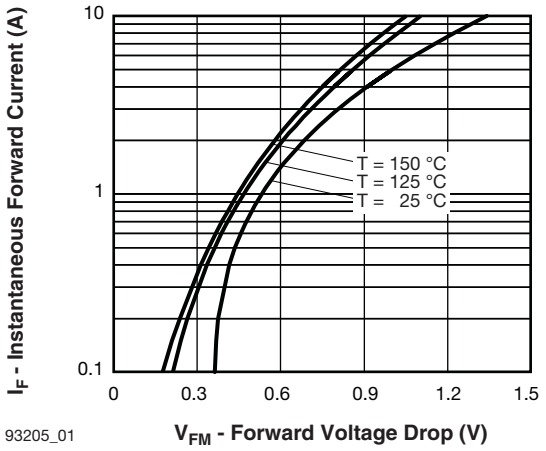

Fig. 1 - Maximum Forward Voltage Drop Characteristics

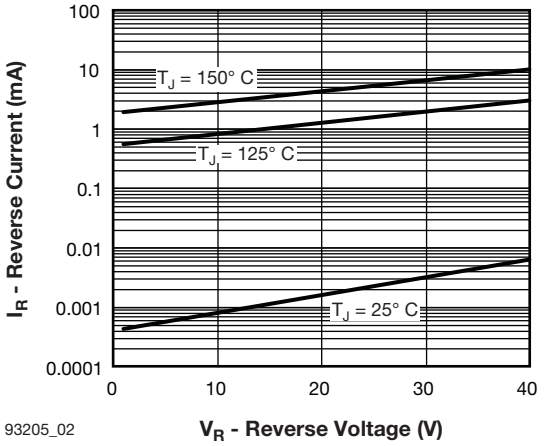

Fig. 2 - Typical Values of Reverse Current vs. Reverse Voltage

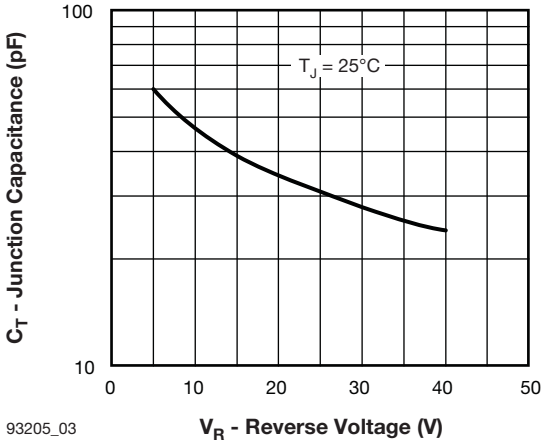

Fig. 3 - Typical Junction Capacitance vs. Reverse Voltage

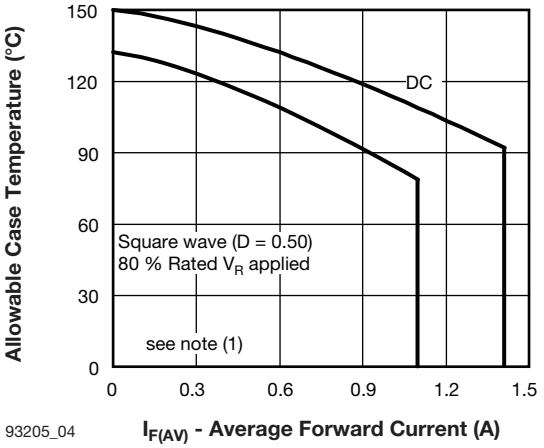

Fig. 4 - Maximum Allowable Case Temperature vs. Average Forward Current

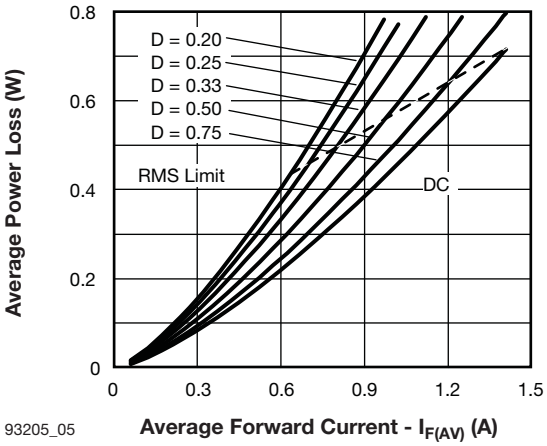

Fig. 5 - Forward Power Loss Characteristics

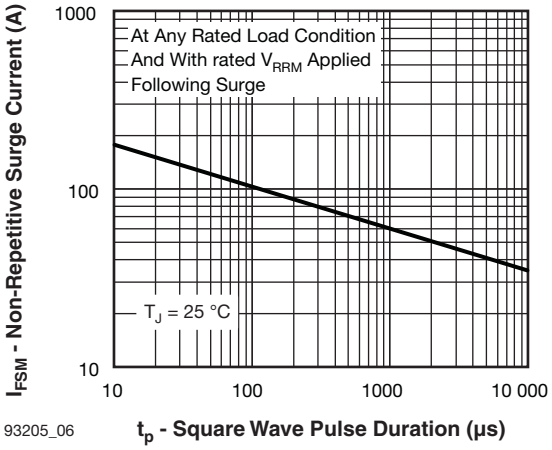

Fig. 6 - Maximum Non-Repetitive Surge Current

Note

(1) Formula used: $T_C = T_J - (Pd + Pd_{REV}) \times R_{thJC}$;
Pd = Forward power loss = $I_{F(AV)} \times V_{FM}$ at ($I_{F(AV)}$/D) (see fig. 6); Pd_{REV} = Inverse power loss = $V_{R1} \times I_R$ (1 - D); I_R at V_{R1} = 80 % rated V_R

For technical questions within your region: DiodesAmericas@vishay.com, DiodesAsia@vishay.com, DiodesEurope@vishay.com
THIS DOCUMENT IS SUBJECT TO CHANGE WITHOUT NOTICE. THE PRODUCTS DESCRIBED HEREIN AND THIS DOCUMENT ARE SUBJECT TO SPECIFIC DISCLAIMERS, SET FORTH AT www.vishay.com/doc?91000

ORDERING INFORMATION TABLE

Device code	VS-	11	D	Q	04	TR	-M3
	1	2	3	4	5	6	7

1 - Vishay Semiconductors product

2 - 11 = 1.1 A (axial and small packages - current is x 10)

3 - D = DO-41 package

4 - Q = Schottky Q.. series

5 - 04 = Voltage ratings (03 = 30 V; 04 = 40 V)

6 - TR = Tape and reel package
None = Bulk package

7 - Environmental digit
- None = Lead (Pb)-free and RoHS compliant
- -M3 = Halogen-free, RoHS compliant, and terminations lead (Pb)-free

ORDERING INFORMATION (Example)			
PREFERRED P/N	**QUANTITY PER T/R**	**MINIMUM ORDER QUANTITY**	**PACKAGING DESCRIPTION**
VS-11DQ03	1000	1000	Bulk
VS-11DQ03TR	5000	5000	Tape and reel
VS-11DQ03-M3	1000	1000	Bulk
VS-11DQ03TR-M3	5000	5000	Tape and reel
VS-11DQ04	1000	1000	Bulk
VS-11DQ04TR	5000	5000	Tape and reel
VS-11DQ04-M3	1000	1000	Bulk
VS-11DQ04TR-M3	5000	5000	Tape and reel

LINKS TO RELATED DOCUMENTS	
Dimensions	www.vishay.com/doc?95241
Part marking information	www.vishay.com/doc?95304
Packaging information	www.vishay.com/doc?95338

For technical questions within your region: DiodesAmericas@vishay.com, DiodesAsia@vishay.com, DiodesEurope@vishay.com
THIS DOCUMENT IS SUBJECT TO CHANGE WITHOUT NOTICE. THE PRODUCTS DESCRIBED HEREIN AND THIS DOCUMENT ARE SUBJECT TO SPECIFIC DISCLAIMERS, SET FORTH AT www.vishay.com/doc?91000

Axial DO-204AL (DO-41)

DIMENSIONS in millimeters (inches)

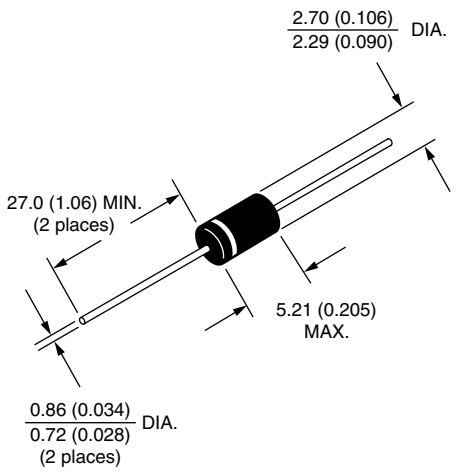

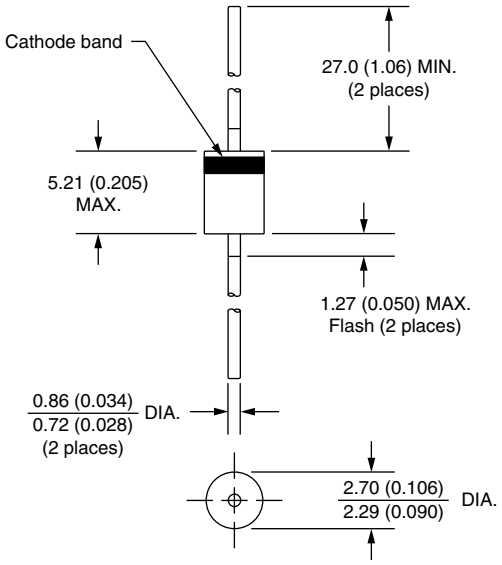

For technical questions within your region: DiodesAmericas@vishay.com, DiodesAsia@vishay.com, DiodesEurope@vishay.com

THIS DOCUMENT IS SUBJECT TO CHANGE WITHOUT NOTICE. THE PRODUCTS DESCRIBED HEREIN AND THIS DOCUMENT ARE SUBJECT TO SPECIFIC DISCLAIMERS, SET FORTH AT www.vishay.com/doc?91000

Disclaimer

ALL PRODUCT, PRODUCT SPECIFICATIONS AND DATA ARE SUBJECT TO CHANGE WITHOUT NOTICE TO IMPROVE RELIABILITY, FUNCTION OR DESIGN OR OTHERWISE.

Vishay Intertechnology, Inc., its affiliates, agents, and employees, and all persons acting on its or their behalf (collectively, "Vishay"), disclaim any and all liability for any errors, inaccuracies or incompleteness contained in any datasheet or in any other disclosure relating to any product.

Vishay makes no warranty, representation or guarantee regarding the suitability of the products for any particular purpose or the continuing production of any product. To the maximum extent permitted by applicable law, Vishay disclaims (i) any and all liability arising out of the application or use of any product, (ii) any and all liability, including without limitation special, consequential or incidental damages, and (iii) any and all implied warranties, including warranties of fitness for particular purpose, non-infringement and merchantability.

Statements regarding the suitability of products for certain types of applications are based on Vishay's knowledge of typical requirements that are often placed on Vishay products in generic applications. Such statements are not binding statements about the suitability of products for a particular application. It is the customer's responsibility to validate that a particular product with the properties described in the product specification is suitable for use in a particular application. Parameters provided in datasheets and/or specifications may vary in different applications and performance may vary over time. All operating parameters, including typical parameters, must be validated for each customer application by the customer's technical experts. Product specifications do not expand or otherwise modify Vishay's terms and conditions of purchase, including but not limited to the warranty expressed therein.

Except as expressly indicated in writing, Vishay products are not designed for use in medical, life-saving, or life-sustaining applications or for any other application in which the failure of the Vishay product could result in personal injury or death. Customers using or selling Vishay products not expressly indicated for use in such applications do so at their own risk and agree to fully indemnify and hold Vishay and its distributors harmless from and against any and all claims, liabilities, expenses and damages arising or resulting in connection with such use or sale, including attorneys fees, even if such claim alleges that Vishay or its distributor was negligent regarding the design or manufacture of the part. Please contact authorized Vishay personnel to obtain written terms and conditions regarding products designed for such applications.

No license, express or implied, by estoppel or otherwise, to any intellectual property rights is granted by this document or by any conduct of Vishay. Product names and markings noted herein may be trademarks of their respective owners.

Material Category Policy

Vishay Intertechnology, Inc. hereby certifies that all its products that are identified as RoHS-Compliant fulfill the definitions and restrictions defined under Directive 2011/65/EU of The European Parliament and of the Council of June 8, 2011 on the restriction of the use of certain hazardous substances in electrical and electronic equipment (EEE) - recast, unless otherwise specified as non-compliant.

Please note that some Vishay documentation may still make reference to RoHS Directive 2002/95/EC. We confirm that all the products identified as being compliant to Directive 2002/95/EC conform to Directive 2011/65/EU.

НИОКР СИСТЕМС

ООО «НИОКРсистемс» - это оперативные поставки широкого спектра электронных компонентов отечественного и импортного производства напрямую от производителей и с крупнейших мировых складов. Реализуемая нашей компанией продукция насчитывает более полумиллиона наименований.

Благодаря этому наша компания предлагает к поставке практически не ограниченный ассортимент компонентов как оптовыми, мелкооптовыми партиями, так и в розницу.

Благодаря развитой сети поставщиков, помогаем в поиске и приобретении экзотичных или снятых с производства компонентов.

Наша компания это:

- Гарантия качества поставляемой продукции
- Широкий ассортимент
- Минимальные сроки поставок
- Техническая поддержка
- Подбор комплектации
- Индивидуальный подход
- Гибкое ценообразование
- Работаем по 275 ФЗ

ООО «НИОКР СИТЕМС»
Москва, 125362, Россия, ул. Вишневая, д. 9, к. 1, Блок 104 а и 104 в

Телефон: 8 (495) 268-14-82
Email: n@nsistems.ru

ИНН: 7735154786
ОГРН: 1167746717709