STP80NF12

N-channel 120 V, 0.013 Ω, 80 A, TO-220
STripFET™ II Power MOSFET

Features

Type	V_{DSS}	$R_{DS(on)}$ max	I_D
STP80NF12	120 V	< 0.018 Ω	80 A

- Exceptional dv/dt capability
- 100% avalanche tested
- Application oriented characterization

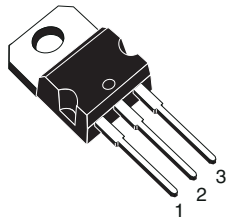

TO-220

Application

- Switching applications

Description

This MOSFET series realized with STMicroelectronics unique STripFET process has specifically been designed to minimize input capacitance and gate charge. It is therefore suitable as primary switch in advanced high-efficiency, high-frequency isolated DC-DC converters for telecom and computer applications. It is also intended for any applications with low gate drive requirements.

Figure 1. Internal schematic diagram

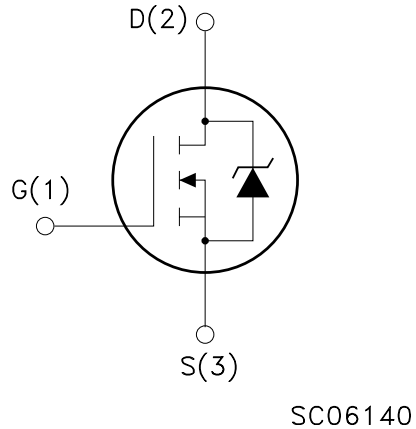

Table 1. Device summary

Order code	Marking	Package	Packaging
STP80NF12	P80NF12	TO-220	Tube

Contents

1 Electrical ratings 3

2 Electrical characteristics 4

2.1 Electrical characteristics (curves) 6

3 Test circuit 8

4 Package mechanical data 9

5 Revision history 11

1 Electrical ratings

Table 2. Absolute maximum ratings

Symbol	Parameter	Value	Unit
V_{DS}	Drain-source voltage (V_{GS} = 0)	120	V
V_{GS}	Gate-source voltage	± 20	V
I_D (1)	Drain current (continuous) at T_C = 25 °C	80	A
I_D	Drain current (continuous) at T_C=100 °C	60	A
I_{DM}(2)	Drain current (pulsed)	320	A
P_{TOT}	Total dissipation at T_C = 25 °C	300	W
	Derating factor	2.0	W/°C
dv/dt (3)	Peak diode recovery voltage slope	10	V/ns
E_{AS} (4)	Single pulse avalanche energy	350	mJ
T_J T_{stg}	Operating junction temperature Storage temperature	-55 to 175	°C

1. Limited by Package
2. Pulse width limited by safe operating area
3. I_{SD} < 80 A, di/dt < 300 A/µs, V_{DD}= 80% $V_{(BR)DSS}$
4. Starting T_J = 25 °C, I_D = 40 A, V_{DD} = 50 V

Table 3. Thermal data

Symbol	Parameter	Value	Unit
R_{thJC}	Thermal resistance junction-case max	0.5	°C/W
R_{thJA}	Thermal resistance junction-ambient max	62.5	°C/W
T_l	Maximum lead temperature for soldering purpose	300	°C

2 Electrical characteristics

(T_{CASE} = 25 °C unless otherwise specified)

Table 4. On/off states

Symbol	Parameter	Test conditions	Min.	Typ.	Max.	Unit
$V_{(BR)DSS}$	Drain-source breakdown voltage	I_D = 250 µA, V_{GS}= 0	120			V
I_{DSS}	Zero gate voltage drain current (V_{GS} = 0)	V_{DS} = Max rating, V_{DS} = Max rating @125°C			1 10	µA µA
I_{GSS}	Gate body leakage current (V_{DS} = 0)	V_{GS} = ±20 V			±100	nA
$V_{GS(th)}$	Gate threshold voltage	V_{DS}= V_{GS}, I_D = 250 µA	2			V
$R_{DS(on)}$	Static drain-source on resistance	V_{GS}= 10 V, I_D= 40 A		0.013	0.018	Ω

Table 5. Dynamic

Symbol	Parameter	Test conditions	Min.	Typ.	Max.	Unit
g_{fs} (1)	Forward transconductance	V_{DS} =15 V, I_D = 40 A		80		S
C_{iss} C_{oss} C_{rss}	Input capacitance Output capacitance Reverse transfer capacitance	V_{DS} =25 V, f=1 MHz, V_{GS}=0		4300 600 230		pF pF pF
Q_g Q_{gs} Q_{gd}	Total gate charge Gate-source charge Gate-drain charge	V_{DD} = 80 V, I_D = 80 A V_{GS} =10 V		140 23 51	189	nC nC nC

1. Pulsed: pulse duration=300µs, duty cycle 1.5%

Table 6. Switching times

Symbol	Parameter	Test conditions	Min.	Typ.	Max.	Unit
$t_{d(on)}$ t_r $t_{d(off)}$ t_f	Turn-on delay time Rise time Turn-off delay time Fall time	V_{DD}= 50 V, I_D= 40 A, R_G=4.7 Ω, V_{GS}=10 V *Figure 13 on page 8*		40 145 134 115		ns ns ns ns

Table 7. Source drain diode

Symbol	Parameter	Test conditions	Min.	Typ.	Max	Unit
I_{SD}	Source-drain current				80	A
I_{SDM}(1)	Source-drain current (pulsed)				320	A
V_{SD}(2)	Forward on voltage	I_{SD}=80 A, V_{GS}=0			1.3	V
t_{rr} Q_{rr} I_{RRM}	Reverse recovery time Reverse recovery charge Reverse recovery current	I_{SD}=80 A, di/dt = 100 A/µs, V_{DD}=35 V, T_J = 150 °C		155 0.85 11		ns µC A

1. Pulse width limited by safe operating area
2. Pulsed: pulse duration = 300 µs, duty cycle 1.5%

2.1 Electrical characteristics (curves)

Figure 2. Safe operating area

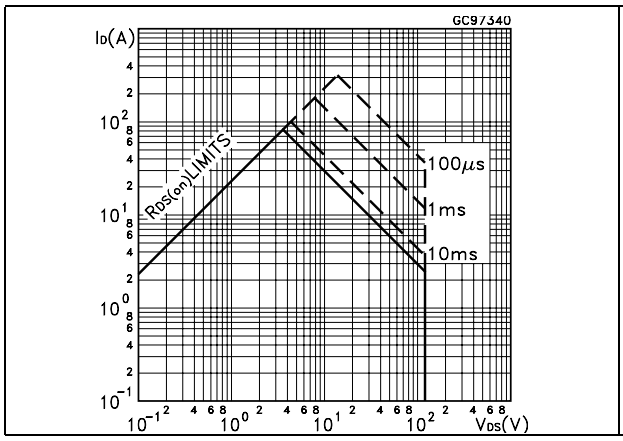

Figure 3. Thermal impedance

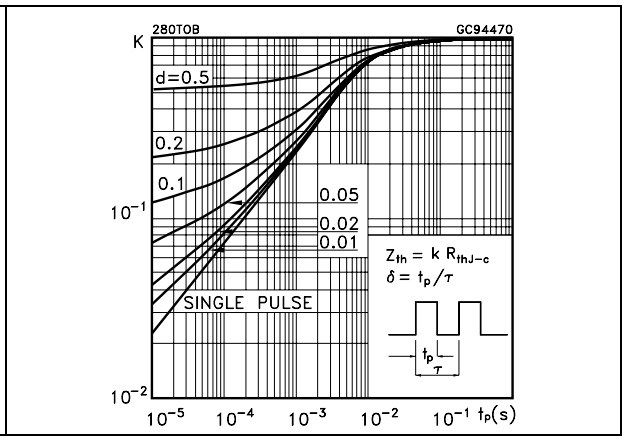

Figure 4. Output characteristics

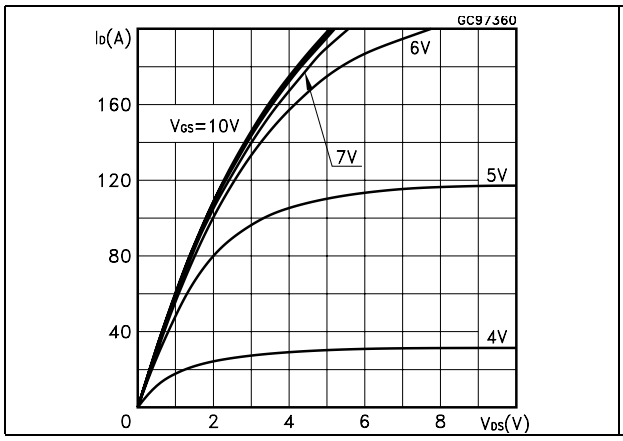

Figure 5. Transfer characteristics

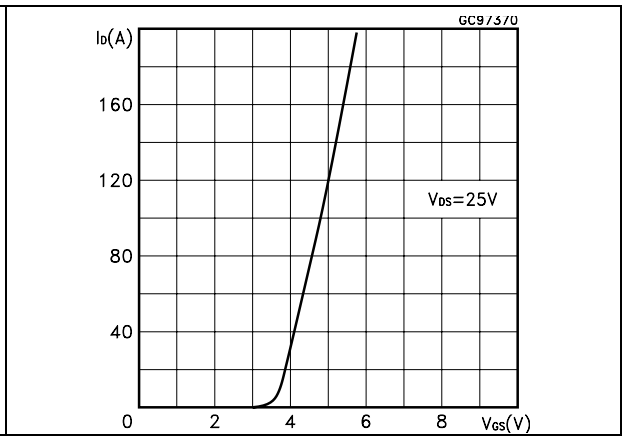

Figure 6. Normalized B_{VDSS} vs. temperature

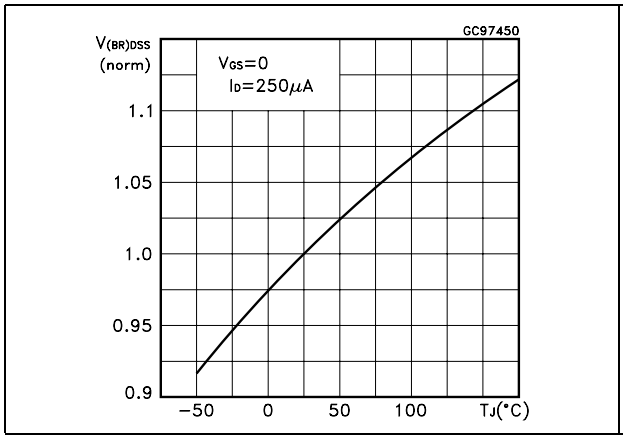

Figure 7. Static drain-source on resistance

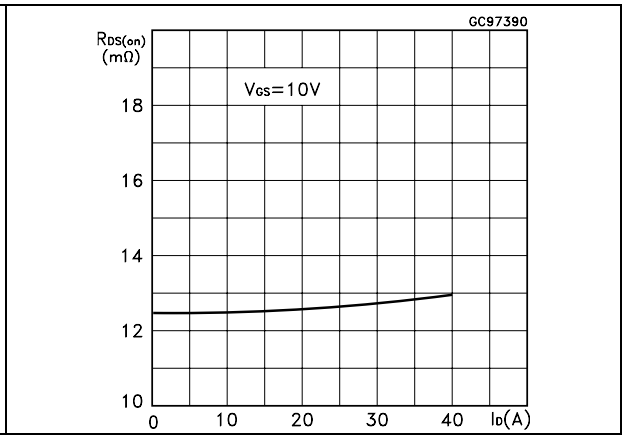

Figure 8. Gate charge vs. gate-source voltage

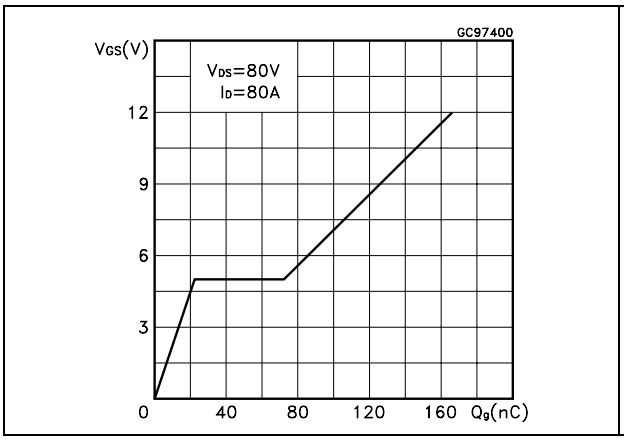

Figure 9. Capacitance variations

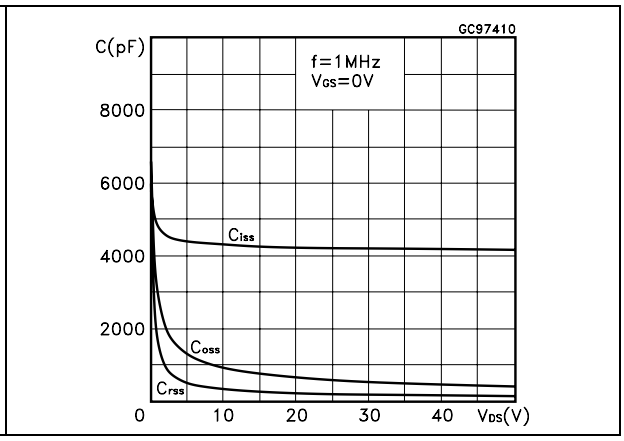

Figure 10. Normalized gate threshold voltage vs. temperature

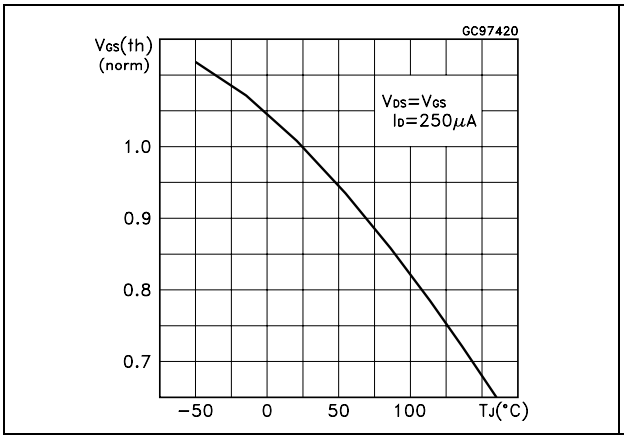

Figure 11. Normalized on resistance vs. temperature

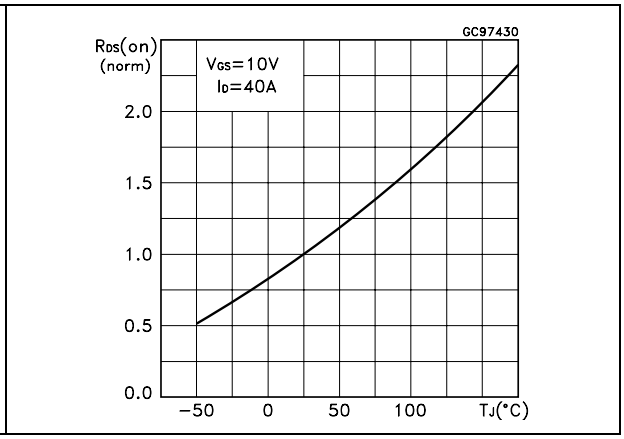

Figure 12. Source-drain diode forward characteristics

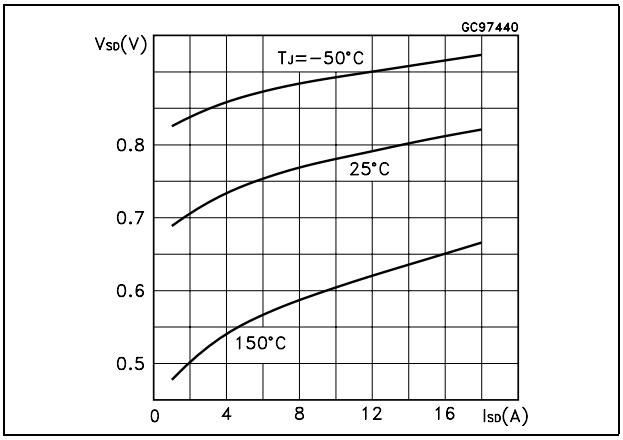

3 Test circuit

Figure 13. Switching times test circuit for resistive load

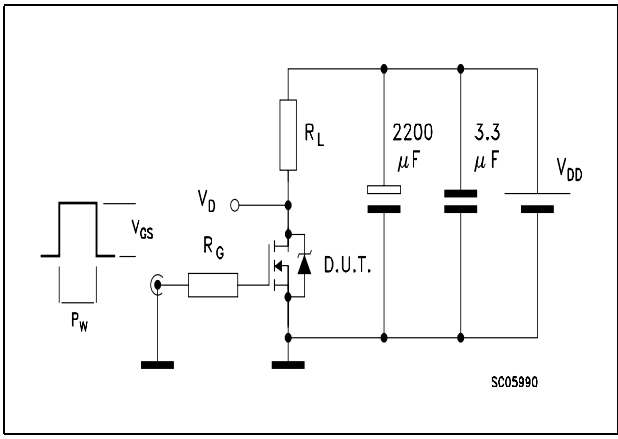

Figure 14. Gate charge test circuit

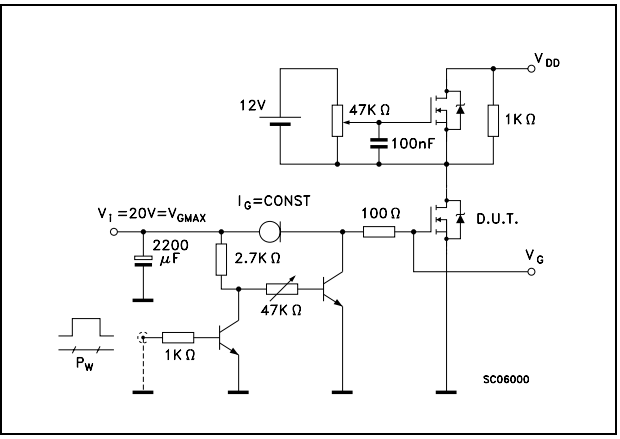

Figure 15. Test circuit for inductive load switching and diode recovery times

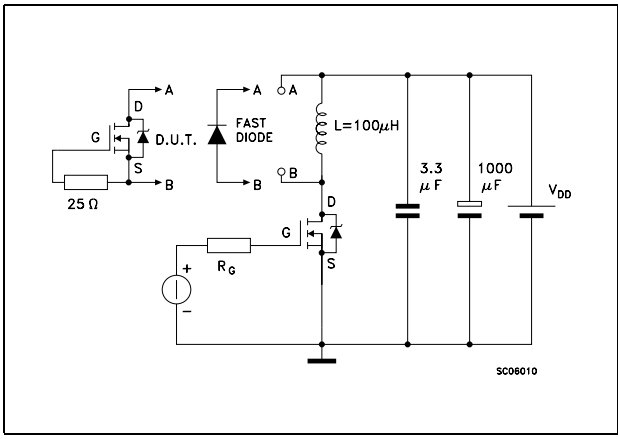

Figure 16. Unclamped Inductive load test circuit

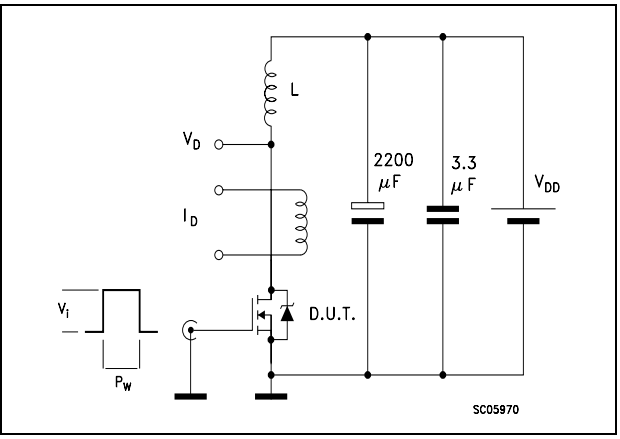

Figure 17. Unclamped inductive waveform

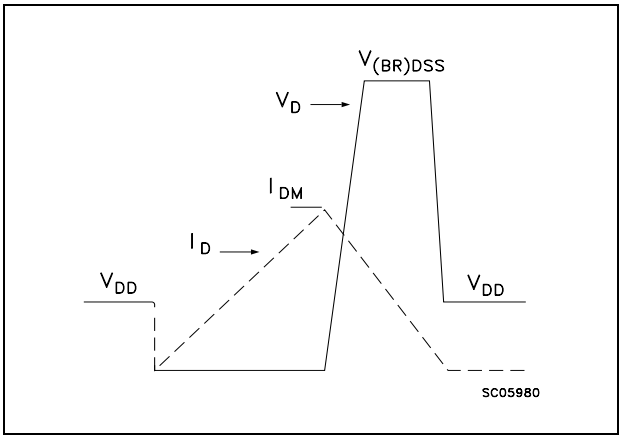

4 Package mechanical data

In order to meet environmental requirements, ST offers these devices in ECOPACK® packages. These packages have a Lead-free second level interconnect. The category of second level interconnect is marked on the package and on the inner box label, in compliance with JEDEC Standard JESD97. The maximum ratings related to soldering conditions are also marked on the inner box label. ECOPACK is an ST trademark. ECOPACK specifications are available at: www.st.com

TO-220 mechanical data

Dim	mm			inch		
	Min	Typ	Max	Min	Typ	Max
A	4.40		4.60	0.173		0.181
b	0.61		0.88	0.024		0.034
b1	1.14		1.70	0.044		0.066
c	0.48		0.70	0.019		0.027
D	15.25		15.75	0.6		0.62
D1		1.27			0.050	
E	10		10.40	0.393		0.409
e	2.40		2.70	0.094		0.106
e1	4.95		5.15	0.194		0.202
F	1.23		1.32	0.048		0.051
H1	6.20		6.60	0.244		0.256
J1	2.40		2.72	0.094		0.107
L	13		14	0.511		0.551
L1	3.50		3.93	0.137		0.154
L20		16.40			0.645	
L30		28.90			1.137	
∅P	3.75		3.85	0.147		0.151
Q	2.65		2.95	0.104		0.116

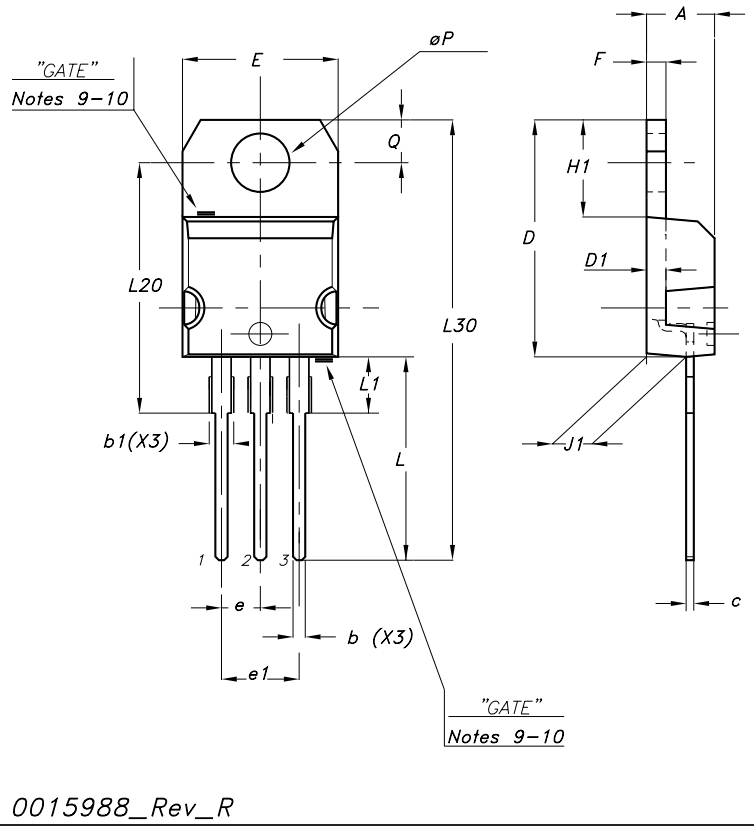

5 Revision history

Table 8. Revision history

Date	Revision	Changes
21-Jun-2004	2	Preliminary version
24-Jul-2006	3	The document has been reformatted, SOA updated
31-Jan-2007	4	Typo mistake on *Table 2*.
10-Apr-2007	5	Typo mistake on *Table 2* and *Table 3*
19-Apr-2007	6	Corrected value on *Table 4*
17-Nov-2008	7	Inserted E_{AS} value on *Table 2*.

Please Read Carefully:

Information in this document is provided solely in connection with ST products. STMicroelectronics NV and its subsidiaries (“ST”) reserve the right to make changes, corrections, modifications or improvements, to this document, and the products and services described herein at any time, without notice.

All ST products are sold pursuant to ST’s terms and conditions of sale.

Purchasers are solely responsible for the choice, selection and use of the ST products and services described herein, and ST assumes no liability whatsoever relating to the choice, selection or use of the ST products and services described herein.

No license, express or implied, by estoppel or otherwise, to any intellectual property rights is granted under this document. If any part of this document refers to any third party products or services it shall not be deemed a license grant by ST for the use of such third party products or services, or any intellectual property contained therein or considered as a warranty covering the use in any manner whatsoever of such third party products or services or any intellectual property contained therein.

UNLESS OTHERWISE SET FORTH IN ST’S TERMS AND CONDITIONS OF SALE ST DISCLAIMS ANY EXPRESS OR IMPLIED WARRANTY WITH RESPECT TO THE USE AND/OR SALE OF ST PRODUCTS INCLUDING WITHOUT LIMITATION IMPLIED WARRANTIES OF MERCHANTABILITY, FITNESS FOR A PARTICULAR PURPOSE (AND THEIR EQUIVALENTS UNDER THE LAWS OF ANY JURISDICTION), OR INFRINGEMENT OF ANY PATENT, COPYRIGHT OR OTHER INTELLECTUAL PROPERTY RIGHT.

UNLESS EXPRESSLY APPROVED IN WRITING BY AN AUTHORIZED ST REPRESENTATIVE, ST PRODUCTS ARE NOT RECOMMENDED, AUTHORIZED OR WARRANTED FOR USE IN MILITARY, AIR CRAFT, SPACE, LIFE SAVING, OR LIFE SUSTAINING APPLICATIONS, NOR IN PRODUCTS OR SYSTEMS WHERE FAILURE OR MALFUNCTION MAY RESULT IN PERSONAL INJURY, DEATH, OR SEVERE PROPERTY OR ENVIRONMENTAL DAMAGE. ST PRODUCTS WHICH ARE NOT SPECIFIED AS "AUTOMOTIVE GRADE" MAY ONLY BE USED IN AUTOMOTIVE APPLICATIONS AT USER’S OWN RISK.

Resale of ST products with provisions different from the statements and/or technical features set forth in this document shall immediately void any warranty granted by ST for the ST product or service described herein and shall not create or extend in any manner whatsoever, any liability of ST.

ST and the ST logo are trademarks or registered trademarks of ST in various countries.

Information in this document supersedes and replaces all information previously supplied.

The ST logo is a registered trademark of STMicroelectronics. All other names are the property of their respective owners.

© 2008 STMicroelectronics - All rights reserved

STMicroelectronics group of companies

Australia - Belgium - Brazil - Canada - China - Czech Republic - Finland - France - Germany - Hong Kong - India - Israel - Italy - Japan - Malaysia - Malta - Morocco - Singapore - Spain - Sweden - Switzerland - United Kingdom - United States of America

www.st.com

НИОКР СИСТЕМС

ООО «НИОКРсистемс» - это оперативные поставки широкого спектра электронных компонентов отечественного и импортного производства напрямую от производителей и с крупнейших мировых складов. Реализуемая нашей компанией продукция насчитывает более полумиллиона наименований.

Благодаря этому наша компания предлагает к поставке практически не ограниченный ассортимент компонентов как оптовыми, мелкооптовыми партиями, так и в розницу.

Благодаря развитой сети поставщиков, помогаем в поиске и приобретении экзотичных или снятых с производства компонентов.

Наша компания это:

- Гарантия качества поставляемой продукции
- Широкий ассортимент
- Минимальные сроки поставок
- Техническая поддержка
- Подбор комплектации
- Индивидуальный подход
- Гибкое ценообразование
- Работаем по 275 ФЗ

ООО «НИОКР СИТЕМС»
Москва, 125362, Россия, ул. Вишневая, д. 9, к. 1, Блок 104 а и 104 в

Телефон: 8 (495) 268-14-82
Email: n@nsistems.ru

ИНН: 7735154786
ОГРН: 1167746717709