- **Meets or Exceeds TIA/EIA-232-F and ITU Recommendation V.28**
- **Operates From a Single 5-V Power Supply With 1.0-μF Charge-Pump Capacitors**
- **Operates Up To 120 kbit/s**
- **Two Drivers and Two Receivers**
- **±30-V Input Levels**
- **Low Supply Current . . . 8 mA Typical**
- **ESD Protection Exceeds JESD 22**
  - **2000-V Human-Body Model (A114-A)**
- **Upgrade With Improved ESD (15-kV HBM) and 0.1-μF Charge-Pump Capacitors is Available With the MAX202**
- **Applications**
  - **TIA/EIA-232-F, Battery-Powered Systems, Terminals, Modems, and Computers**

**MAX232 . . . D, DW, N, OR NS PACKAGE**
**MAX232I . . . D, DW, OR N PACKAGE**
**(TOP VIEW)**

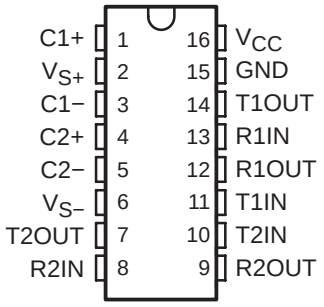


## description/ordering information

The MAX232 is a dual driver/receiver that includes a capacitive voltage generator to supply TIA/EIA-232-F voltage levels from a single 5-V supply. Each receiver converts TIA/EIA-232-F inputs to 5-V TTL/CMOS levels. These receivers have a typical threshold of 1.3 V, a typical hysteresis of 0.5 V, and can accept ±30-V inputs. Each driver converts TTL/CMOS input levels into TIA/EIA-232-F levels. The driver, receiver, and voltage-generator functions are available as cells in the Texas Instruments LinASIC™ library.

**ORDERING INFORMATION**

| $T_A$ | PACKAGE† | | ORDERABLE PART NUMBER | TOP-SIDE MARKING |
|---|---|---|---|---|
| 0°C to 70°C | PDIP (N) | Tube of 25 | MAX232N | MAX232N |
| | SOIC (D) | Tube of 40 | MAX232D | MAX232 |
| | | Reel of 2500 | MAX232DR | |
| | SOIC (DW) | Tube of 40 | MAX232DW | MAX232 |
| | | Reel of 2000 | MAX232DWR | |
| | SOP (NS) | Reel of 2000 | MAX232NSR | MAX232 |
| −40°C to 85°C | PDIP (N) | Tube of 25 | MAX232IN | MAX232IN |
| | SOIC (D) | Tube of 40 | MAX232ID | MAX232I |
| | | Reel of 2500 | MAX232IDR | |
| | SOIC (DW) | Tube of 40 | MAX232IDW | MAX232I |
| | | Reel of 2000 | MAX232IDWR | |

† Package drawings, standard packing quantities, thermal data, symbolization, and PCB design guidelines are available at www.ti.com/sc/package.

Please be aware that an important notice concerning availability, standard warranty, and use in critical applications of Texas Instruments semiconductor products and disclaimers thereto appears at the end of this data sheet.

LinASIC is a trademark of Texas Instruments.

PRODUCTION DATA information is current as of publication date. Products conform to specifications per the terms of Texas Instruments standard warranty. Production processing does not necessarily include testing of all parameters.

Copyright © 2004, Texas Instruments Incorporated

## Function Tables

**EACH DRIVER**

| INPUT TIN | OUTPUT TOUT |
|---|---|
| L | H |
| H | L |

H = high level, L = low level

**EACH RECEIVER**

| INPUT RIN | OUTPUT ROUT |
|---|---|
| L | H |
| H | L |

H = high level, L = low level

## logic diagram (positive logic)

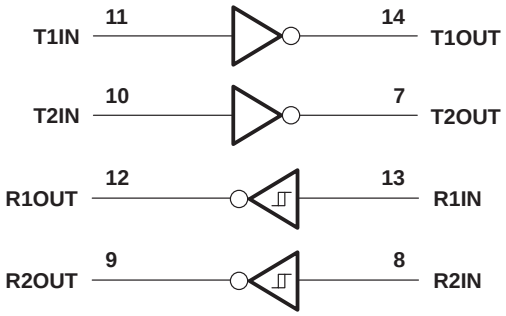

## absolute maximum ratings over operating free-air temperature range (unless otherwise noted)†

Input supply voltage range, $V_{CC}$ (see Note 1) . . . . . −0.3 V to 6 V
Positive output supply voltage range, $V_{S+}$ . . . . . $V_{CC}$ − 0.3 V to 15 V
Negative output supply voltage range, $V_{S-}$ . . . . . −0.3 V to −15 V
Input voltage range, $V_I$: Driver . . . . . −0.3 V to $V_{CC}$ + 0.3 V
Receiver . . . . . ±30 V
Output voltage range, $V_O$: T1OUT, T2OUT . . . . . $V_{S-}$ − 0.3 V to $V_{S+}$ + 0.3 V
R1OUT, R2OUT . . . . . −0.3 V to $V_{CC}$ + 0.3 V
Short-circuit duration: T1OUT, T2OUT . . . . . Unlimited
Package thermal impedance, $\theta_{JA}$ (see Notes 2 and 3): D package . . . . . 73°C/W
DW package . . . . . 57°C/W
N package . . . . . 67°C/W
NS package . . . . . 64°C/W
Operating virtual junction temperature, $T_J$ . . . . . 150°C
Storage temperature range, $T_{stg}$ . . . . . −65°C to 150°C

† Stresses beyond those listed under “absolute maximum ratings” may cause permanent damage to the device. These are stress ratings only, and functional operation of the device at these or any other conditions beyond those indicated under “recommended operating conditions” is not implied. Exposure to absolute-maximum-rated conditions for extended periods may affect device reliability.

NOTES: 1. All voltages are with respect to network GND.
2. Maximum power dissipation is a function of $T_J$(max), $\theta_{JA}$, and $T_A$. The maximum allowable power dissipation at any allowable ambient temperature is $P_D = (T_J(max) - T_A)/\theta_{JA}$. Operating at the absolute maximum $T_J$ of 150°C can affect reliability.
3. The package thermal impedance is calculated in accordance with JESD 51-7.

## recommended operating conditions

| | | | MIN | NOM | MAX | UNIT |
|---|---|---|---|---|---|---|
| $V_{CC}$ | Supply voltage | | 4.5 | 5 | 5.5 | V |
| $V_{IH}$ | High-level input voltage (T1IN,T2IN) | | 2 | | | V |
| $V_{IL}$ | Low-level input voltage (T1IN, T2IN) | | | | 0.8 | V |
| R1IN, R2IN | Receiver input voltage | | | | ±30 | V |
| $T_A$ | Operating free-air temperature | MAX232 | 0 | | 70 | °C |
| | | MAX232I | −40 | | 85 | |

## electrical characteristics over recommended ranges of supply voltage and operating free-air temperature (unless otherwise noted) (see Note 4 and Figure 4)

| PARAMETER | | TEST CONDITIONS | | MIN | TYP‡ | MAX | UNIT |
|---|---|---|---|---|---|---|---|
| $I_{CC}$ | Supply current | $V_{CC}$ = 5.5 V, $T_A$ = 25°C | All outputs open, | | 8 | 10 | mA |

‡ All typical values are at $V_{CC}$ = 5 V and $T_A$ = 25°C.

NOTE 4: Test conditions are C1−C4 = 1 μF at $V_{CC}$ = 5 V ± 0.5 V.

## DRIVER SECTION

### electrical characteristics over recommended ranges of supply voltage and operating free-air temperature range (see Note 4)

| PARAMETER | | | TEST CONDITIONS | MIN | TYP† | MAX | UNIT |
|---|---|---|---|---|---|---|---|
| $V_{OH}$ | High-level output voltage | T1OUT, T2OUT | $R_L$ = 3 kΩ to GND | 5 | 7 | | V |
| $V_{OL}$ | Low-level output voltage‡ | T1OUT, T2OUT | $R_L$ = 3 kΩ to GND | | −7 | −5 | V |
| $r_o$ | Output resistance | T1OUT, T2OUT | $V_{S+} = V_{S-} = 0$, $V_O = \pm 2$ V | 300 | | | Ω |
| $I_{OS}$§ | Short-circuit output current | T1OUT, T2OUT | $V_{CC}$ = 5.5 V, $V_O$ = 0 | | ±10 | | mA |
| $I_{IS}$ | Short-circuit input current | T1IN, T2IN | $V_I$ = 0 | | | 200 | µA |

† All typical values are at $V_{CC}$ = 5 V, $T_A$ = 25°C.
‡ The algebraic convention, in which the least-positive (most negative) value is designated minimum, is used in this data sheet for logic voltage levels only.
§ Not more than one output should be shorted at a time.
NOTE 4: Test conditions are C1−C4 = 1 µF at $V_{CC}$ = 5 V ± 0.5 V.

### switching characteristics, $V_{CC}$ = 5 V, $T_A$ = 25°C (see Note 4)

| PARAMETER | | TEST CONDITIONS | MIN | TYP | MAX | UNIT |
|---|---|---|---|---|---|---|
| SR | Driver slew rate | $R_L$ = 3 kΩ to 7 kΩ, See Figure 2 | | | 30 | V/µs |
| SR(t) | Driver transition region slew rate | See Figure 3 | | 3 | | V/µs |
| | Data rate | One TOUT switching | | 120 | | kbit/s |

NOTE 4: Test conditions are C1−C4 = 1 µF at $V_{CC}$ = 5 V ± 0.5 V.

## RECEIVER SECTION

### electrical characteristics over recommended ranges of supply voltage and operating free-air temperature range (see Note 4)

| PARAMETER | | | TEST CONDITIONS | MIN | TYP† | MAX | UNIT |
|---|---|---|---|---|---|---|---|
| $V_{OH}$ | High-level output voltage | R1OUT, R2OUT | $I_{OH}$ = −1 mA | 3.5 | | | V |
| $V_{OL}$ | Low-level output voltage‡ | R1OUT, R2OUT | $I_{OL}$ = 3.2 mA | | | 0.4 | V |
| $V_{IT+}$ | Receiver positive-going input threshold voltage | R1IN, R2IN | $V_{CC}$ = 5 V, $T_A$ = 25°C | | 1.7 | 2.4 | V |
| $V_{IT-}$ | Receiver negative-going input threshold voltage | R1IN, R2IN | $V_{CC}$ = 5 V, $T_A$ = 25°C | 0.8 | 1.2 | | V |
| $V_{hys}$ | Input hysteresis voltage | R1IN, R2IN | $V_{CC}$ = 5 V | 0.2 | 0.5 | 1 | V |
| $r_i$ | Receiver input resistance | R1IN, R2IN | $V_{CC}$ = 5, $T_A$ = 25°C | 3 | 5 | 7 | kΩ |

† All typical values are at $V_{CC}$ = 5 V, $T_A$ = 25°C.
‡ The algebraic convention, in which the least-positive (most negative) value is designated minimum, is used in this data sheet for logic voltage levels only.
NOTE 4: Test conditions are C1−C4 = 1 µF at $V_{CC}$ = 5 V ± 0.5 V.

### switching characteristics, $V_{CC}$ = 5 V, $T_A$ = 25°C (see Note 4 and Figure 1)

| PARAMETER | | TYP | UNIT |
|---|---|---|---|
| $t_{PLH(R)}$ | Receiver propagation delay time, low- to high-level output | 500 | ns |
| $t_{PHL(R)}$ | Receiver propagation delay time, high- to low-level output | 500 | ns |

NOTE 4: Test conditions are C1−C4 = 1 µF at $V_{CC}$ = 5 V ± 0.5 V.

## PARAMETER MEASUREMENT INFORMATION

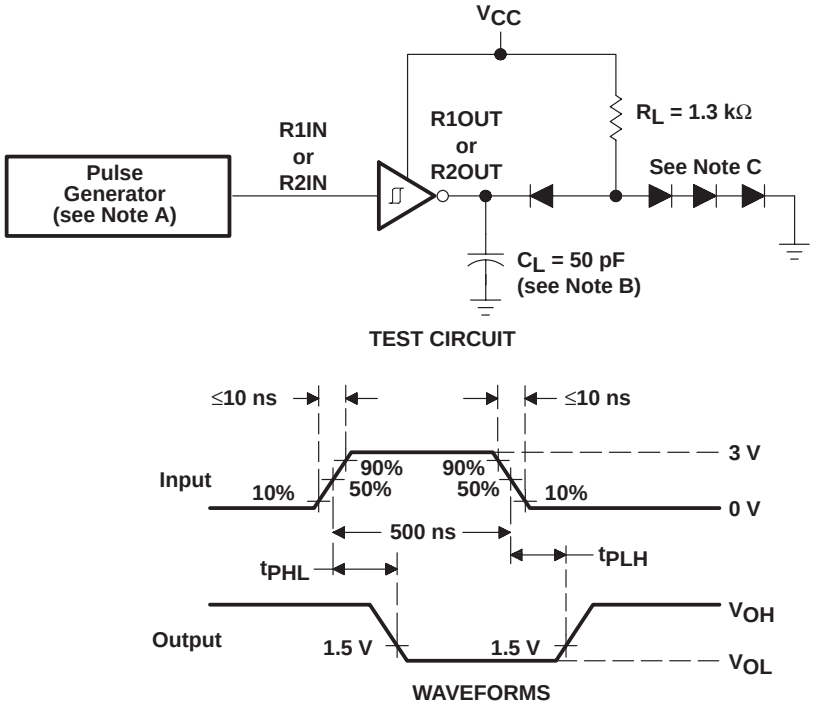


NOTES: A. The pulse generator has the following characteristics: $Z_O$ = 50 Ω, duty cycle ≤ 50%.
B. $C_L$ includes probe and jig capacitance.
C. All diodes are 1N3064 or equivalent.

**Figure 1. Receiver Test Circuit and Waveforms for $t_{PHL}$ and $t_{PLH}$ Measurements**

## PARAMETER MEASUREMENT INFORMATION

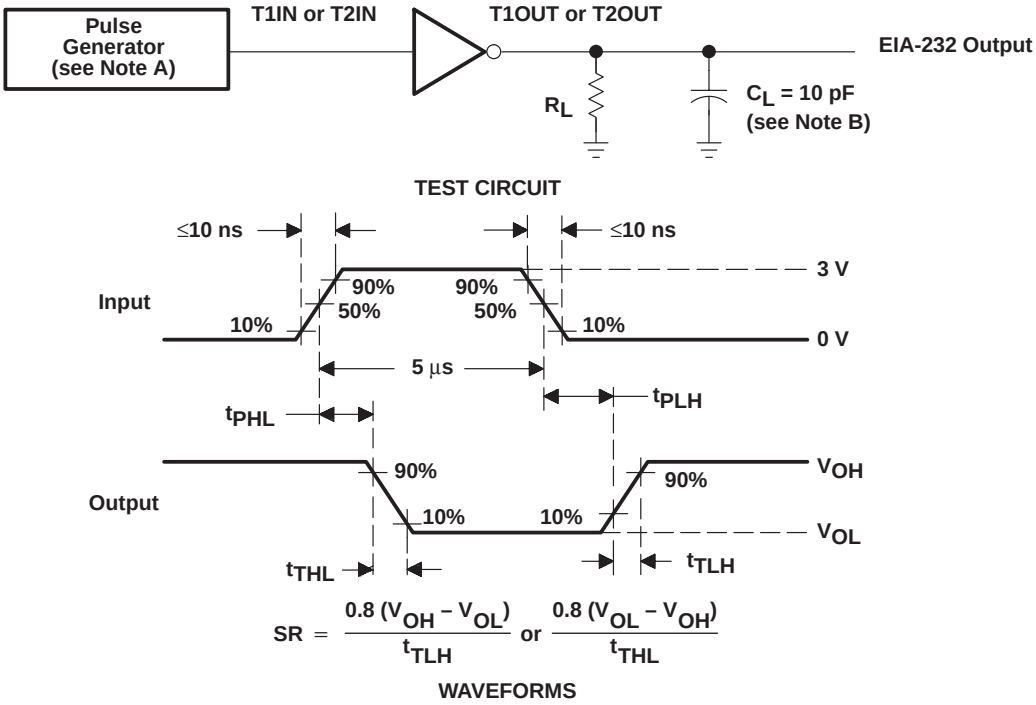


NOTES: A. The pulse generator has the following characteristics: $Z_O$ = 50 Ω, duty cycle ≤ 50%.
B. $C_L$ includes probe and jig capacitance.

**Figure 2. Driver Test Circuit and Waveforms for $t_{PHL}$ and $t_{PLH}$ Measurements (5-µs Input)**

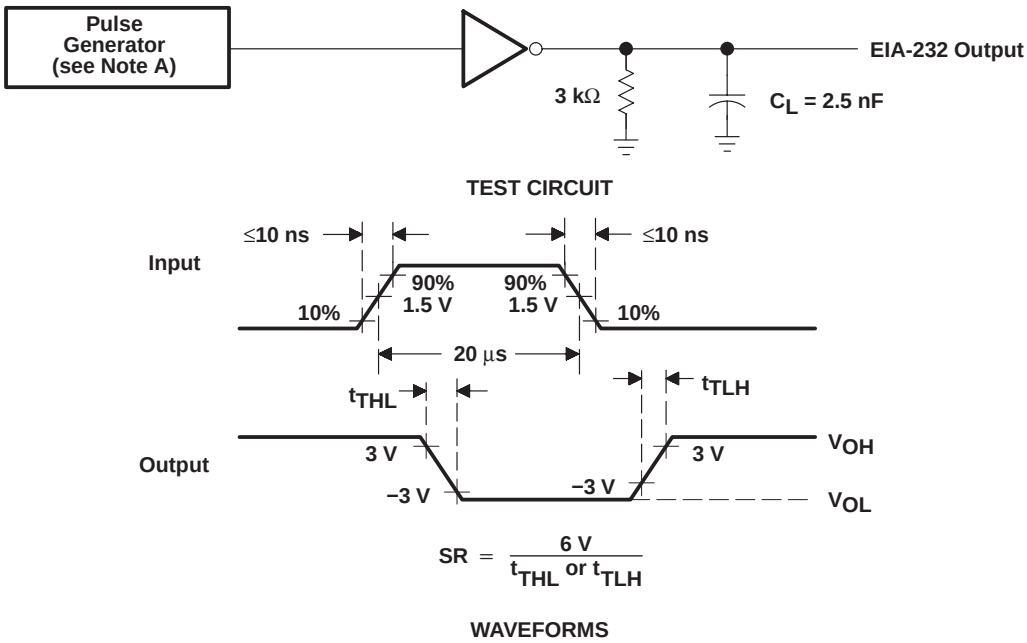


NOTE A: The pulse generator has the following characteristics: $Z_O$ = 50 Ω, duty cycle ≤ 50%.

**Figure 3. Test Circuit and Waveforms for $t_{THL}$ and $t_{TLH}$ Measurements (20-µs Input)**

## APPLICATION INFORMATION

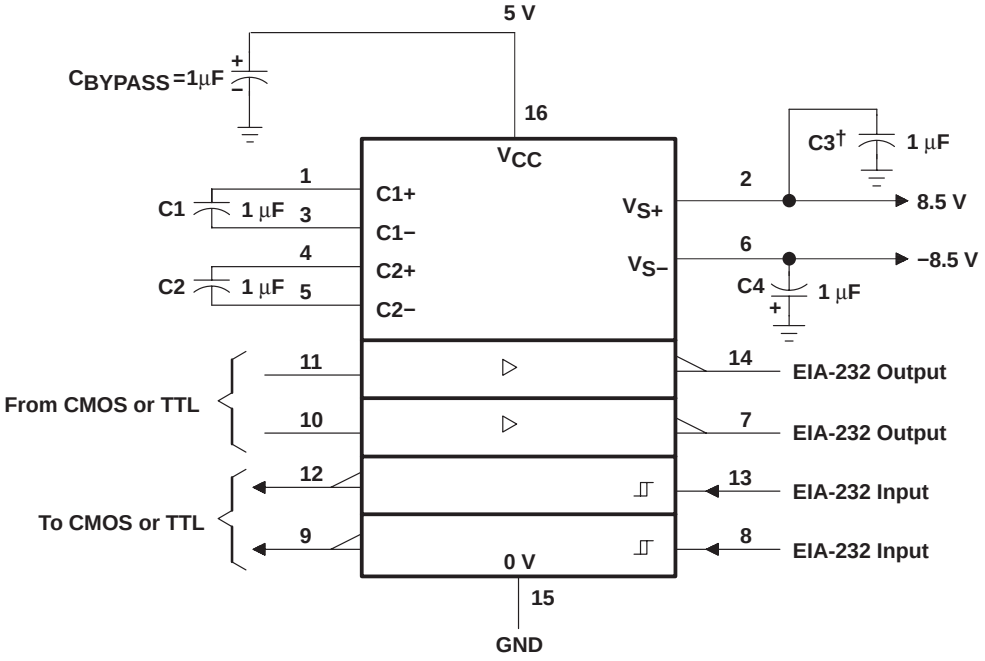


† C3 can be connected to $V_{CC}$ or GND.

NOTES: A. Resistor values shown are nominal.

B. Nonpolarized ceramic capacitors are acceptable. If polarized tantalum or electrolytic capacitors are used, they should be connected as shown. In addition to the 1-µF capacitors shown, the MAX202 can operate with 0.1-µF capacitors.

**Figure 4. Typical Operating Circuit**

## PACKAGING INFORMATION

| Orderable Device | Status (1) | Package Type | Package Drawing | Pins | Package Qty | Eco Plan (2) | Lead/Ball Finish | MSL Peak Temp (3) | Op Temp (°C) | Top-Side Markings (4) | Samples |
|---|---|---|---|---|---|---|---|---|---|---|---|
| MAX232D | ACTIVE | SOIC | D | 16 | 40 | Green (RoHS & no Sb/Br) | CU NIPDAU | Level-1-260C-UNLIM | 0 to 70 | MAX232 | Samples |
| MAX232DE4 | ACTIVE | SOIC | D | 16 | 40 | Green (RoHS & no Sb/Br) | CU NIPDAU | Level-1-260C-UNLIM | 0 to 70 | MAX232 | Samples |
| MAX232DG4 | ACTIVE | SOIC | D | 16 | 40 | Green (RoHS & no Sb/Br) | CU NIPDAU | Level-1-260C-UNLIM | 0 to 70 | MAX232 | Samples |
| MAX232DR | ACTIVE | SOIC | D | 16 | 2500 | Green (RoHS & no Sb/Br) | CU NIPDAU | Level-1-260C-UNLIM | 0 to 70 | MAX232 | Samples |
| MAX232DRE4 | ACTIVE | SOIC | D | 16 | 2500 | Green (RoHS & no Sb/Br) | CU NIPDAU | Level-1-260C-UNLIM | 0 to 70 | MAX232 | Samples |
| MAX232DRG4 | ACTIVE | SOIC | D | 16 | 2500 | Green (RoHS & no Sb/Br) | CU NIPDAU | Level-1-260C-UNLIM | 0 to 70 | MAX232 | Samples |
| MAX232DW | ACTIVE | SOIC | DW | 16 | 40 | Green (RoHS & no Sb/Br) | CU NIPDAU | Level-1-260C-UNLIM | 0 to 70 | MAX232 | Samples |
| MAX232DWE4 | ACTIVE | SOIC | DW | 16 | 40 | Green (RoHS & no Sb/Br) | CU NIPDAU | Level-1-260C-UNLIM | 0 to 70 | MAX232 | Samples |
| MAX232DWG4 | ACTIVE | SOIC | DW | 16 | 40 | Green (RoHS & no Sb/Br) | CU NIPDAU | Level-1-260C-UNLIM | 0 to 70 | MAX232 | Samples |
| MAX232DWR | ACTIVE | SOIC | DW | 16 | 2000 | Green (RoHS & no Sb/Br) | CU NIPDAU | Level-1-260C-UNLIM | 0 to 70 | MAX232 | Samples |
| MAX232DWRE4 | ACTIVE | SOIC | DW | 16 | 2000 | Green (RoHS & no Sb/Br) | CU NIPDAU | Level-1-260C-UNLIM | 0 to 70 | MAX232 | Samples |
| MAX232DWRG4 | ACTIVE | SOIC | DW | 16 | 2000 | Green (RoHS & no Sb/Br) | CU NIPDAU | Level-1-260C-UNLIM | 0 to 70 | MAX232 | Samples |
| MAX232ID | ACTIVE | SOIC | D | 16 | 40 | Green (RoHS & no Sb/Br) | CU NIPDAU | Level-1-260C-UNLIM | -40 to 85 | MAX232I | Samples |
| MAX232IDE4 | ACTIVE | SOIC | D | 16 | 40 | Green (RoHS & no Sb/Br) | CU NIPDAU | Level-1-260C-UNLIM | -40 to 85 | MAX232I | Samples |
| MAX232IDG4 | ACTIVE | SOIC | D | 16 | 40 | Green (RoHS & no Sb/Br) | CU NIPDAU | Level-1-260C-UNLIM | -40 to 85 | MAX232I | Samples |
| MAX232IDR | ACTIVE | SOIC | D | 16 | 2500 | Green (RoHS & no Sb/Br) | CU NIPDAU | Level-1-260C-UNLIM | -40 to 85 | MAX232I | Samples |
| MAX232IDRE4 | ACTIVE | SOIC | D | 16 | 2500 | Green (RoHS & no Sb/Br) | CU NIPDAU | Level-1-260C-UNLIM | -40 to 85 | MAX232I | Samples |

| Orderable Device | Status (1) | Package Type | Package Drawing | Pins | Package Qty | Eco Plan (2) | Lead/Ball Finish | MSL Peak Temp (3) | Op Temp (°C) | Top-Side Markings (4) | Samples |
|---|---|---|---|---|---|---|---|---|---|---|---|
| MAX232IDRG4 | ACTIVE | SOIC | D | 16 | 2500 | Green (RoHS & no Sb/Br) | CU NIPDAU | Level-1-260C-UNLIM | -40 to 85 | MAX232I | Samples |
| MAX232IDW | ACTIVE | SOIC | DW | 16 | 40 | Green (RoHS & no Sb/Br) | CU NIPDAU | Level-1-260C-UNLIM | -40 to 85 | MAX232I | Samples |
| MAX232IDWE4 | ACTIVE | SOIC | DW | 16 | 40 | Green (RoHS & no Sb/Br) | CU NIPDAU | Level-1-260C-UNLIM | -40 to 85 | MAX232I | Samples |
| MAX232IDWG4 | ACTIVE | SOIC | DW | 16 | 40 | Green (RoHS & no Sb/Br) | CU NIPDAU | Level-1-260C-UNLIM | -40 to 85 | MAX232I | Samples |
| MAX232IDWR | ACTIVE | SOIC | DW | 16 | 2000 | Green (RoHS & no Sb/Br) | CU NIPDAU | Level-1-260C-UNLIM | -40 to 85 | MAX232I | Samples |
| MAX232IDWRE4 | ACTIVE | SOIC | DW | 16 | 2000 | Green (RoHS & no Sb/Br) | CU NIPDAU | Level-1-260C-UNLIM | -40 to 85 | MAX232I | Samples |
| MAX232IDWRG4 | ACTIVE | SOIC | DW | 16 | 2000 | Green (RoHS & no Sb/Br) | CU NIPDAU | Level-1-260C-UNLIM | -40 to 85 | MAX232I | Samples |
| MAX232IN | ACTIVE | PDIP | N | 16 | 25 | Pb-Free (RoHS) | CU NIPDAU | N / A for Pkg Type | -40 to 85 | MAX232IN | Samples |
| MAX232INE4 | ACTIVE | PDIP | N | 16 | 25 | Pb-Free (RoHS) | CU NIPDAU | N / A for Pkg Type | -40 to 85 | MAX232IN | Samples |
| MAX232N | ACTIVE | PDIP | N | 16 | 25 | Pb-Free (RoHS) | CU NIPDAU | N / A for Pkg Type | 0 to 70 | MAX232N | Samples |
| MAX232NE4 | ACTIVE | PDIP | N | 16 | 25 | Pb-Free (RoHS) | CU NIPDAU | N / A for Pkg Type | 0 to 70 | MAX232N | Samples |
| MAX232NSR | ACTIVE | SO | NS | 16 | 2000 | Green (RoHS & no Sb/Br) | CU NIPDAU | Level-1-260C-UNLIM | 0 to 70 | MAX232 | Samples |
| MAX232NSRE4 | ACTIVE | SO | NS | 16 | 2000 | Green (RoHS & no Sb/Br) | CU NIPDAU | Level-1-260C-UNLIM | 0 to 70 | MAX232 | Samples |
| MAX232NSRG4 | ACTIVE | SO | NS | 16 | 2000 | Green (RoHS & no Sb/Br) | CU NIPDAU | Level-1-260C-UNLIM | 0 to 70 | MAX232 | Samples |

(1) The marketing status values are defined as follows:
**ACTIVE:** Product device recommended for new designs.
**LIFEBUY:** TI has announced that the device will be discontinued, and a lifetime-buy period is in effect.
**NRND:** Not recommended for new designs. Device is in production to support existing customers, but TI does not recommend using this part in a new design.
**PREVIEW:** Device has been announced but is not in production. Samples may or may not be available.
**OBSOLETE:** TI has discontinued the production of the device.

(2) Eco Plan - The planned eco-friendly classification: Pb-Free (RoHS), Pb-Free (RoHS Exempt), or Green (RoHS & no Sb/Br) - please check http://www.ti.com/productcontent for the latest availability information and additional product content details.
**TBD:** The Pb-Free/Green conversion plan has not been defined.
**Pb-Free (RoHS):** TI's terms "Lead-Free" or "Pb-Free" mean semiconductor products that are compatible with the current RoHS requirements for all 6 substances, including the requirement that lead not exceed 0.1% by weight in homogeneous materials. Where designed to be soldered at high temperatures, TI Pb-Free products are suitable for use in specified lead-free processes.
**Pb-Free (RoHS Exempt):** This component has a RoHS exemption for either 1) lead-based flip-chip solder bumps used between the die and package, or 2) lead-based die adhesive used between the die and leadframe. The component is otherwise considered Pb-Free (RoHS compatible) as defined above.
**Green (RoHS & no Sb/Br):** TI defines "Green" to mean Pb-Free (RoHS compatible), and free of Bromine (Br) and Antimony (Sb) based flame retardants (Br or Sb do not exceed 0.1% by weight in homogeneous material)

(3) MSL, Peak Temp. -- The Moisture Sensitivity Level rating according to the JEDEC industry standard classifications, and peak solder temperature.

(4) Only one of markings shown within the brackets will appear on the physical device.

**Important Information and Disclaimer:**The information provided on this page represents TI's knowledge and belief as of the date that it is provided. TI bases its knowledge and belief on information provided by third parties, and makes no representation or warranty as to the accuracy of such information. Efforts are underway to better integrate information from third parties. TI has taken and continues to take reasonable steps to provide representative and accurate information but may not have conducted destructive testing or chemical analysis on incoming materials and chemicals. TI and TI suppliers consider certain information to be proprietary, and thus CAS numbers and other limited information may not be available for release.

In no event shall TI's liability arising out of such information exceed the total purchase price of the TI part(s) at issue in this document sold by TI to Customer on an annual basis.

## TAPE AND REEL INFORMATION

**REEL DIMENSIONS**

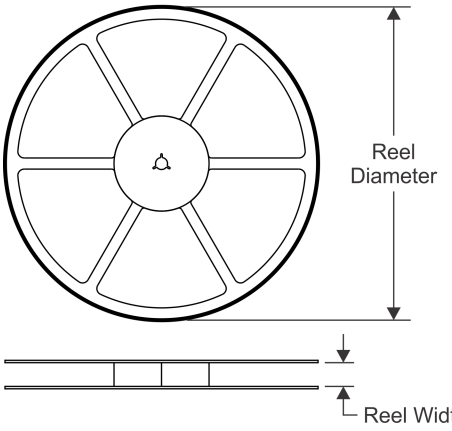


**TAPE DIMENSIONS**

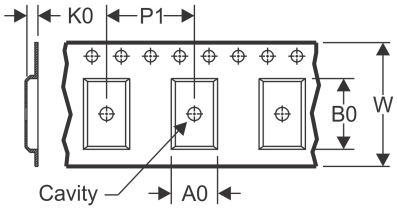


| | |
|---|---|
| A0 | Dimension designed to accommodate the component width |
| B0 | Dimension designed to accommodate the component length |
| K0 | Dimension designed to accommodate the component thickness |
| W | Overall width of the carrier tape |
| P1 | Pitch between successive cavity centers |

**QUADRANT ASSIGNMENTS FOR PIN 1 ORIENTATION IN TAPE**

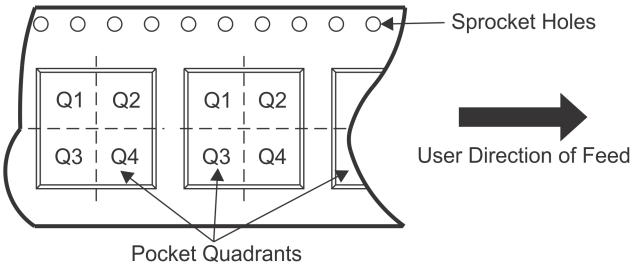


*All dimensions are nominal

| Device | Package Type | Package Drawing | Pins | SPQ | Reel Diameter (mm) | Reel Width W1 (mm) | A0 (mm) | B0 (mm) | K0 (mm) | P1 (mm) | W (mm) | Pin1 Quadrant |
|---|---|---|---|---|---|---|---|---|---|---|---|---|
| MAX232DR | SOIC | D | 16 | 2500 | 330.0 | 16.4 | 6.5 | 10.3 | 2.1 | 8.0 | 16.0 | Q1 |
| MAX232DR | SOIC | D | 16 | 2500 | 330.0 | 16.4 | 6.5 | 10.3 | 2.1 | 8.0 | 16.0 | Q1 |
| MAX232DRG4 | SOIC | D | 16 | 2500 | 330.0 | 16.4 | 6.5 | 10.3 | 2.1 | 8.0 | 16.0 | Q1 |
| MAX232DRG4 | SOIC | D | 16 | 2500 | 330.0 | 16.4 | 6.5 | 10.3 | 2.1 | 8.0 | 16.0 | Q1 |
| MAX232DWR | SOIC | DW | 16 | 2000 | 330.0 | 16.4 | 10.75 | 10.7 | 2.7 | 12.0 | 16.0 | Q1 |
| MAX232DWRG4 | SOIC | DW | 16 | 2000 | 330.0 | 16.4 | 10.75 | 10.7 | 2.7 | 12.0 | 16.0 | Q1 |
| MAX232IDR | SOIC | D | 16 | 2500 | 330.0 | 16.4 | 6.5 | 10.3 | 2.1 | 8.0 | 16.0 | Q1 |
| MAX232IDWR | SOIC | DW | 16 | 2000 | 330.0 | 16.4 | 10.75 | 10.7 | 2.7 | 12.0 | 16.0 | Q1 |
| MAX232IDWRG4 | SOIC | DW | 16 | 2000 | 330.0 | 16.4 | 10.75 | 10.7 | 2.7 | 12.0 | 16.0 | Q1 |
| MAX232NSR | SO | NS | 16 | 2000 | 330.0 | 16.4 | 8.2 | 10.5 | 2.5 | 12.0 | 16.0 | Q1 |

**TAPE AND REEL BOX DIMENSIONS**

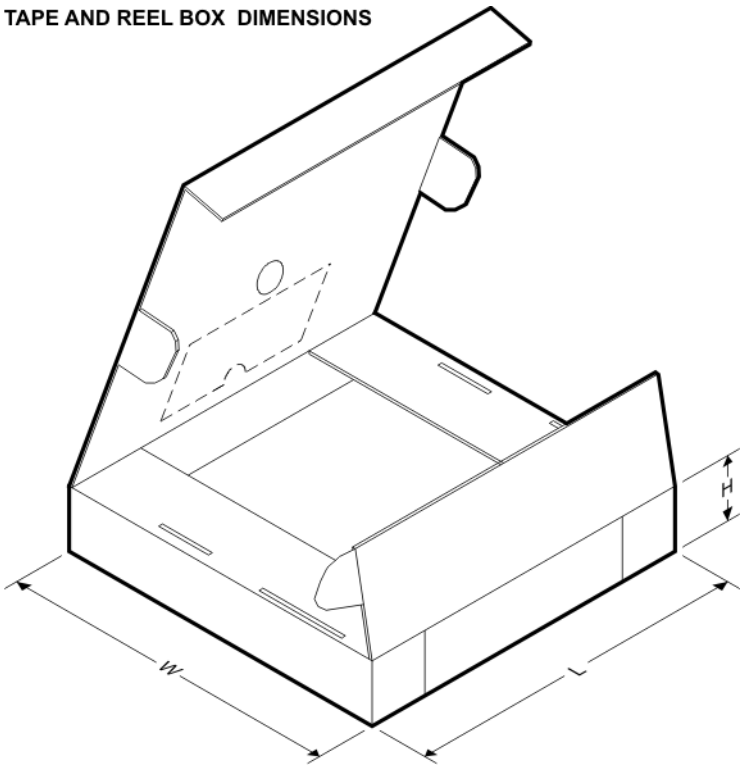


*All dimensions are nominal

| Device | Package Type | Package Drawing | Pins | SPQ | Length (mm) | Width (mm) | Height (mm) |
|---|---|---|---|---|---|---|---|
| MAX232DR | SOIC | D | 16 | 2500 | 367.0 | 367.0 | 38.0 |
| MAX232DR | SOIC | D | 16 | 2500 | 333.2 | 345.9 | 28.6 |
| MAX232DRG4 | SOIC | D | 16 | 2500 | 333.2 | 345.9 | 28.6 |
| MAX232DRG4 | SOIC | D | 16 | 2500 | 367.0 | 367.0 | 38.0 |
| MAX232DWR | SOIC | DW | 16 | 2000 | 366.0 | 364.0 | 50.0 |
| MAX232DWRG4 | SOIC | DW | 16 | 2000 | 367.0 | 367.0 | 38.0 |
| MAX232IDR | SOIC | D | 16 | 2500 | 333.2 | 345.9 | 28.6 |
| MAX232IDWR | SOIC | DW | 16 | 2000 | 366.0 | 364.0 | 50.0 |
| MAX232IDWRG4 | SOIC | DW | 16 | 2000 | 367.0 | 367.0 | 38.0 |
| MAX232NSR | SO | NS | 16 | 2000 | 367.0 | 367.0 | 38.0 |

## N (R–PDIP–T**) PLASTIC DUAL–IN–LINE PACKAGE

16 PINS SHOWN

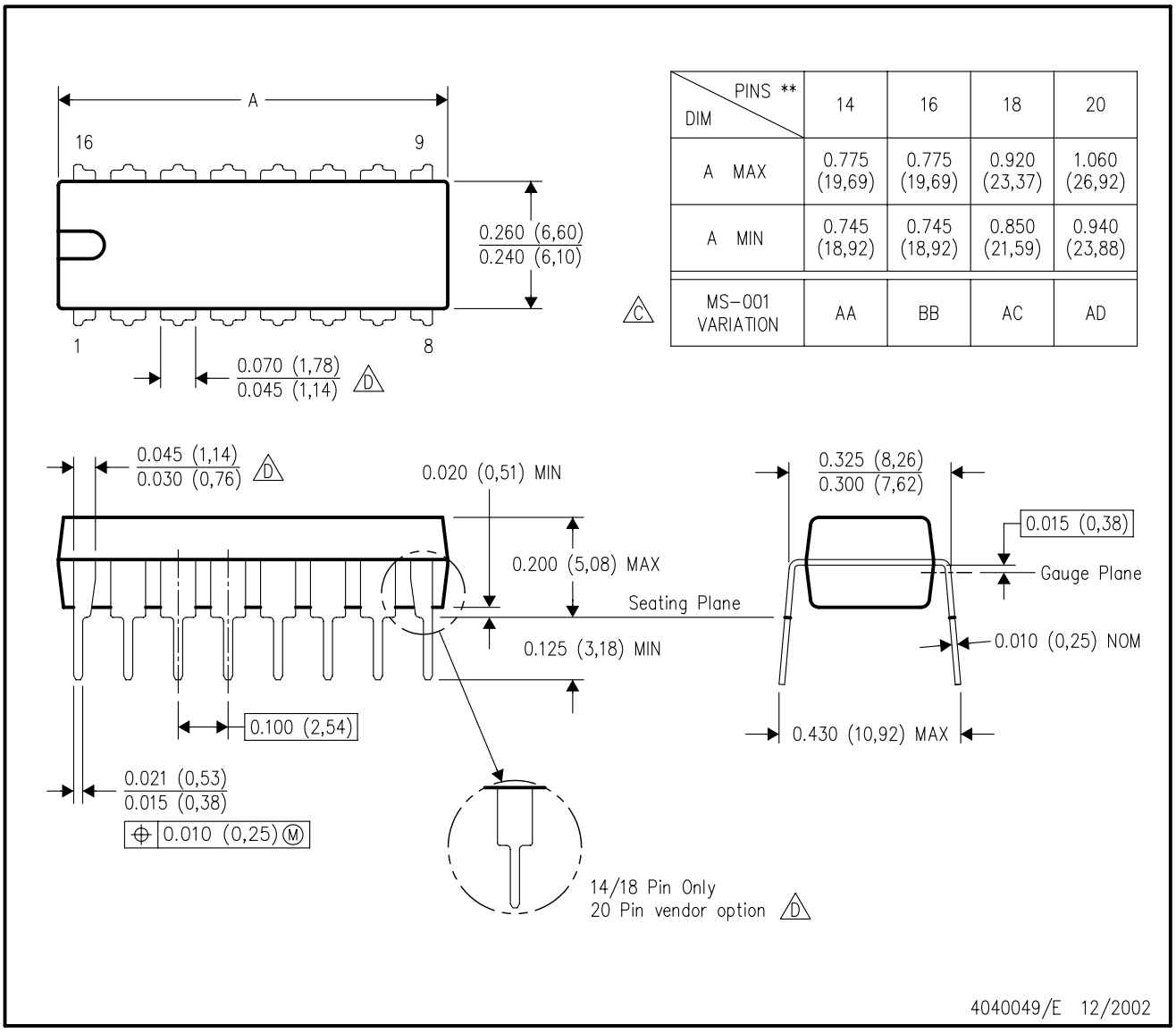


| DIM \ PINS ** | 14 | 16 | 18 | 20 |
|---|---|---|---|---|
| A MAX | 0.775 (19,69) | 0.775 (19,69) | 0.920 (23,37) | 1.060 (26,92) |
| A MIN | 0.745 (18,92) | 0.745 (18,92) | 0.850 (21,59) | 0.940 (23,88) |
| MS–001 VARIATION (C) | AA | BB | AC | AD |

NOTES:
A. All linear dimensions are in inches (millimeters).
B. This drawing is subject to change without notice.
C. Falls within JEDEC MS–001, except 18 and 20 pin minimum body length (Dim A).
D. The 20 pin end lead shoulder width is a vendor option, either half or full width.

D (R–PDSO–G16) PLASTIC SMALL OUTLINE

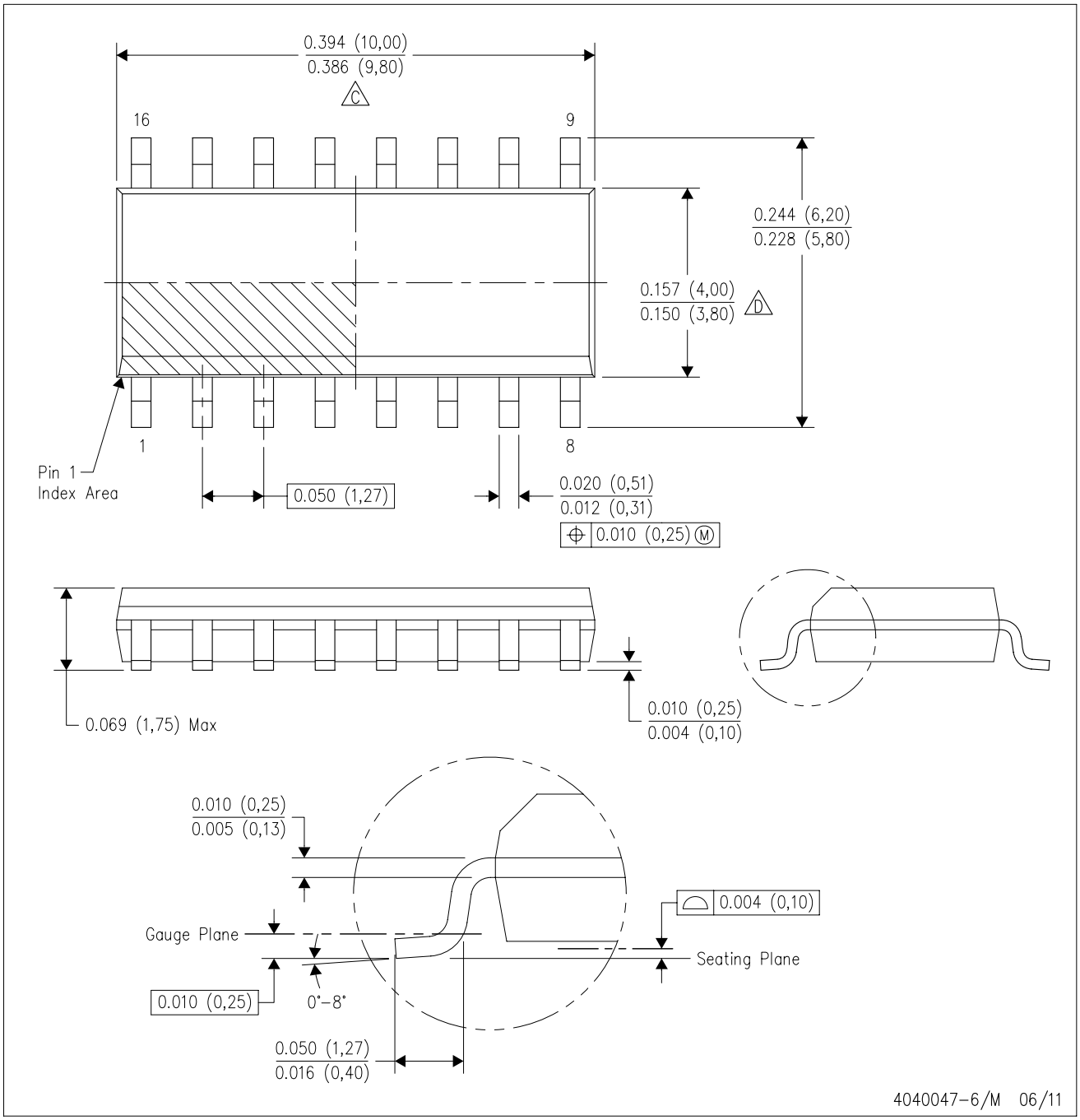


NOTES:
A. All linear dimensions are in inches (millimeters).
B. This drawing is subject to change without notice.
C. Body length does not include mold flash, protrusions, or gate burrs. Mold flash, protrusions, or gate burrs shall not exceed 0.006 (0,15) each side.
D. Body width does not include interlead flash. Interlead flash shall not exceed 0.017 (0,43) each side.
E. Reference JEDEC MS–012 variation AC.

D (R–PDSO–G16) PLASTIC SMALL OUTLINE

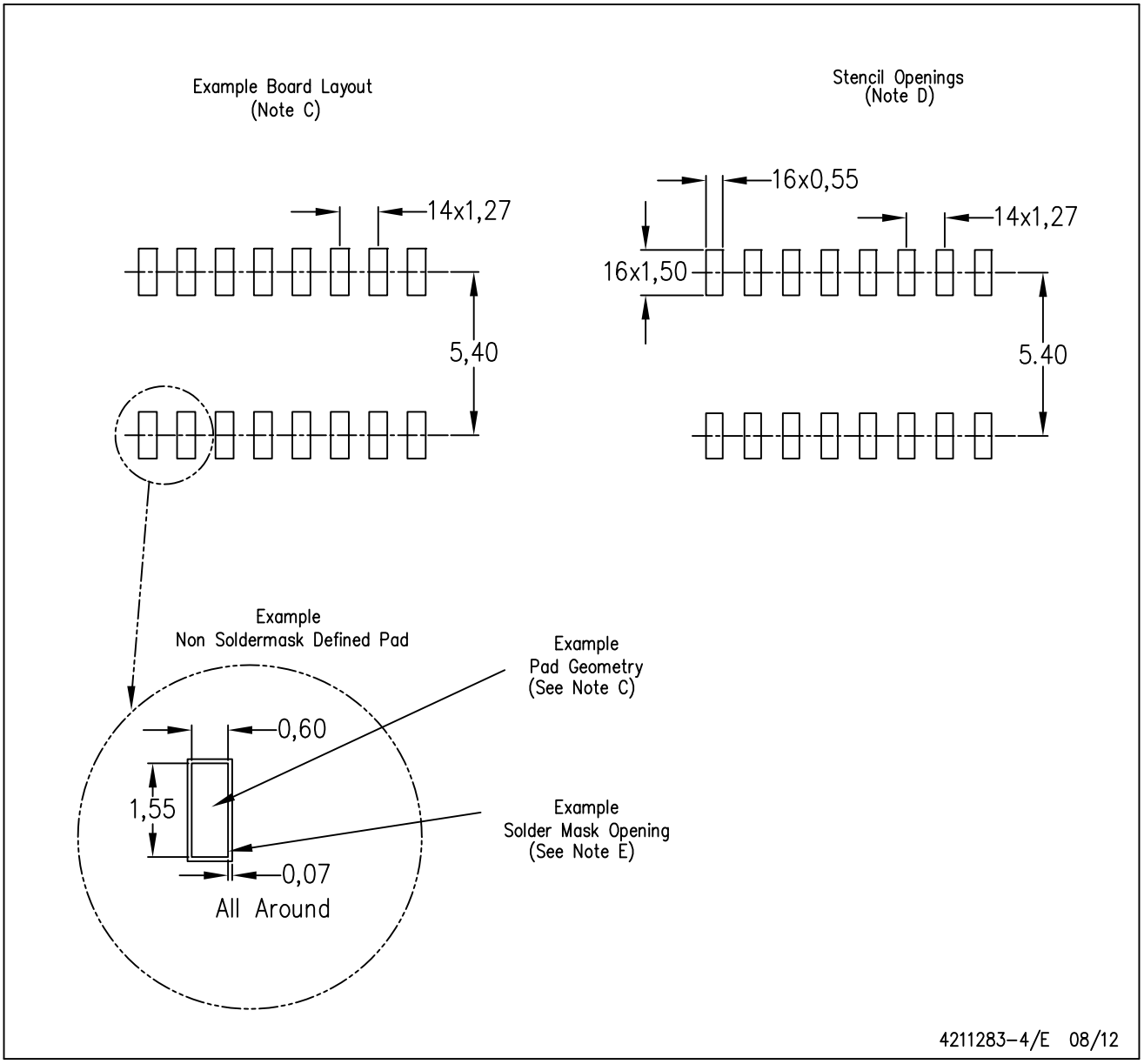


NOTES:
A. All linear dimensions are in millimeters.
B. This drawing is subject to change without notice.
C. Publication IPC–7351 is recommended for alternate designs.
D. Laser cutting apertures with trapezoidal walls and also rounding corners will offer better paste release. Customers should contact their board assembly site for stencil design recommendations. Refer to IPC–7525 for other stencil recommendations.
E. Customers should contact their board fabrication site for solder mask tolerances between and around signal pads.

DW (R–PDSO–G16) PLASTIC SMALL OUTLINE

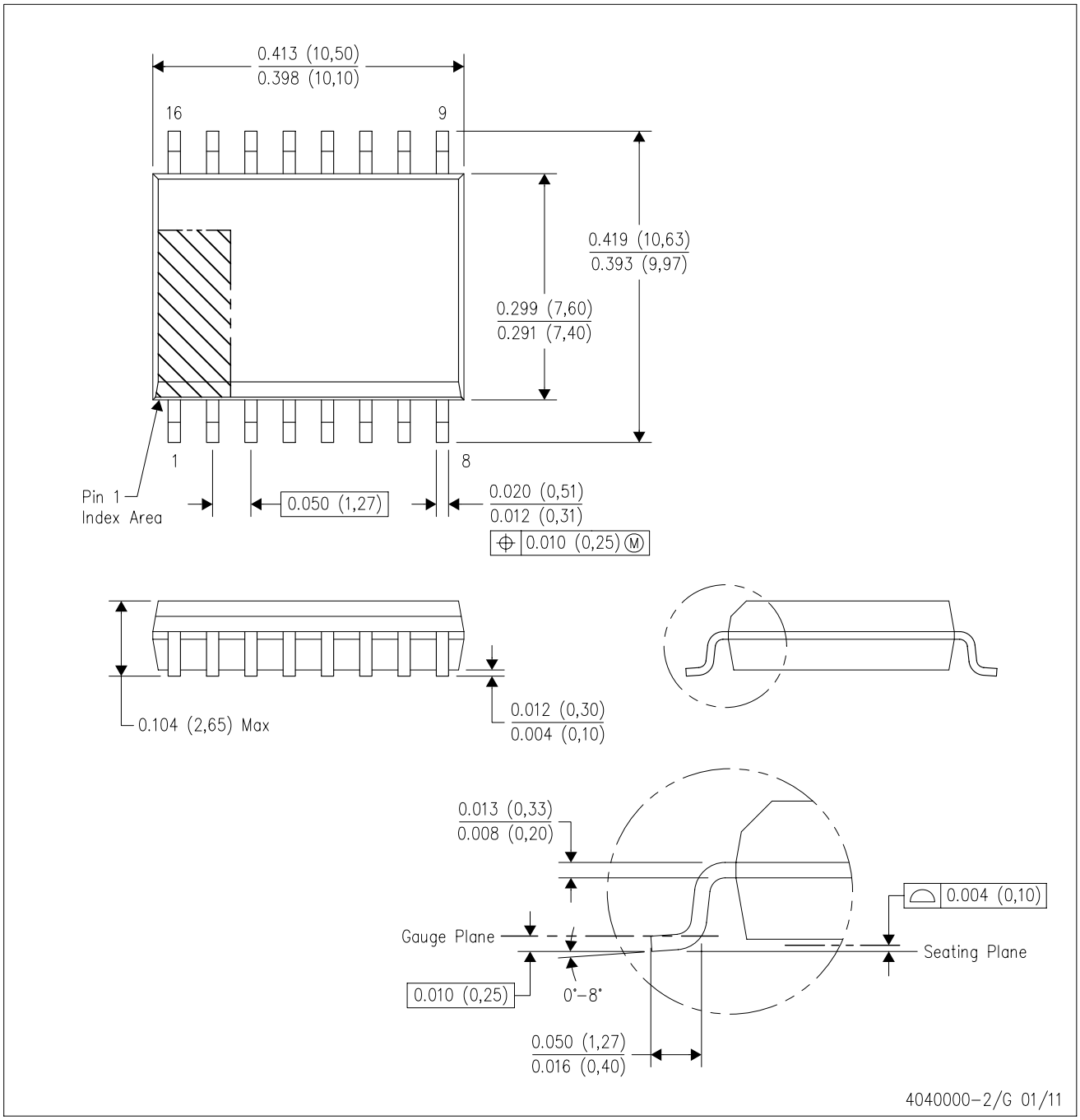


NOTES:
A. All linear dimensions are in inches (millimeters). Dimensioning and tolerancing per ASME Y14.5M–1994.
B. This drawing is subject to change without notice.
C. Body dimensions do not include mold flash or protrusion not to exceed 0.006 (0,15).
D. Falls within JEDEC MS–013 variation AA.

DW (R–PDSO–G16) PLASTIC SMALL OUTLINE

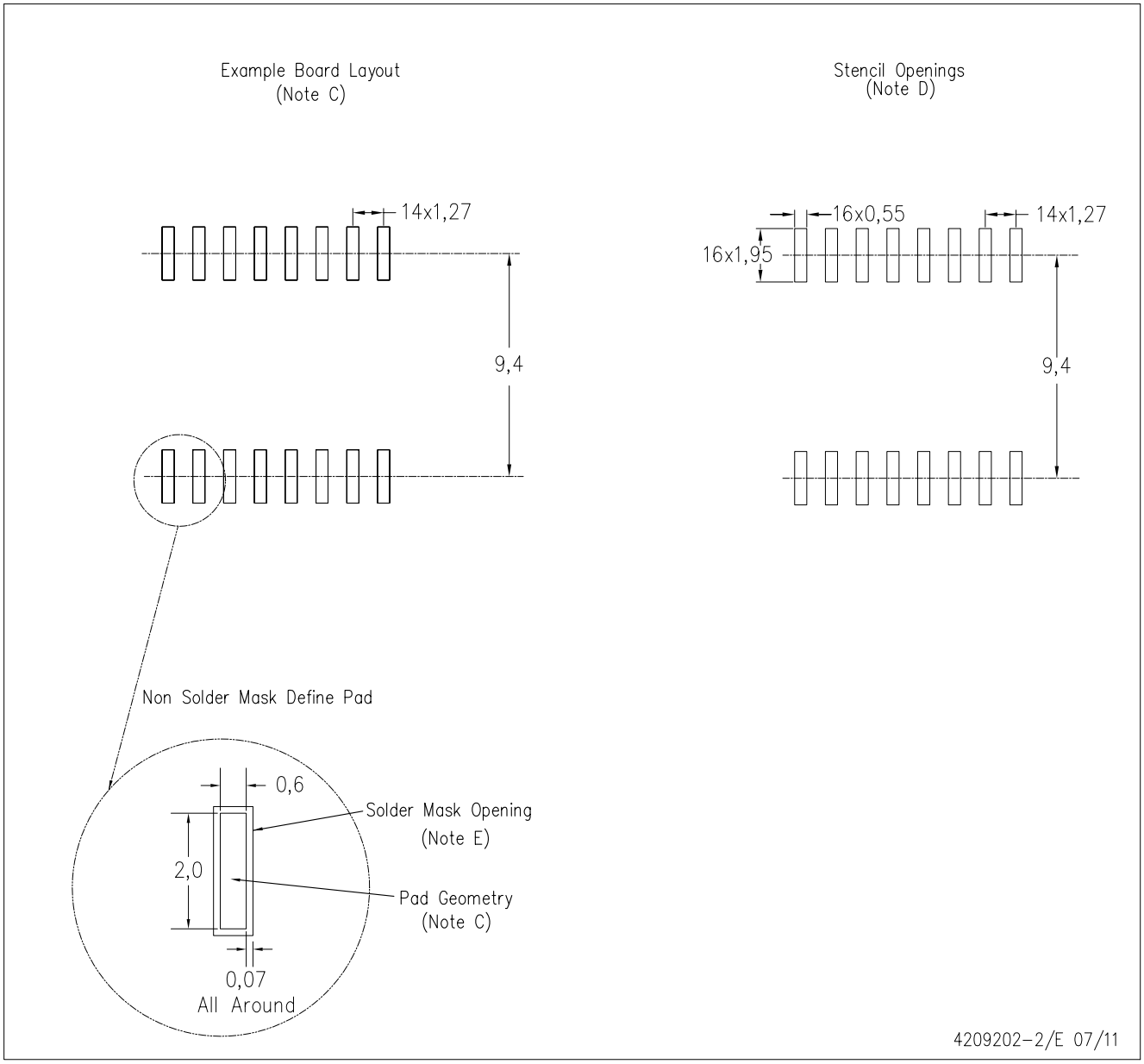


NOTES:
A. All linear dimensions are in millimeters.
B. This drawing is subject to change without notice.
C. Refer to IPC7351 for alternate board design.
D. Laser cutting apertures with trapezoidal walls and also rounding corners will offer better paste release. Customers should contact their board assembly site for stencil design recommendations. Refer to IPC–7525
E. Customers should contact their board fabrication site for solder mask tolerances between and around signal pads.

## MECHANICAL DATA

**NS (R-PDSO-G**)** **PLASTIC SMALL-OUTLINE PACKAGE**

**14-PINS SHOWN**

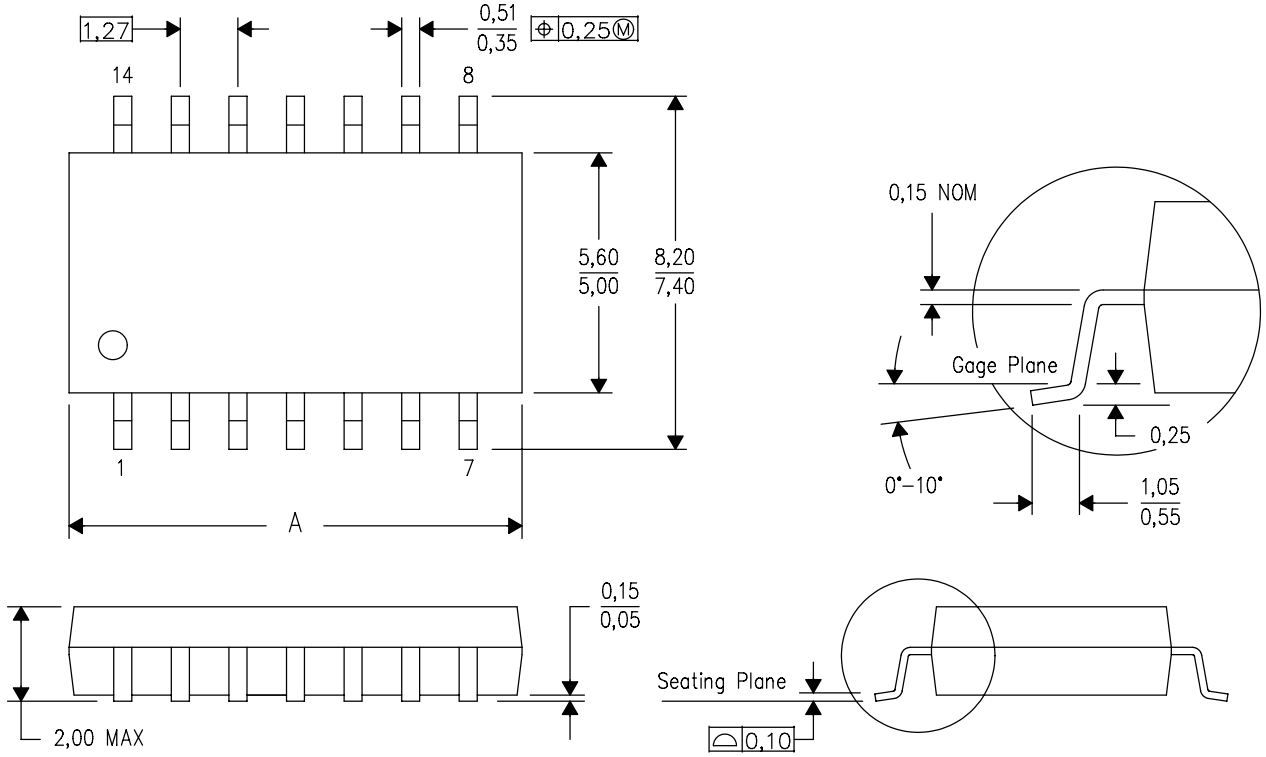


| DIM \ PINS ** | 14 | 16 | 20 | 24 |
|---|---|---|---|---|
| A MAX | 10,50 | 10,50 | 12,90 | 15,30 |
| A MIN | 9,90 | 9,90 | 12,30 | 14,70 |

4040062/C 03/03

NOTES:
A. All linear dimensions are in millimeters.
B. This drawing is subject to change without notice.
C. Body dimensions do not include mold flash or protrusion, not to exceed 0,15.

## IMPORTANT NOTICE

Texas Instruments Incorporated and its subsidiaries (TI) reserve the right to make corrections, enhancements, improvements and other changes to its semiconductor products and services per JESD46, latest issue, and to discontinue any product or service per JESD48, latest issue. Buyers should obtain the latest relevant information before placing orders and should verify that such information is current and complete. All semiconductor products (also referred to herein as “components”) are sold subject to TI’s terms and conditions of sale supplied at the time of order acknowledgment.

TI warrants performance of its components to the specifications applicable at the time of sale, in accordance with the warranty in TI’s terms and conditions of sale of semiconductor products. Testing and other quality control techniques are used to the extent TI deems necessary to support this warranty. Except where mandated by applicable law, testing of all parameters of each component is not necessarily performed.

TI assumes no liability for applications assistance or the design of Buyers’ products. Buyers are responsible for their products and applications using TI components. To minimize the risks associated with Buyers’ products and applications, Buyers should provide adequate design and operating safeguards.

TI does not warrant or represent that any license, either express or implied, is granted under any patent right, copyright, mask work right, or other intellectual property right relating to any combination, machine, or process in which TI components or services are used. Information published by TI regarding third-party products or services does not constitute a license to use such products or services or a warranty or endorsement thereof. Use of such information may require a license from a third party under the patents or other intellectual property of the third party, or a license from TI under the patents or other intellectual property of TI.

Reproduction of significant portions of TI information in TI data books or data sheets is permissible only if reproduction is without alteration and is accompanied by all associated warranties, conditions, limitations, and notices. TI is not responsible or liable for such altered documentation. Information of third parties may be subject to additional restrictions.

Resale of TI components or services with statements different from or beyond the parameters stated by TI for that component or service voids all express and any implied warranties for the associated TI component or service and is an unfair and deceptive business practice. TI is not responsible or liable for any such statements.

Buyer acknowledges and agrees that it is solely responsible for compliance with all legal, regulatory and safety-related requirements concerning its products, and any use of TI components in its applications, notwithstanding any applications-related information or support that may be provided by TI. Buyer represents and agrees that it has all the necessary expertise to create and implement safeguards which anticipate dangerous consequences of failures, monitor failures and their consequences, lessen the likelihood of failures that might cause harm and take appropriate remedial actions. Buyer will fully indemnify TI and its representatives against any damages arising out of the use of any TI components in safety-critical applications.

In some cases, TI components may be promoted specifically to facilitate safety-related applications. With such components, TI’s goal is to help enable customers to design and create their own end-product solutions that meet applicable functional safety standards and requirements. Nonetheless, such components are subject to these terms.

No TI components are authorized for use in FDA Class III (or similar life-critical medical equipment) unless authorized officers of the parties have executed a special agreement specifically governing such use.

Only those TI components which TI has specifically designated as military grade or “enhanced plastic” are designed and intended for use in military/aerospace applications or environments. Buyer acknowledges and agrees that any military or aerospace use of TI components which have ***not*** been so designated is solely at the Buyer's risk, and that Buyer is solely responsible for compliance with all legal and regulatory requirements in connection with such use.

TI has specifically designated certain components as meeting ISO/TS16949 requirements, mainly for automotive use. In any case of use of non-designated products, TI will not be responsible for any failure to meet ISO/TS16949.

| **Products** | | **Applications** | |
|---|---|---|---|
| Audio | www.ti.com/audio | Automotive and Transportation | www.ti.com/automotive |
| Amplifiers | amplifier.ti.com | Communications and Telecom | www.ti.com/communications |
| Data Converters | dataconverter.ti.com | Computers and Peripherals | www.ti.com/computers |
| DLP® Products | www.dlp.com | Consumer Electronics | www.ti.com/consumer-apps |
| DSP | dsp.ti.com | Energy and Lighting | www.ti.com/energy |
| Clocks and Timers | www.ti.com/clocks | Industrial | www.ti.com/industrial |
| Interface | interface.ti.com | Medical | www.ti.com/medical |
| Logic | logic.ti.com | Security | www.ti.com/security |
| Power Mgmt | power.ti.com | Space, Avionics and Defense | www.ti.com/space-avionics-defense |
| Microcontrollers | microcontroller.ti.com | Video and Imaging | www.ti.com/video |
| RFID | www.ti-rfid.com | | |
| OMAP Applications Processors | www.ti.com/omap | **TI E2E Community** | e2e.ti.com |
| Wireless Connectivity | www.ti.com/wirelessconnectivity | | |

Mailing Address: Texas Instruments, Post Office Box 655303, Dallas, Texas 75265
Copyright © 2013, Texas Instruments Incorporated

НИОКР СИСТЕМС

**ООО «НИОКРсистемс» -** это оперативные поставки широкого спектра электронных компонентов отечественного и импортного производства напрямую от производителей и с крупнейших мировых складов. Реализуемая нашей компанией продукция насчитывает более полумиллиона наименований.

Благодаря этому наша компания предлагает к поставке практически не ограниченный ассортимент компонентов как оптовыми, мелкооптовыми партиями, так и в розницу.

Благодаря развитой сети поставщиков, помогаем в поиске и приобретении экзотичных или снятых с производства компонентов.

## Наша компания это:

- Гарантия качества поставляемой продукции
- Широкий ассортимент
- Минимальные сроки поставок
- Техническая поддержка
- Подбор комплектации
- Индивидуальный подход
- Гибкое ценообразование
- Работаем по 275 ФЗ

ООО «НИОКР СИТЕМС»
Москва, 125362, Россия, ул. Вишневая, д. 9, к. 1, Блок 104 а и 104 в

Телефон: 8 (495) 268-14-82
Email: n@nsistems.ru

ИНН: 7735154786
ОГРН: 1167746717709