Hyperfast Rectifier, 2 x 10 A FRED Pt®

TO-220AB

TO-220 FULL-PAK

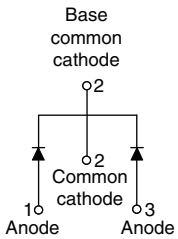

VS-20CTH03PbF
VS-20CTH03-N3

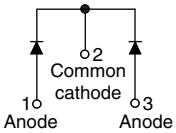

VS-20CTH03FPPbF
VS-20CTH03FP-N3

FEATURES

- Hyperfast recovery time
- Low forward voltage drop
- 175 °C operating junction temperature
- Low leakage current
- Fully isolated package (V_{INS} = 2500 V_{RMS})
- UL E78996 pending
- Designed and qualified according to JEDEC-JESD47
- Material categorization: For definitions of compliance please see www.vishay.com/doc?99912

Pb-free
e3
RoHS COMPLIANT
HALOGEN FREE Available

DESCRIPTION/APPLICATIONS

300 V series are the state of the art hyperfast recovery rectifiers designed with optimized performance of forward voltage drop and hyperfast recovery time.

The planar structure and the platinum doped life time control, guarantee the best overall performance, ruggedness and reliability characteristics.

These devices are intended for use in the output rectification stage of SMPS, UPS, DC/DC converters as well as freewheeling diodes in low voltage inverters and chopper motor drives.

Their extremely optimized stored charge and low recovery current minimize the switching losses and reduce over dissipation in the switching element and snubbers.

PRODUCT SUMMARY	
Package	TO-220AB, TO-220FP
$I_{F(AV)}$	2 x 10 A
V_R	300 V
V_F at I_F	1.25 V
t_{rr} typ.	See Recovery table
T_J max.	175 °C
Diode variation	Common cathode

ABSOLUTE MAXIMUM RATINGS

PARAMETER		SYMBOL	TEST CONDITIONS	VALUES	UNITS
Peak repetitive reverse voltage		V_{RRM}		300	V
Average rectified forward current	per diode	$I_{F(AV)}$	T_C = 160 °C	10	A
	(FULL-PAK) per diode		T_C = 135 °C		
	per device			20	
Non-repetitive peak surge current		I_{FSM}	T_J = 25 °C	120	
Operating junction and storage temperatures		T_J, T_{Stg}		- 65 to 175	°C

ELECTRICAL SPECIFICATIONS (T_J = 25 °C unless otherwise specified)

PARAMETER	SYMBOL	TEST CONDITIONS	MIN.	TYP.	MAX.	UNITS
Breakdown voltage, blocking voltage	V_{BR}, V_R	I_R = 100 µA	300	-	-	V
Forward voltage	V_F	I_F = 10 A	-	1.05	1.25	
		I_F = 10 A, T_J = 125 °C	-	0.85	0.95	
Reverse leakage current	I_R	V_R = V_R rated	-	-	20	µA
		T_J = 125 °C, V_R = V_R rated	-	6	200	
Junction capacitance	C_T	V_R = 300 V	-	30	-	pF
Series inductance	L_S	Measured lead to lead 5 mm from package body	-	8	-	nH

For technical questions within your region: DiodesAmericas@vishay.com, DiodesAsia@vishay.com, DiodesEurope@vishay.com
THIS DOCUMENT IS SUBJECT TO CHANGE WITHOUT NOTICE. THE PRODUCTS DESCRIBED HEREIN AND THIS DOCUMENT ARE SUBJECT TO SPECIFIC DISCLAIMERS, SET FORTH AT www.vishay.com/doc?91000

DYNAMIC RECOVERY CHARACTERISTICS (T_C = 25 °C unless otherwise specified)							
PARAMETER	**SYMBOL**	**TEST CONDITIONS**		**MIN.**	**TYP.**	**MAX.**	**UNITS**
Reverse recovery time	t_{rr}	I_F = 1 A, dI_F/dt = 50 A/μs, V_R = 30 V		-	-	35	ns
		I_F = 1 A, dI_F/dt = 100 A/μs, V_R = 30 V		-	-	30	
		T_J = 25 °C	I_F = 10 A dI_F/dt = 200 A/μs V_R = 200 V	-	31	-	
		T_J = 125 °C		-	42	-	
Peak recovery current	I_{RRM}	T_J = 25 °C		-	2.4	-	A
		T_J = 125 °C		-	5.6	-	
Reverse recovery charge	Q_{rr}	T_J = 25 °C		-	36	-	nC
		T_J = 125 °C		-	120	-	

THERMAL - MECHANICAL SPECIFICATIONS							
PARAMETER		**SYMBOL**	**TEST CONDTIONS**	**MIN.**	**TYP.**	**MAX.**	**UNITS**
Maximum junction and storage temperature range		T_J, T_{Stg}		- 65	-	175	°C
Thermal resistance, junction to case	per diode	R_{thJC}	Mounting surface, flat, smooth and greased	-	-	1.5	°C/W
	(FULL-PAK) per diode			-	-	3.9	
Marking device			Case style TO-220AB	20CTH03			
			Case style TO-220 FULL-PAK	20CTH03FP			

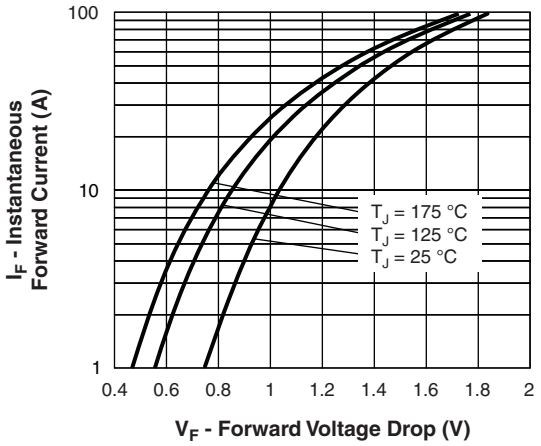

Fig. 1 - Typical Forward Voltage Drop Characteristics

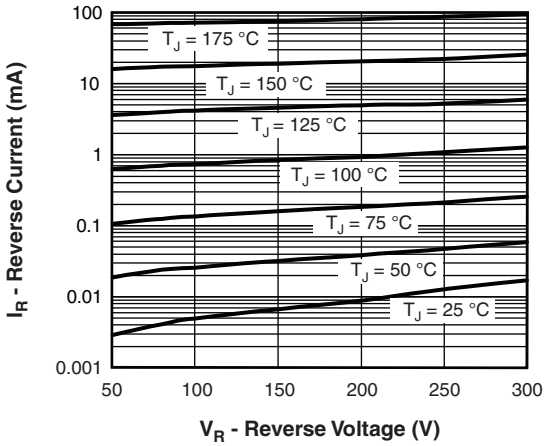

Fig. 2 - Typical Values of Reverse Current vs. Reverse Voltage

For technical questions within your region: DiodesAmericas@vishay.com, DiodesAsia@vishay.com, DiodesEurope@vishay.com
THIS DOCUMENT IS SUBJECT TO CHANGE WITHOUT NOTICE. THE PRODUCTS DESCRIBED HEREIN AND THIS DOCUMENT ARE SUBJECT TO SPECIFIC DISCLAIMERS, SET FORTH AT www.vishay.com/doc?91000

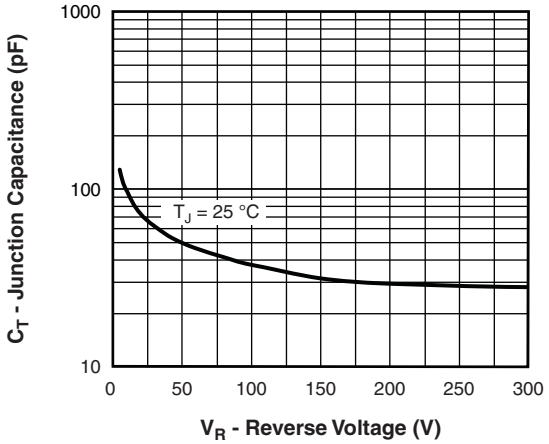

Fig. 3 - Typical Junction Capacitance vs. Reverse Voltage

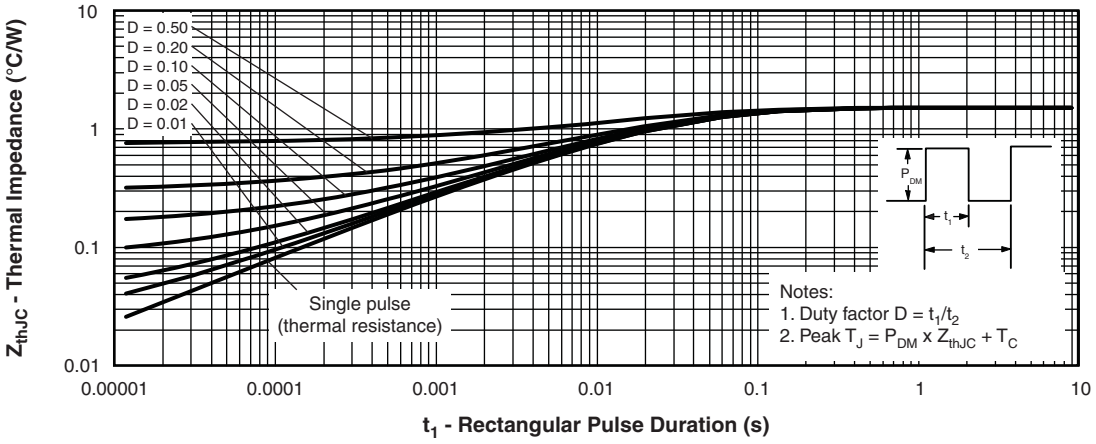

Fig. 4 - Maximum Thermal Impedance Z_{thJC} Characteristics

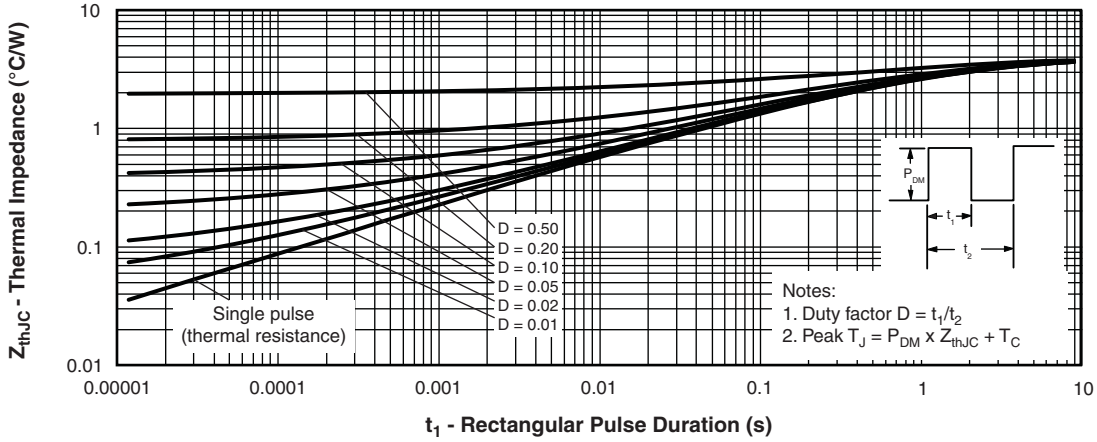

Fig. 5 - Maximum Thermal Impedance Z_{thJC} Characteristics (FULL-PAK)

For technical questions within your region: DiodesAmericas@vishay.com, DiodesAsia@vishay.com, DiodesEurope@vishay.com
THIS DOCUMENT IS SUBJECT TO CHANGE WITHOUT NOTICE. THE PRODUCTS DESCRIBED HEREIN AND THIS DOCUMENT ARE SUBJECT TO SPECIFIC DISCLAIMERS, SET FORTH AT www.vishay.com/doc?91000

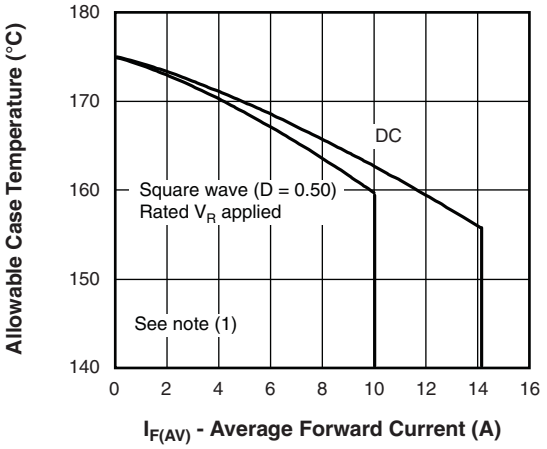

Fig. 6 - Maximum Allowable Case Temperature vs. Average Forward Current

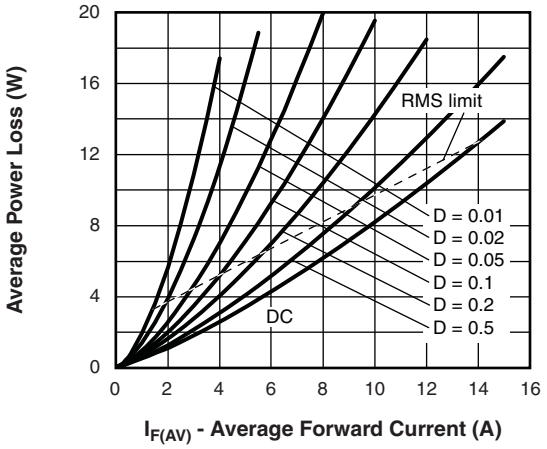

Fig. 8 - Forward Power Loss Characteristics

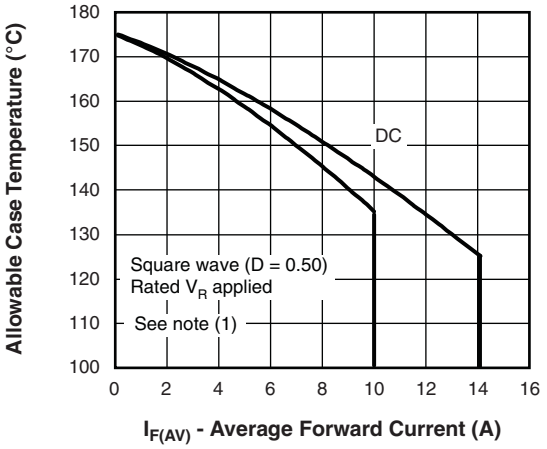

Fig. 7 - Maximum Allowable Case Temperature vs. Average Forward Current (FULL-PAK)

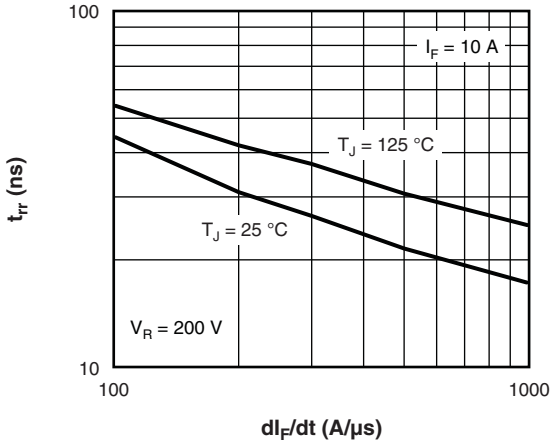

Fig. 9 - Typical Reverse Recovery Time vs. dI_F/dt

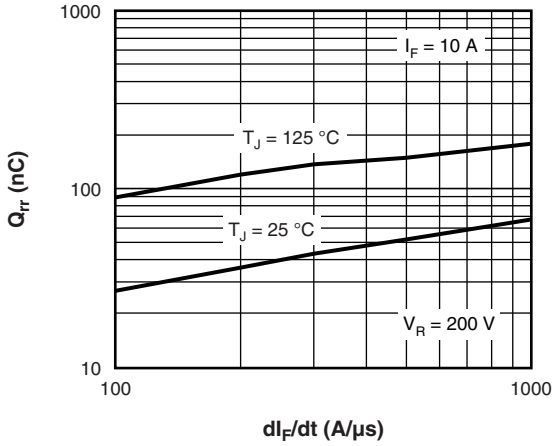

Fig. 10 - Typical Stored Charge vs. dI_F/dt

Note

(1) Formula used: $T_C = T_J - (Pd + Pd_{REV}) \times R_{thJC}$;
Pd = Forward power loss = $I_{F(AV)} \times V_{FM}$ at $(I_{F(AV)}/D)$ (see fig. 8);
Pd_{REV} = Inverse power loss = $V_{R1} \times I_R (1 - D)$; I_R at V_{R1} = Rated V_R

For technical questions within your region: DiodesAmericas@vishay.com, DiodesAsia@vishay.com, DiodesEurope@vishay.com
THIS DOCUMENT IS SUBJECT TO CHANGE WITHOUT NOTICE. THE PRODUCTS DESCRIBED HEREIN AND THIS DOCUMENT ARE SUBJECT TO SPECIFIC DISCLAIMERS, SET FORTH AT www.vishay.com/doc?91000

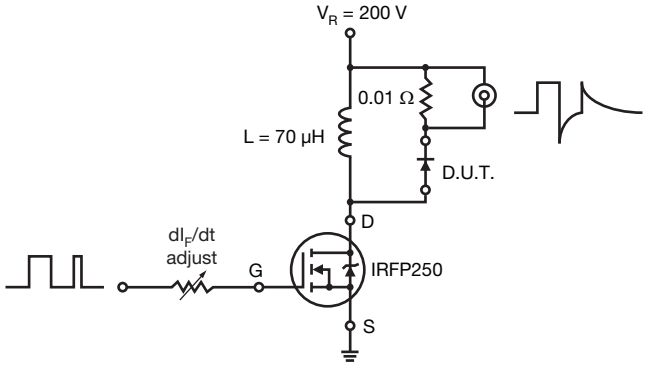

Fig. 11 - Reverse Recovery Parameter Test Circuit

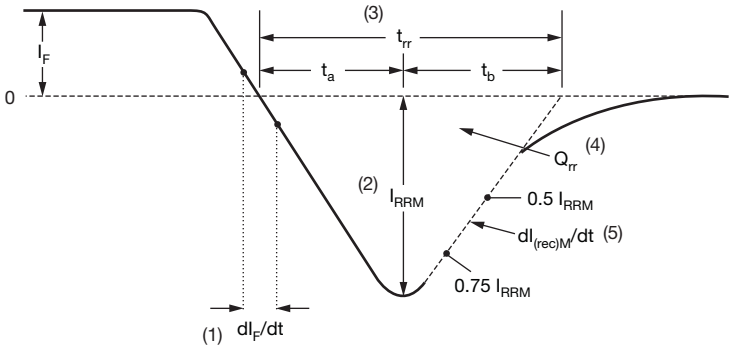

(1) dI_F/dt - rate of change of current through zero crossing

(2) I_{RRM} - peak reverse recovery current

(3) t_{rr} - reverse recovery time measured from zero crossing point of negative going I_F to point where a line passing through 0.75 I_{RRM} and 0.50 I_{RRM} extrapolated to zero current.

(4) Q_{rr} - area under curve defined by t_{rr} and I_{RRM}

$$Q_{rr} = \frac{t_{rr} \times I_{RRM}}{2}$$

(5) $dI_{(rec)M}/dt$ - peak rate of change of current during t_b portion of t_{rr}

Fig. 12 - Reverse Recovery Waveform and Definitions

For technical questions within your region: DiodesAmericas@vishay.com, DiodesAsia@vishay.com, DiodesEurope@vishay.com
THIS DOCUMENT IS SUBJECT TO CHANGE WITHOUT NOTICE. THE PRODUCTS DESCRIBED HEREIN AND THIS DOCUMENT ARE SUBJECT TO SPECIFIC DISCLAIMERS, SET FORTH AT www.vishay.com/doc?91000

ORDERING INFORMATION TABLE

Device code	VS-	20	C	T	H	03	FP	PbF
	1	2	3	4	5	6	7	8

1 - Vishay Semiconductors product
2 - Current rating (20 = 20 A)
3 - C = Common cathode
4 - T = TO-220, D^2PAK
5 - H = Hyperfast recovery
6 - Voltage rating (03 = 300 V)
7 - • None = TO-220AB
• FP = TO-220 FULL-PAK
8 - Environmental digit:
PbF = Lead (Pb)-free and RoHS compliant
-N3 = Halogen-free, RoHS compliant and totally lead (Pb)-free

ORDERING INFORMATION (Example)

PREFERRED P/N	QUANTITY PER T/R	MINIMUM ORDER QUANTITY	PACKAGING DESCRIPTION
VS-20CTH03PbF	50	1000	Antistatic plastic tube
VS-20CTH03-N3	50	1000	Antistatic plastic tube
VS-20CTH03FPPbF	50	1000	Antistatic plastic tube
VS-20CTH03FP-N3	50	1000	Antistatic plastic tube

LINKS TO RELATED DOCUMENTS

Dimensions	TO-220AB	www.vishay.com/doc?95222
	TO-220FP	www.vishay.com/doc?95072
Part marking information	TO-220ABPbF	www.vishay.com/doc?95225
	TO-220AB-N3	www.vishay.com/doc?95028
	TO-220FPPbF	www.vishay.com/doc?95069
	TO-220FP-N3	www.vishay.com/doc?95456

For technical questions within your region: DiodesAmericas@vishay.com, DiodesAsia@vishay.com, DiodesEurope@vishay.com
THIS DOCUMENT IS SUBJECT TO CHANGE WITHOUT NOTICE. THE PRODUCTS DESCRIBED HEREIN AND THIS DOCUMENT ARE SUBJECT TO SPECIFIC DISCLAIMERS, SET FORTH AT www.vishay.com/doc?91000

DIMENSIONS in millimeters

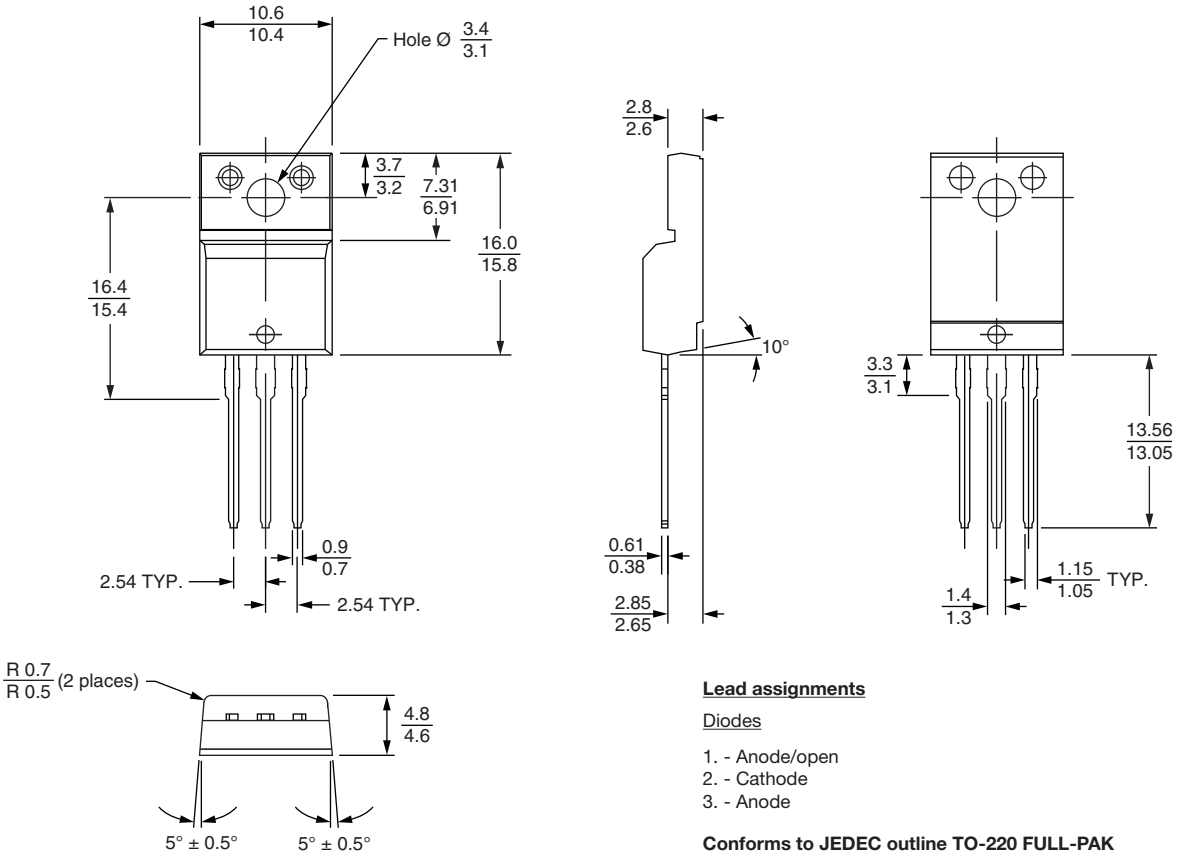

Lead assignments

Diodes

1. - Anode/open
2. - Cathode
3. - Anode

Conforms to JEDEC outline TO-220 FULL-PAK

For technical questions within your region: DiodesAmericas@vishay.com, DiodesAsia@vishay.com, DiodesEurope@vishay.com

THIS DOCUMENT IS SUBJECT TO CHANGE WITHOUT NOTICE. THE PRODUCTS DESCRIBED HEREIN AND THIS DOCUMENT ARE SUBJECT TO SPECIFIC DISCLAIMERS, SET FORTH AT www.vishay.com/doc?91000

TO-220AB

DIMENSIONS in millimeters and inches

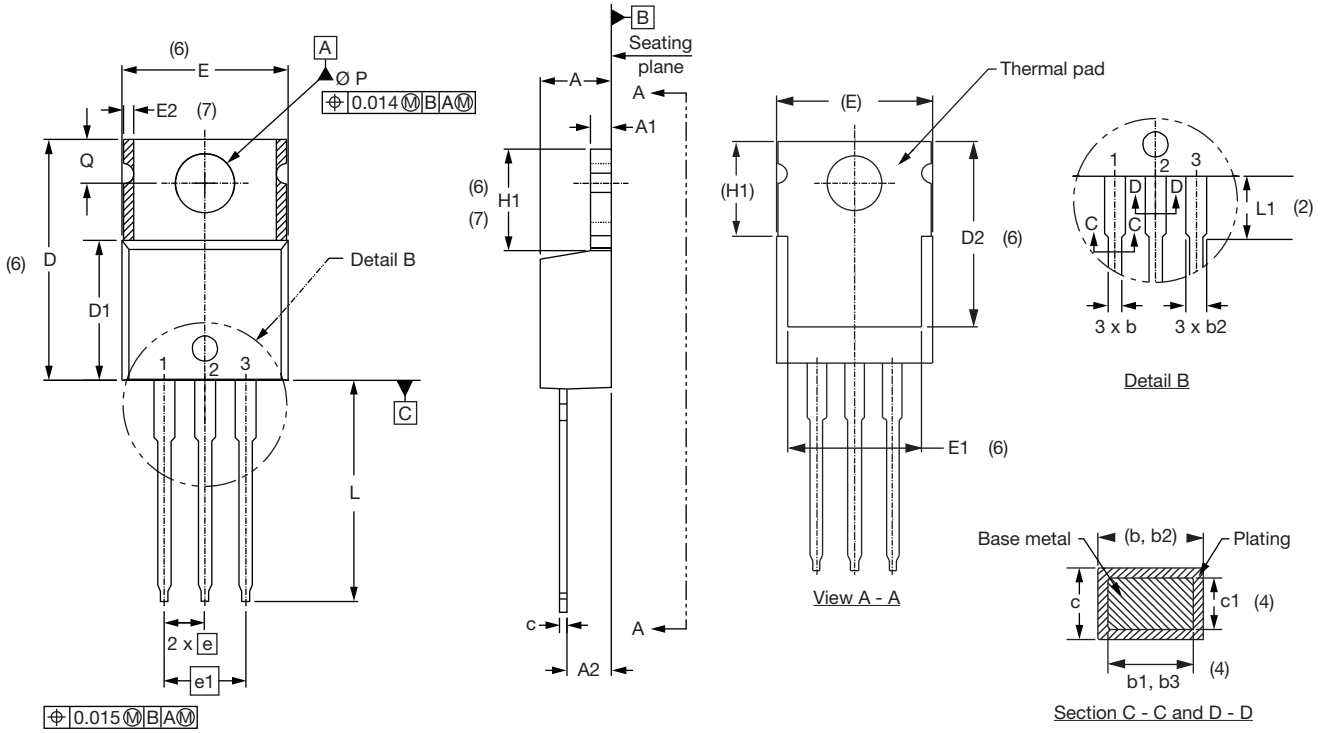

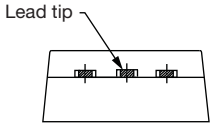

Lead assignments

Diodes

1. - Anode/open
2. - Cathode
3. - Anode

Conforms to JEDEC outline TO-220AB

SYMBOL	MILLIMETERS		INCHES		NOTES
	MIN.	MAX.	MIN.	MAX.	
A	4.25	4.65	0.167	0.183	
A1	1.14	1.40	0.045	0.055	
A2	2.56	2.92	0.101	0.115	
b	0.69	1.01	0.027	0.040	
b1	0.38	0.97	0.015	0.038	4
b2	1.20	1.73	0.047	0.068	
b3	1.14	1.73	0.045	0.068	4
c	0.36	0.61	0.014	0.024	
c1	0.36	0.56	0.014	0.022	4
D	14.85	15.25	0.585	0.600	3
D1	8.38	9.02	0.330	0.355	
D2	11.68	12.88	0.460	0.507	6

SYMBOL	MILLIMETERS		INCHES		NOTES
	MIN.	MAX.	MIN.	MAX.	
E	10.11	10.51	0.398	0.414	3, 6
E1	6.86	8.89	0.270	0.350	6
E2	-	0.76	-	0.030	7
e	2.41	2.67	0.095	0.105	
e1	4.88	5.28	0.192	0.208	
H1	6.09	6.48	0.240	0.255	6, 7
L	13.52	14.02	0.532	0.552	
L1	3.32	3.82	0.131	0.150	2
Ø P	3.54	3.73	0.139	0.147	
Q	2.60	3.00	0.102	0.118	
θ	90° to 93°		90° to 93°		

Notes

(1) Dimensioning and tolerancing as per ASME Y14.5M-1994
(2) Lead dimension and finish uncontrolled in L1
(3) Dimension D, D1 and E do not include mold flash. Mold flash shall not exceed 0.127 mm (0.005") per side. These dimensions are measured at the outermost extremes of the plastic body
(4) Dimension b1, b3 and c1 apply to base metal only
(5) Controlling dimensions: inches
(6) Thermal pad contour optional within dimensions E, H1, D2 and E1
(7) Dimensions E2 x H1 define a zone where stamping and singulation irregularities are allowed
(8) Outline conforms to JEDEC TO-220, except A2 (maximum) and D2 (minimum) where dimensions are derived from the actual package outline

Disclaimer

ALL PRODUCT, PRODUCT SPECIFICATIONS AND DATA ARE SUBJECT TO CHANGE WITHOUT NOTICE TO IMPROVE RELIABILITY, FUNCTION OR DESIGN OR OTHERWISE.

Vishay Intertechnology, Inc., its affiliates, agents, and employees, and all persons acting on its or their behalf (collectively, "Vishay"), disclaim any and all liability for any errors, inaccuracies or incompleteness contained in any datasheet or in any other disclosure relating to any product.

Vishay makes no warranty, representation or guarantee regarding the suitability of the products for any particular purpose or the continuing production of any product. To the maximum extent permitted by applicable law, Vishay disclaims (i) any and all liability arising out of the application or use of any product, (ii) any and all liability, including without limitation special, consequential or incidental damages, and (iii) any and all implied warranties, including warranties of fitness for particular purpose, non-infringement and merchantability.

Statements regarding the suitability of products for certain types of applications are based on Vishay's knowledge of typical requirements that are often placed on Vishay products in generic applications. Such statements are not binding statements about the suitability of products for a particular application. It is the customer's responsibility to validate that a particular product with the properties described in the product specification is suitable for use in a particular application. Parameters provided in datasheets and/or specifications may vary in different applications and performance may vary over time. All operating parameters, including typical parameters, must be validated for each customer application by the customer's technical experts. Product specifications do not expand or otherwise modify Vishay's terms and conditions of purchase, including but not limited to the warranty expressed therein.

Except as expressly indicated in writing, Vishay products are not designed for use in medical, life-saving, or life-sustaining applications or for any other application in which the failure of the Vishay product could result in personal injury or death. Customers using or selling Vishay products not expressly indicated for use in such applications do so at their own risk and agree to fully indemnify and hold Vishay and its distributors harmless from and against any and all claims, liabilities, expenses and damages arising or resulting in connection with such use or sale, including attorneys fees, even if such claim alleges that Vishay or its distributor was negligent regarding the design or manufacture of the part. Please contact authorized Vishay personnel to obtain written terms and conditions regarding products designed for such applications.

No license, express or implied, by estoppel or otherwise, to any intellectual property rights is granted by this document or by any conduct of Vishay. Product names and markings noted herein may be trademarks of their respective owners.

Material Category Policy

Vishay Intertechnology, Inc. hereby certifies that all its products that are identified as RoHS-Compliant fulfill the definitions and restrictions defined under Directive 2011/65/EU of The European Parliament and of the Council of June 8, 2011 on the restriction of the use of certain hazardous substances in electrical and electronic equipment (EEE) - recast, unless otherwise specified as non-compliant.

Please note that some Vishay documentation may still make reference to RoHS Directive 2002/95/EC. We confirm that all the products identified as being compliant to Directive 2002/95/EC conform to Directive 2011/65/EU.

НИОКР СИСТЕМС

ООО «НИОКРсистемс» - это оперативные поставки широкого спектра электронных компонентов отечественного и импортного производства напрямую от производителей и с крупнейших мировых складов. Реализуемая нашей компанией продукция насчитывает более полумиллиона наименований.

Благодаря этому наша компания предлагает к поставке практически не ограниченный ассортимент компонентов как оптовыми, мелкооптовыми партиями, так и в розницу.

Благодаря развитой сети поставщиков, помогаем в поиске и приобретении экзотичных или снятых с производства компонентов.

Наша компания это:

- Гарантия качества поставляемой продукции
- Широкий ассортимент
- Минимальные сроки поставок
- Техническая поддержка
- Подбор комплектации
- Индивидуальный подход
- Гибкое ценообразование
- Работаем по 275 ФЗ

ООО «НИОКР СИТЕМС»
Москва, 125362, Россия, ул. Вишневая, д. 9, к. 1, Блок 104 а и 104 в

Телефон: 8 (495) 268-14-82
Email: n@nsistems.ru

ИНН: 7735154786
ОГРН: 1167746717709