GM7230

150KHz, 3A STEP DOWN VOLTAGE SWITCHING REGULATORS

Description

GM7230 series is designed to provide all the active function for a step-down (buck) switching regulator, and drives a maximum load current as high as 3A line and load regulations. GM7230 is available in fixed output voltages of 3.3V, 5V, and a versatile Adjustable output version.

These regulators are simple to use and require minimum number of external components. The features include internal frequency compensation and a fixed-frequency oscillator.

The GM7230 is high-efficiency replacements for popular three-terminal linear regulators, and is requiring a smaller heat sink or even no need heat sink.

GM7230 performs well with standard inductors from most of manufacturers, and simplifying the design of switch-mode power supplies. External shutdown is included with 80 µA (typical) standby current. The output switch has cycle-by-cycle current limiting as well as thermal shutdown for full protection under fault conditions.

GM7230 operates at a switching frequency of 150 kHz which allowing smaller size filter components than what would be needed with lower frequency switching regulators.

GM7230 series are available in a standard 5-lead TO-220, TO220B and TO263 packages.

Features

- **3.3V, 5V, 12Vand Adjustable output versions**
- **Adjustable version output voltage range 1.23V to 37V**
- **V_{OUT} accuracy is to ±2% under specified input voltage the output load conditions**
- **Input voltage range up to 40V**
- **Requires only 4 external components with High efficiency**
- **TTL shutdown capability, low power standby mode**
- **Built-in thermal shutdown, current limit protection**
- **Uses standard inductors**
- **150 kHz fixed frequency internal oscillator**

Application

Pre-regulator for linear regulators

High-efficiency step-down buck regulator

On-card/board switching regulators

Positive to negative converter (buck-boost)

LCD Monitors

Typical Application Circuits

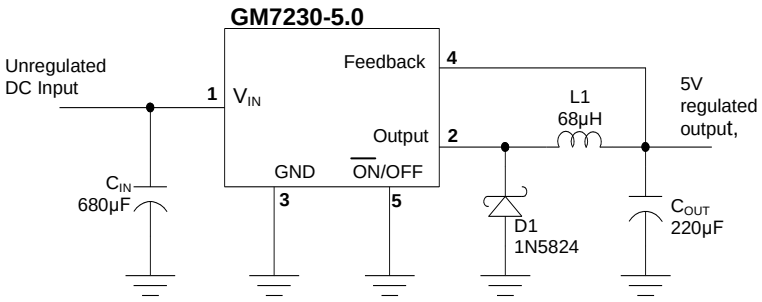

Marking Information and Pin Configurations (Top View)

TO-220-5

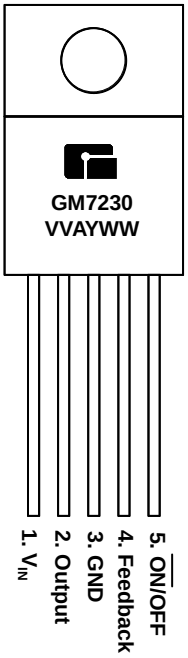

TO-220B-5

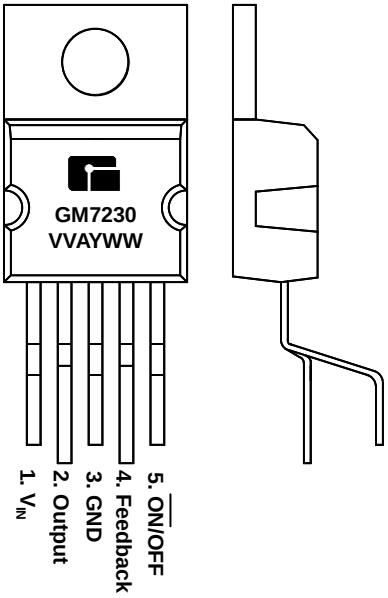

TO-263-5

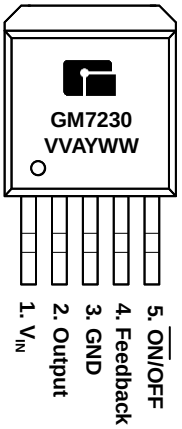

G: Green Product
VV: Voltage suffix (15 = 1.5V, 50 = 5.0V…A = Adj)
A: Assembly / Test site code
Y: Year
WW: Week

Marking Information and Pin Configurations – Green Products (Top View)

TO-220-5

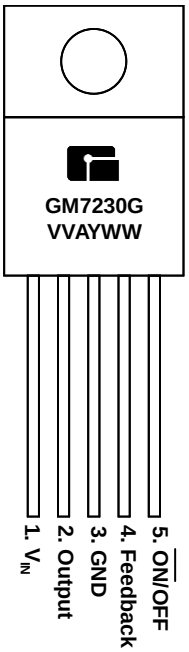

TO-220B-5

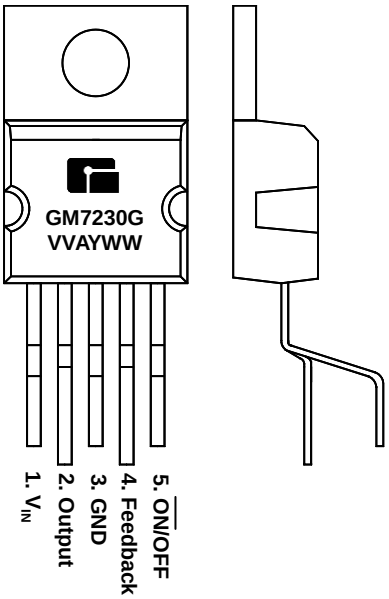

TO-263-5

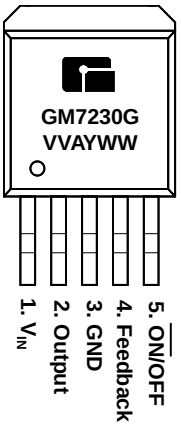

G: Green Product
VV: Voltage suffix (15 = 1.5V, 50 = 5.0V…A = Adj)
A: Assembly / Test site code
Y: Year
WW: Week

Ordering Information – Pb Free Products

Ordering Number	Output Voltage	Package	Shipping
GM7230-ATA5T	Adj	TO-263-5	50 Units / Tube
GM7230-ATA5R		TO-263-5	800 Units / Reel
GM7230-ATB5T		TO-220-5	50 Units / Tube
GM7230-ATB5BT		TO-220-5B	50 Units / Tube
GM7230-3.3TA5T	3.3	TO-263-5	50 Units / Tube
GM7230-3.3TA5R		TO-263-5	800 Units / Reel
GM7230-3.3TB5T		TO-220-5	50 Units / Tube
GM7230-3.3TB5BT		TO-220-5B	50 Units / Tube
GM7230-5.0TA5T	5.0	TO-263-5	50 Units / Tube
GM7230-5.0TA5R		TO-263-5	800 Units / Reel
GM7230-5.0TB5T		TO-220-5	50 Units / Tube
GM7230-12TB5BT		TO-220-5B	50 Units / Tube
GM7230-12TA5T	12	TO-263-5	50 Units / Tube
GM7230-12TA5R		TO-263-5	800 Units / Reel
GM7230-12TB5T		TO-220-5	50 Units / Tube
GM7230-12TB5BT		TO-220-5B	50 Units / Tube

Ordering Information – Green Products

Ordering Number	Output Voltage	Package	Shipping
GM7230-ATA5TG	Adj	TO-263-5	50 Units / Tube
GM7230-ATA5RG		TO-263-5	800 Units / Reel
GM7230-ATB5TG		TO-220-5	50 Units / Tube
GM7230-ATB5BTG		TO-220-5B	50 Units / Tube
GM7230-3.3TA5TG	3.3	TO-263-5	50 Units / Tube
GM7230-3.3TA5RG		TO-263-5	800 Units / Reel
GM7230-3.3TB5TG		TO-220-5	50 Units / Tube
GM7230-3.3TB5BTG		TO-220-5B	50 Units / Tube
GM7230-5.0TA5TG	5.0	TO-263-5	50 Units / Tube
GM7230-5.0TA5RG		TO-263-5	800 Units / Reel
GM7230-5.0TB5TG		TO-220-5	50 Units / Tube
GM7230-12TB5BTG		TO-220-5B	50 Units / Tube
GM7230-12TA5TG	12	TO-263-5	50 Units / Tube
GM7230-12TA5RG		TO-263-5	800 Units / Reel
GM7230-12TB5TG		TO-220-5	50 Units / Tube
GM7230-12TB5BTG		TO-220-5B	50 Units / Tube

Absolute Maximum Ratings (Note 1)

Rating	Value	Unit
Maximum Supply Voltage	45	V
SD Pin Input Voltage / Feed Back Pin Voltage	-0.3 + V_{IN} + 0.3	V
Output Voltage to Ground (Steady State)	-0.3 + V_{IN} + 0.3	V
Power Dissipation	Internally Limited	-
Thermal Resistance – Junction to Ambient (θ_{JA}) ** 2 square inch of FR-4, double sided, 1oz. minimum copper weight, is recommended	36	℃/W
Storage Temperature Range	- 65 to 150	℃
Maximum Junction Temperature	+ 150	℃
Operating Temperature Range	- 40 to 125	℃
Minimum EDS Rating (Note 2)	2	kV
Lead Temperature (Soldering, 10 sec)	+ 260	℃

Block Diagram

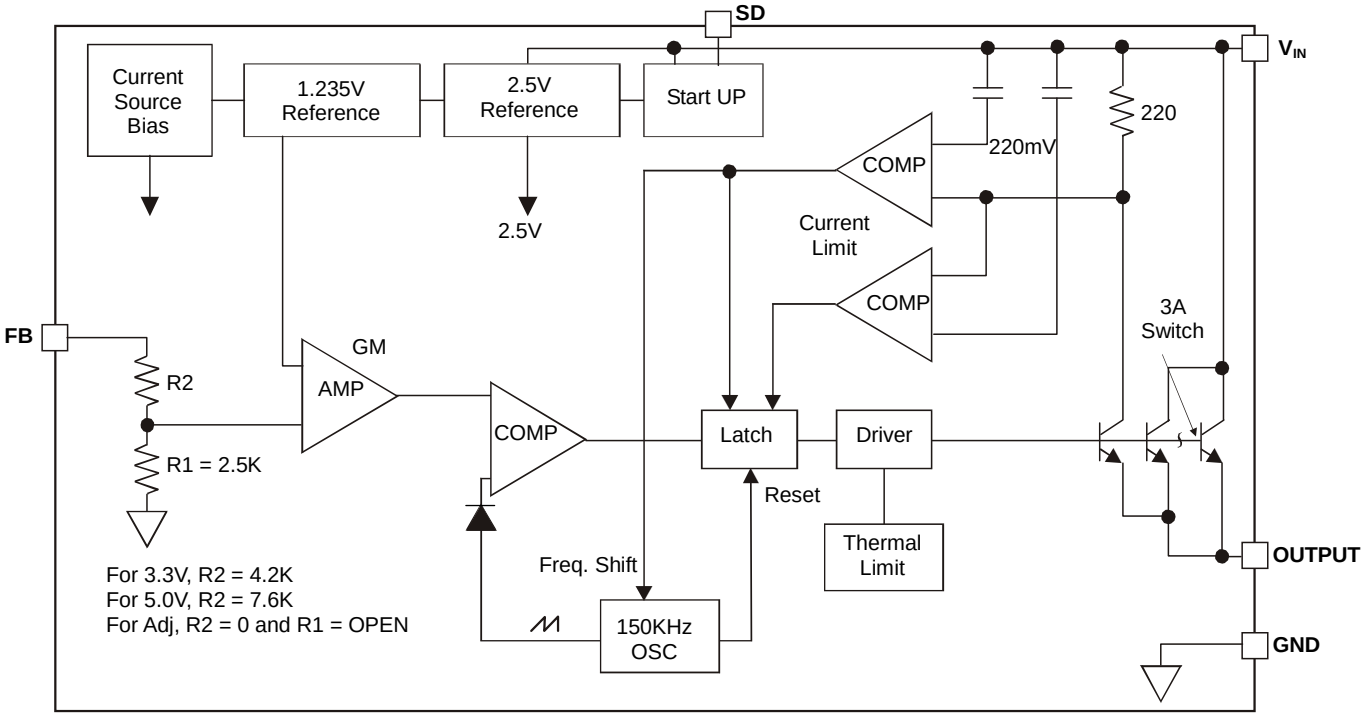

Electrical Characteristics: GM7230-ADJ

(Specifications with standard type face are for T = 25°C, and those with bold face type apply over full Operating Temperature rage)

Parameter	Condition	Symbol	Min	Typ	Max	Unit
Output Voltage	4.5V ≤ V_{IN} ≤ 40V, 0.2A ≤ I_{LOAD} ≤ 3A, V_{OUT} = 3V	V_{OUT}	1.193 **1.180**	1.230	1.267 **1.280**	V
Efficiency	V_{IN} =12V, I_{LOAD}=2.0A, V_{OUT} = 3V	η		73		%

Electrical Characteristics: GM7230-3.3

(Specifications with standard type face are for T = 25°C, and those with bold face type apply over full Operating Temperature rage)

Parameter	Condition	Symbol	Min	Typ	Max	Unit
Output Voltage	4.75V ≤ V_{IN} ≤ 40V, 0.2A ≤ I_{LOAD} ≤ 3A	V_{OUT}	3.168 **3.135**	3.300	3.432 **3.465**	V
Efficiency	V_{IN} =12V, I_{LOAD}=2.0A	η		73		%

Electrical Characteristics: GM7230-5.0

(Specifications with standard type face are for T = 25°C, and those with bold face type apply over full Operating Temperature rage)

Parameter	Condition	Symbol	Min	Typ	Max	Unit
Output Voltage	7V ≤ V_{IN} ≤ 40V, 0.2A ≤ I_{LOAD} ≤ 3A	V_{OUT}	4.800 **4.7500**	5.000	5.200 **5.250**	V
Efficiency	V_{IN} =12V, I_{LOAD}=2.0A	η		80		%

Electrical Characteristics: GM7230-12

(Specifications with standard type face are for T = 25°C, and those with bold face type apply over full Operating Temperature rage)

Parameter	Condition	Symbol	Min	Typ	Max	Unit
Output Voltage	15V ≤ V_{IN} ≤ 40V, 0.5A ≤ I_{LOAD} ≤ 3A	V_{OUT}	11.52 **11.40**	12.00	12.48 **12.60**	V
Efficiency	V_{IN} =15V, I_{LOAD}=3.0A	η		88		%

Electrical Characteristics: All Output Voltage Versions

(Specifications with standard type face are for T_J = 25°C, and those with bold face type apply over full Operating Temperature rage. Unless otherwise specified, V_{IN} = 12V for 3.3V, 5V, and Adjustable version, and V_{IN} = 24V for 12V version, I_{LOAD} = 500mA)

Parameter	Condition	Symbol	Min	Typ	Max	Unit
Feedback Bias Current	V_{FB} =1.3V (Adjustable Version Only)	I_b	-	10	50 **100**	nA
Oscillator Frequency	(Note 6)	f_o	127 **110**	150	173 **173**	kHz
Saturation Voltage	I_{OUT} = 3A (Notes 7, 8)	V_{SAT}	-	1.16	1.4 **1.5**	V
Max Duty Cycle (ON)	(Note 8)	DC		100	**-**	%
Min Duty Cycle (OFF)	(Note 9)	DC		0		%
Current Limit	Peak Current (Notes 7, 8)	I_{CL}	3.4			A
Output Leakage Current	Output =0V (Notes 7, 9, 10)	I_L	-	-	100	µA
	Output = -0.9V (Note 10)		-	2	**-**	mA
Quiescent Current	(Note 9)	I_Q	-	5	-	mA
Standby Quiescent Current	SD Pin = 5V (OFF), Note 10	I_{STBY}	-	70	200	µA
SD Pin Logic Input Level	Low (ON)	V_{IH}	-	1.3	0.6	V
	High (OFF)	V_{IL}	2.0	1.3	-	
SD Pin Input Current	V_{LOGIC} = 2.5V (OFF)	I_H		5	15	µA
	V_{LOGIC} = 0.5V (ON)	I_L		0.02	5	µA

Note 1: Absolute Maximum Ratings indicate limits beyond which damage to the device may occur. Operating Ratings indicate conditions for which the device is intended to be functional, but do not guarantee specific performance limits. For guaranteed specifications and test conditions, see the Electrical Characteristics.

Note 2: The human body model is a 100pF capacitor discharged through a 1.5KΩresistor into each pin.

Note 3: Typical numbers are at 25°C and represent the most likely norm.

Note 4: All limits guaranteed at room temperature (standard type face) and at temperature extremes (bold type face). All room temperature limits are 100% production tested. All limits at temperature extremes are guaranteed via correlation using standard Statistical Quality Control (SQC) methods. All limits are used to calculate Average Outgoing Quality Level (AOQL).

Note 5: External components such as the catch diode, inductor, input and output capacitors, and voltage programming resistors can affect switching regulator system performance. When the GM7230 is used as shown in the Figure 1 test circuit, system performance will be as shown in system parameters section of Electrical Characteristics.

Note 6: The switching frequency is reduced when the second stage current limit is activated.

Note 7: No diode, inductor or capacitor connected to output pin.

Note 8: Feedback pin removed from output and connected to 0V to force the output transistor switch ON.

Note 9: Feedback pin removed from output and connected to 12V for the 3.3V, 5V, and the ADJ. version.

Test Circuit and Layout Guidelines

Careful layout is important with any switching regulators. Rapidly switching currents associated with wiring inductance generate voltage transients which can cause problems. To minimize inductance and ground loops, the lengths of the leads indicated by heavy lines in Figure 1&2 below should be kept as short as possible. Single point grounding (as indicated or ground plane construction should be used for best results. When using the Adjustable version, place the programming resistors as close as possible to GM7230, to keep the sensitive feedback wiring short.

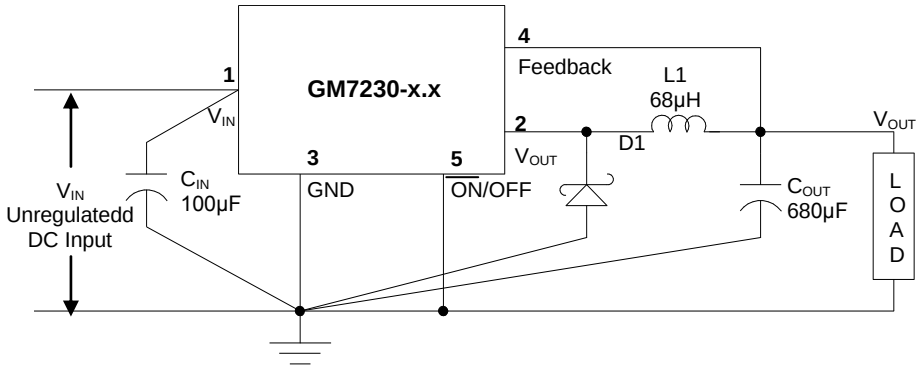

Figure 1 Fixed Ouput Votlage Versions

C_{IN} = 470μF, Aluminum Electrolytic
C_{OUT} = 220μF, 25V, Aluminum Electrolytic
D1 = Schottky, 5A/40V
L1 = 68μH

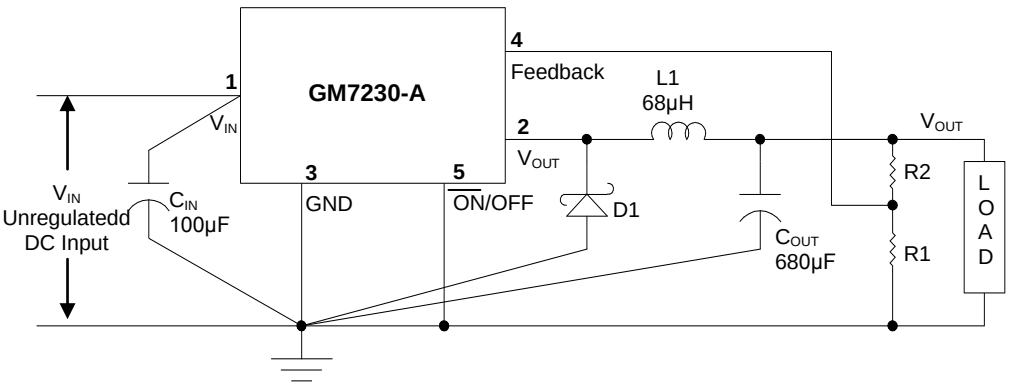

Figure 2 Adjustable Ouput Votlage Versions

C_{IN} = 470μF, Aluminum Electrolytic
C_{OUT} = 220μF, 25V, Aluminum Electrolytic
D1 = Schottky, 5A/40V
L1 = 68μH

$V_{OUT} = V_{REF} (1 + R2/R1)$

Typical Performance Characteristics

Figure 3. Switch Saturation Voltage

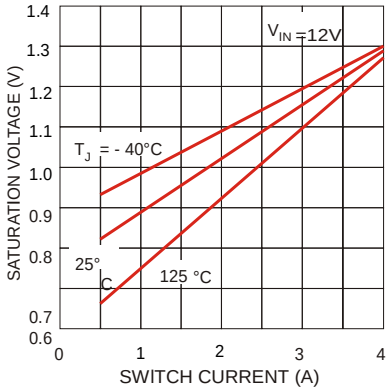

Figure 4. Switch Current Limit

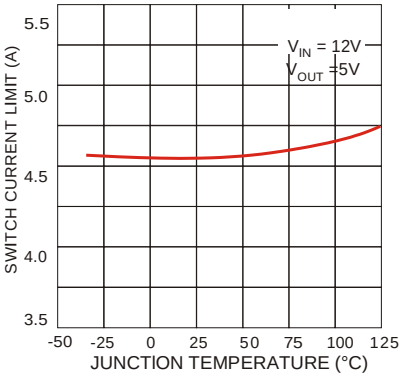

Figure 5. Dropout Voltage

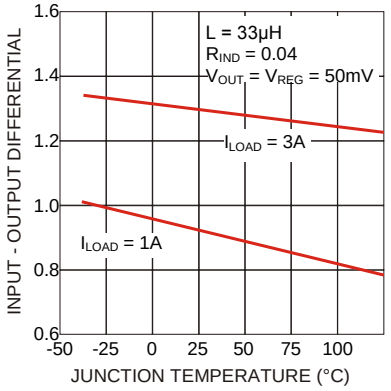

Figure 6. Operating Quiescent Current

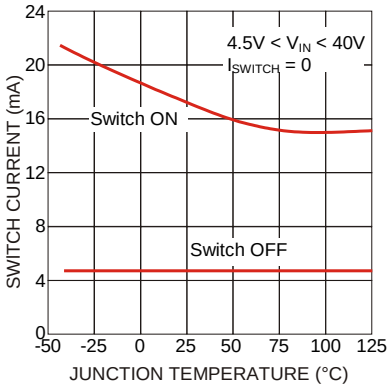

Figure 7. Shutdown Quiescent Current

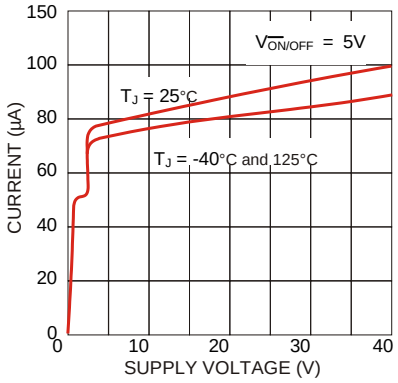

Figure 8. Minimum Operating Supply Voltage

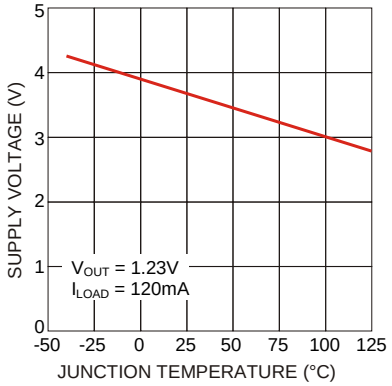

Figure 9. SD Pin Current (Sinking)

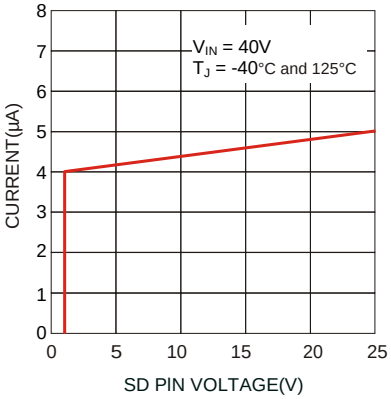

Figure 10. Switching Frequency

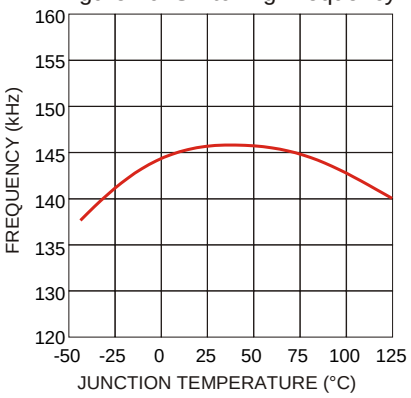

Package Outline Dimensions – TO-263-5

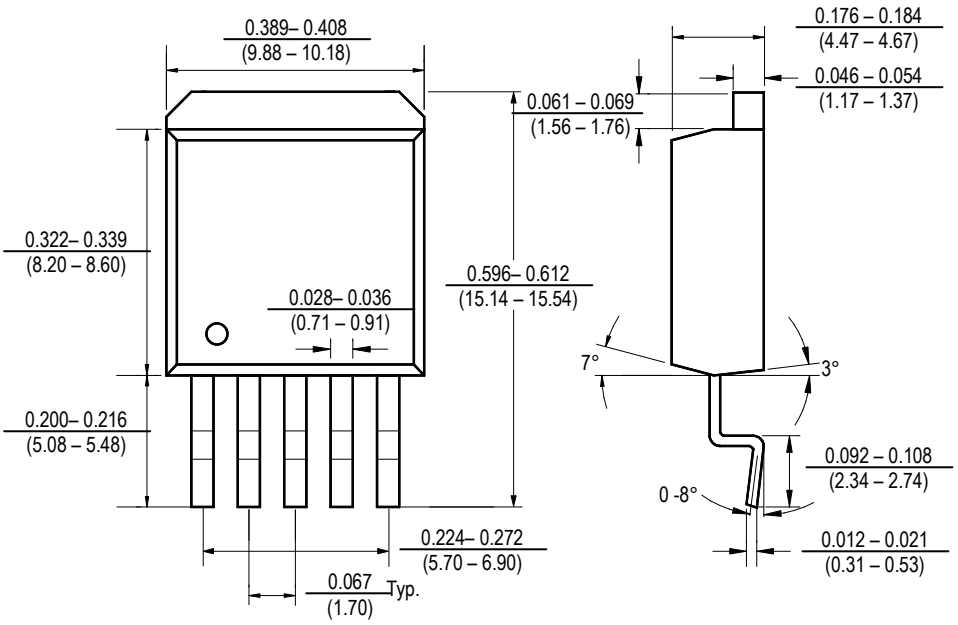

Package Outline Dimensions – TO-220-5

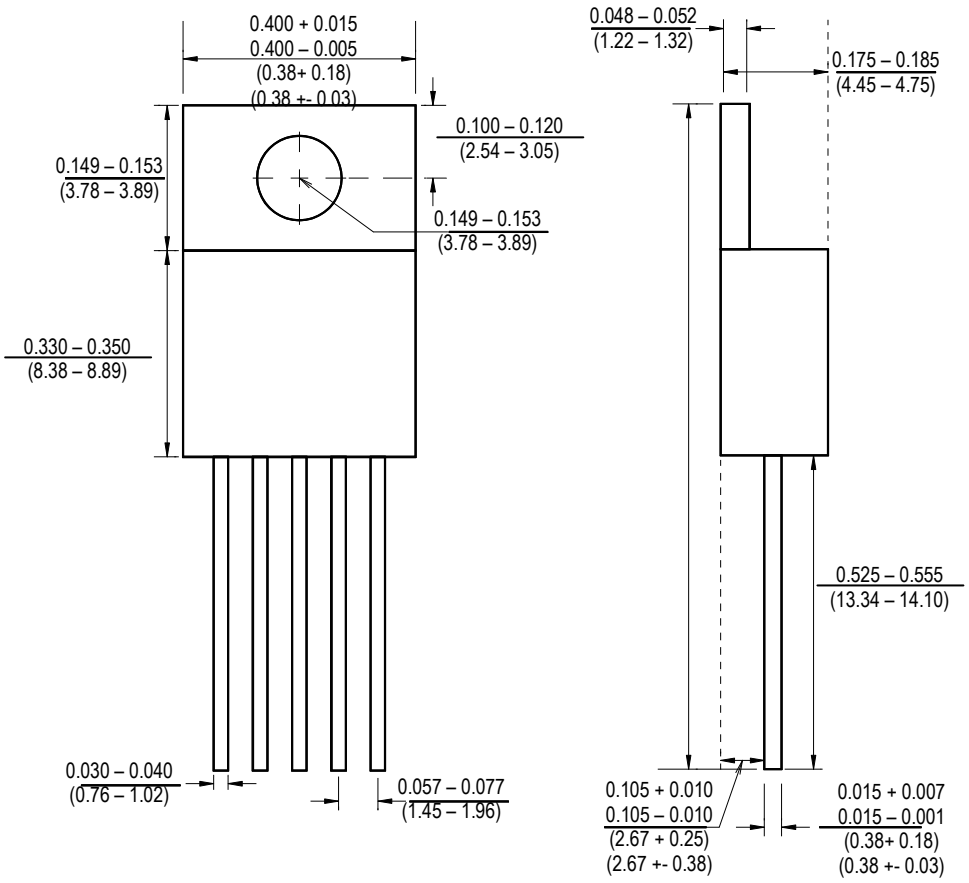

Package Outline Dimensions – TO-220B-5

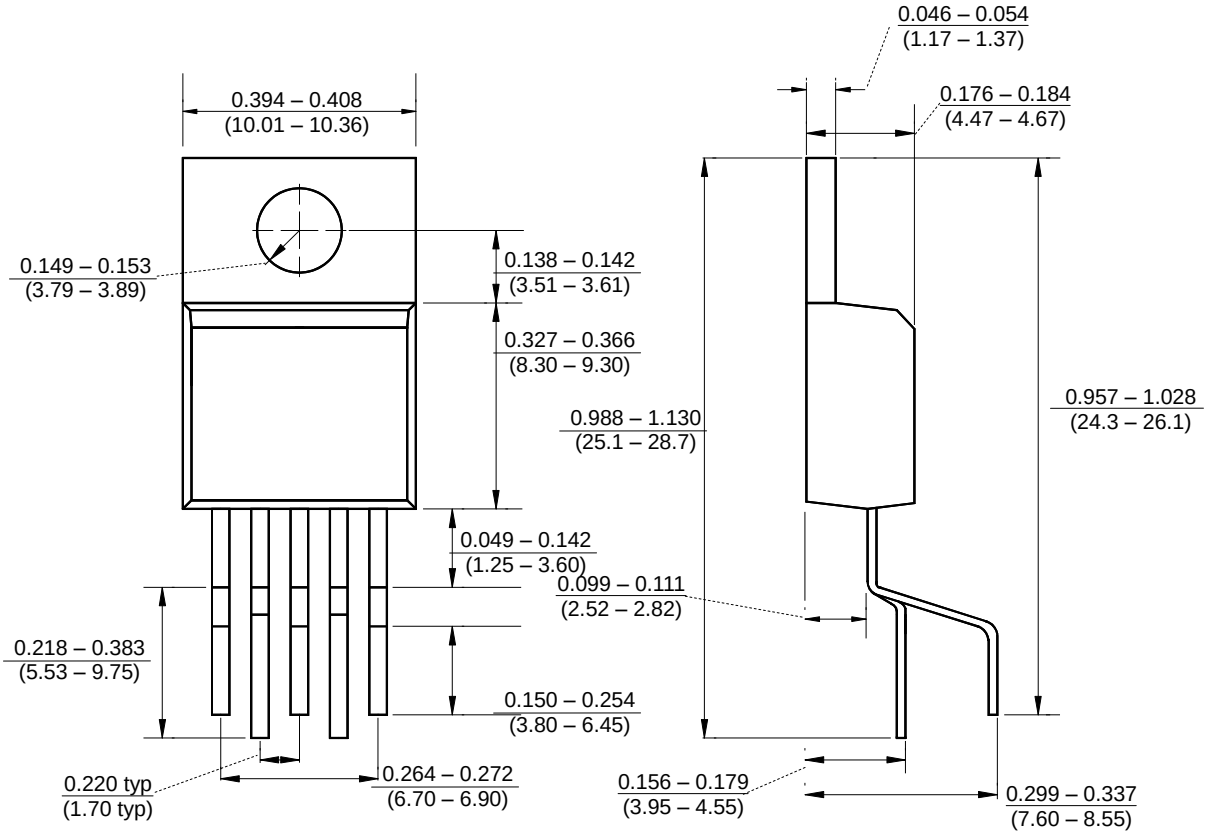

Inches
(mm)

Ordering Number

GM	7230	A	TA5	R	G
APM Gamma Micro	Circuit Type	Output Voltage	Package Type	Shipping Type	
		A: Adj 3.3 = 3.3V 5.0 = 5.0V 12 = 12.0V	TA5: TO263-5 TB5: TO-220-5 TB5B: TO-220B-5	R: Taping & Reel T: Tube	Blank: Pb-Free G: Green

Note:

Pb-free products:

- RoHS compliant and compatible with the current require-ments of IPC/JEDEC J-STD-020.
- Suitable for use in Pb-free soldering processes with 100% matte tin (Sn) plating.

Green products:

- Lead-free (RoHS compliant)
- Halogen free(Br or Cl does not exceed 900ppm by weight in homogeneous material and total of Br and Cl does not exceed 1500ppm by weight)

НИОКР СИСТЕМС

ООО «НИОКРсистемс» - это оперативные поставки широкого спектра электронных компонентов отечественного и импортного производства напрямую от производителей и с крупнейших мировых складов. Реализуемая нашей компанией продукция насчитывает более полумиллиона наименований.

Благодаря этому наша компания предлагает к поставке практически не ограниченный ассортимент компонентов как оптовыми, мелкооптовыми партиями, так и в розницу.

Благодаря развитой сети поставщиков, помогаем в поиске и приобретении экзотичных или снятых с производства компонентов.

Наша компания это:

- Гарантия качества поставляемой продукции
- Широкий ассортимент
- Минимальные сроки поставок
- Техническая поддержка
- Подбор комплектации
- Индивидуальный подход
- Гибкое ценообразование
- Работаем по 275 ФЗ

ООО «НИОКР СИТЕМС»
Москва, 125362, Россия, ул. Вишневая, д. 9, к. 1, Блок 104 а и 104 в

Телефон: 8 (495) 268-14-82
Email: n@nsistems.ru

ИНН: 7735154786
ОГРН: 1167746717709