FAIRCHILD SEMICONDUCTOR®

March 2007

74AC573, 74ACT573
Octal Latch with 3-STATE Outputs

Features

- I_{CC} and I_{OZ} reduced by 50%
- Inputs and outputs on opposite sides of package allowing easy interface with microprocessors
- Useful as input or output port for microprocessors
- Functionally identical to 74AC373 and 74ACT373
- 3-STATE outputs for bus interfacing
- Outputs source/sink 24mA
- 74ACT573 has TTL-compatible inputs

General Description

The 74AC573 and 74ACT573 are high-speed octal latches with buffered common Latch Enable (LE) and buffered common Output Enable ($\overline{OE}$) inputs.

The 74AC573 and 74ACT573 are functionally identical to the 74AC373 and 74ACT373 but with inputs and outputs on opposite sides.

Ordering Information

Order Number	Package Number	Package Description
74AC573SC	M20B	20-Lead Small Outline Integrated Circuit (SOIC), JEDEC MS-013, 0.300" Wide
74AC573SJ	M20D	20-Lead Small Outline Package (SOP), EIAJ TYPE II, 5.3mm Wide
74AC573MTC	MTC20	20-Lead Thin Shrink Small Outline Package (TSSOP), JEDEC MO-153, 4.4mm Wide
74ACT573SC	M20B	20-Lead Small Outline Integrated Circuit (SOIC), JEDEC MS-013, 0.300" Wide
74ACT573SCX_NL(1)	M20B	20-Lead Small Outline Integrated Circuit (SOIC), JEDEC MS-013, 0.300" Wide
74ACT573SJ	M20D	20-Lead Small Outline Package (SOP), EIAJ TYPE II, 5.3mm Wide
74ACT573MTC	MTC20	20-Lead Thin Shrink Small Outline Package (TSSOP), JEDEC MO-153, 4.4mm Wide
74ACT573PC	N20A	20-Lead Plastic Dual-In-Line Package (PDIP), JEDEC MS-001, 0.300" Wide

Device also available in Tape and Reel. Specify by appending suffix letter “X” to the ordering number.
Pb-Free package per JEDEC J-STD-020B.

Note:

1. Device available in Tape and Reel only.

FACT™ is a trademark of Fairchild Semiconductor Corporation.

©1988 Fairchild Semiconductor Corporation

Logic Symbols

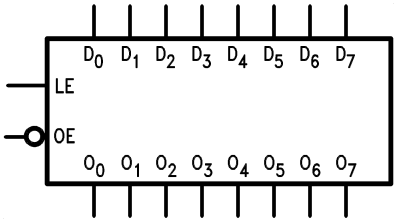

IEEE/IEC

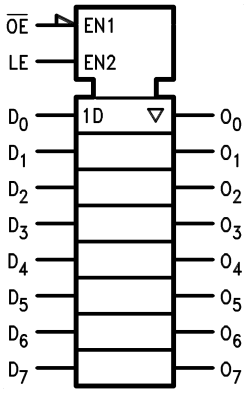

Connection Diagram

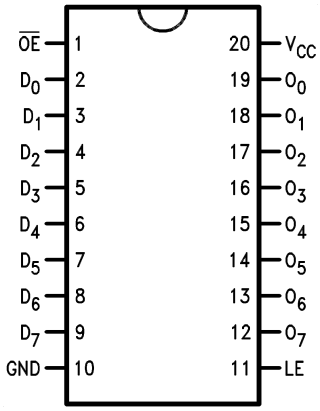

Truth Table

Inputs			Outputs
$\overline{OE}$	LE	D	O_n
L	H	H	H
L	H	L	L
L	L	X	O_0
H	X	X	Z

H = HIGH Voltage

L = LOW Voltage

Z = High Impedance

X = Immaterial

O_0 = Previous O_0 before HIGH-to-LOW transition of Latch Enable

Pin Descriptions

Pin Names	Description
D_0–D_7	Data Inputs
LE	Latch Enable Input
$\overline{OE}$	3-STATE Output Enable Input
O_0–O_7	3-STATE Latch Outputs

Functional Description

The 74AC573 and 74ACT573 contain eight D-type latches with 3-STATE output buffers. When the Latch Enable (LE) input is HIGH, data on the D_n inputs enters the latches. In this condition the latches are transparent, i.e., a latch output will change state each time its D-type input changes. When LE is LOW the latches store the information that was present on the D-type inputs a setup time preceding the HIGH-to-LOW transition of LE. The 3-STATE buffers are controlled by the Output Enable ($\overline{OE}$) input. When $\overline{OE}$ is LOW, the buffers are enabled. When $\overline{OE}$ is HIGH the buffers are in the high impedance mode but this does not interfere with entering new data into the latches.

©1988 Fairchild Semiconductor Corporation

Logic Diagram

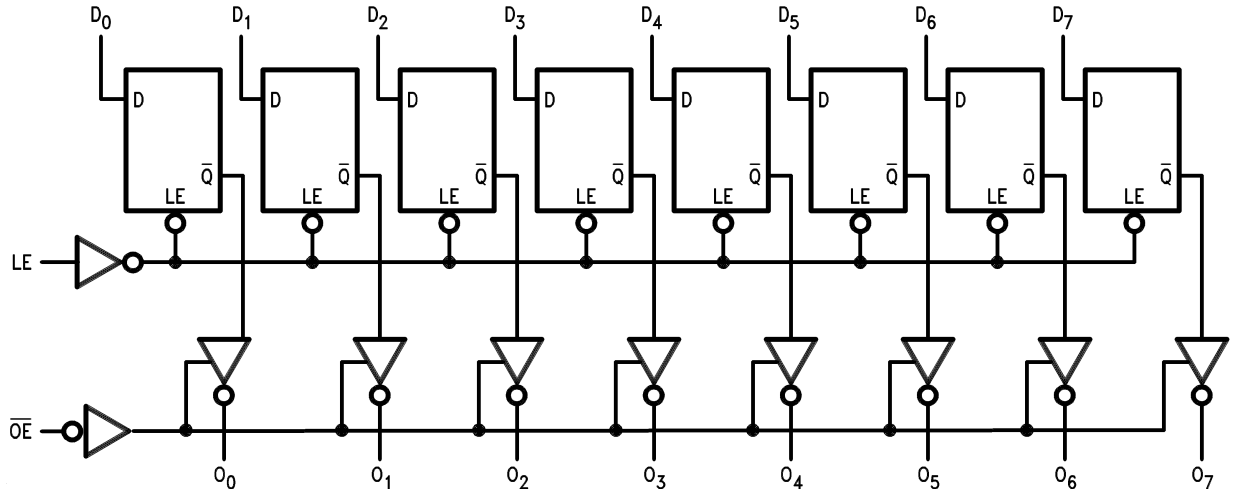

Please note that this diagram is provided only for the understanding of logic operations and should not be used to estimate propagation delays.

Absolute Maximum Ratings

Stresses exceeding the absolute maximum ratings may damage the device. The device may not function or be operable above the recommended operating conditions and stressing the parts to these levels is not recommended. In addition, extended exposure to stresses above the recommended operating conditions may affect device reliability. The absolute maximum ratings are stress ratings only.

Symbol	Parameter	Rating
V_{CC}	Supply Voltage	–0.5V to +7.0V
I_{IK}	DC Input Diode Current	
	$V_I = -0.5V$	–20mA
	$V_I = V_{CC} + 0.5V$	+20mA
V_I	DC Input Voltage	–0.5V to V_{CC} + 0.5V
I_{OK}	DC Output Diode Current	
	$V_O = -0.5V$	–20mA
	$V_O = V_{CC} + 0.5V$	+20mA
V_O	DC Output Voltage	–0.5V to V_{CC} + 0.5V
I_O	DC Output Source or Sink Current	±50mA
I_{CC} or I_{GND}	DC V_{CC} or Ground Current per Output Pin	±50mA
T_{STG}	Storage Temperature	–65°C to +150°C
T_J	Junction Temperature	140°C

Recommended Operating Conditions

The Recommended Operating Conditions table defines the conditions for actual device operation. Recommended operating conditions are specified to ensure optimal performance to the datasheet specifications. Fairchild does not recommend exceeding them or designing to absolute maximum ratings.

Symbol	Parameter	Rating
V_{CC}	Supply Voltage	
	AC	2.0V to 6.0V
	ACT	4.5V to 5.5V
V_I	Input Voltage	0V to V_{CC}
V_O	Output Voltage	0V to V_{CC}
T_A	Operating Temperature	–40°C to +85°C
$\Delta V / \Delta t$	Minimum Input Edge Rate, AC Devices: V_{IN} from 30% to 70% of V_{CC}, V_{CC} @ 3.0V, 4.5V, 5.5V	125mV/ns
$\Delta V / \Delta t$	Minimum Input Edge Rate, ACT Devices: V_{IN} from 0.8V to 2.0V, V_{CC} @ 4.5V, 5.5V	125mV/ns

©1988 Fairchild Semiconductor Corporation

DC Electrical Characteristics for AC

Symbol	Parameter	V_{CC} (V)	Conditions	T_A = +25°C		T_A = –40°C to +85°C	Units
				Typ.	Guaranteed Limits		
V_{IH}	Minimum HIGH Level Input Voltage	3.0	V_{OUT} = 0.1V or V_{CC} – 0.1V	1.5	2.1	2.1	V
		4.5		2.25	3.15	3.15	
		5.5		2.75	3.85	3.85	
V_{IL}	Maximum LOW Level Input Voltage	3.0	V_{OUT} = 0.1V or V_{CC} – 0.1V	1.5	0.9	0.9	V
		4.5		2.25	1.35	1.35	
		5.5		2.75	1.65	1.65	
V_{OH}	Minimum HIGH Level Output Voltage	3.0	I_{OUT} = –50μA	2.99	2.9	2.9	V
		4.5		4.49	4.4	4.4	
		5.5		5.49	5.4	5.4	
		3.0	V_{IN} = V_{IL} or V_{IH}: I_{OH} = –12mA		2.56	2.46	V
		4.5	I_{OH} = –24mA		3.86	3.76	
		5.5	I_{OH} = –24mA(2)		4.86	4.76	
V_{OL}	Maximum LOW Level Output Voltage	3.0	I_{OUT} = 50μA	0.002	0.1	0.1	V
		4.5		0.001	0.1	0.1	
		5.5		0.001	0.1	0.1	
		3.0	V_{IN} = V_{IL} or V_{IH}: I_{OL} = 12mA		0.36	0.44	
		4.5	I_{OL} = 24mA		0.36	0.44	
		5.5	I_{OL} = 24mA(2)		0.36	0.44	
I_{IN}(3)	Maximum Input Leakage Current	5.5	V_I = V_{CC}, GND		±0.1	±1.0	μA
I_{OLD}	Minimum Dynamic Output Current(4)	5.5	V_{OLD} = 1.65V Max.			75	mA
I_{OHD}		5.5	V_{OHD} = 3.85V Min.			–75	mA
I_{CC}(3)	Maximum Quiescent Supply Current	5.5	V_{IN} = V_{CC} or GND		4.0	40.0	μA
I_{OZ}	Maximum 3-STATE Leakage Current	5.5	V_I (OE) = V_{IL}, V_{IH}; V_I = V_{CC}, GND; V_O = V_{CC}, GND		±0.25	±2.5	μA

Notes:

2. All outputs loaded; thresholds on input associated with output under test.
3. I_{IN} and I_{CC} @ 3.0V are guaranteed to be less than or equal to the respective limit @ 5.5V V_{CC}.
4. Maximum test duration 2.0ms, one output loaded at a time.

©1988 Fairchild Semiconductor Corporation

DC Electrical Characteristics for ACT

Symbol	Parameter	V_{CC} (V)	Conditions	T_A = +25°C Typ.	T_A = –40°C to +85°C Guaranteed Limits		Units
V_{IH}	Minimum HIGH Level Input Voltage	4.5	V_{OUT} = 0.1V or V_{CC} – 0.1V	1.5	2.0	2.0	V
		5.5		1.5	2.0	2.0	
V_{IL}	Maximum LOW Level Input Voltage	4.5	V_{OUT} = 0.1V or V_{CC} – 0.1V	1.5	0.8	0.8	V
				5.5	1.5	0.8	
V_{OH}	Minimum HIGH Level Output Voltage	4.5	I_{OUT} = –50 µA	4.49	4.4	4.4	V
		5.5		5.49	5.4	5.4	
		4.5	$V_{IN} = V_{IL}$ or V_{IH}: I_{OH} = –24mA		3.86	3.76	
		5.5	I_{OH} = –24mA(5)		4.86	4.76	
V_{OL}	Maximum LOW Level Output Voltage	4.5	I_{OUT} = 50 µA	0.001	0.1	0.1	V
		5.5		0.001	0.1	0.1	
		4.5	$V_{IN} = V_{IL}$ or V_{IH}: I_{OL} = 24mA		0.36	0.44	
		5.5	I_{OL} = 24mA(5)		0.36	0.44	
I_{IN}	Maximum Input Leakage Current	5.5	$V_I = V_{CC}$, GND		±0.1	±1.0	µA
I_{OZ}	Maximum 3-STATE Leakage Current	5.5	$V_I = V_{IL}$, V_{IH}; $V_O = V_{CC}$, GND		±0.25	±2.5	µA
I_{CCT}	Maximum I_{CC}/Input	5.5	$V_I = V_{CC}$ – 2.1V	0.6		1.5	mA
I_{OLD}	Minimum Dynamic Output Current(6)	5.5	V_{OLD} = 1.65V Max.			75	mA
I_{OHD}		5.5	V_{OHD} = 3.85V Min.			–75	mA
I_{CC}	Maximum Quiescent Supply Current	5.5	$V_{IN} = V_{CC}$ or GND		4.0	40.0	µA

Notes:

5. All outputs loaded; thresholds on input associated with output under test.
6. Maximum test duration 2.0ms, one output loaded at a time.

AC Electrical Characteristics for AC

Symbol	Parameter	V_{CC} (V)[7]	T_A = +25°C, C_L = 50pF			T_A = –40°C to +85°C, C_L = 50pF		Units
			Min.	Typ.	Max.	Min.	Max.	
t_{PHL}	Propagation Delay, D_n to O_n	3.3	0.5	8.5	10.5	2.5	11.0	ns
t_{PLH}		5.0	1.5	5.5	7.0	1.5	7.5	
t_{PLH}	Propagation Delay, LE to O_n	3.3	2.5	8.5	12.0	2.5	12.5	ns
t_{PHL}		5.0	2.0	6.0	8.0	2.0	8.5	
t_{PZL}	Output Enable Time	3.3	2.5	8.5	13.0	2.5	13.5	ns
t_{PZH}		5.0	1.5	6.0	8.5	1.5	9.0	
t_{PHZ}	Output Disable Time	3.3	1.0	9.0	14.5	1.0	15.0	ns
t_{PLZ}		5.0	1.0	6.0	9.5	1.0	10.0	

Note:

7. Voltage range 5.0 is 5.0V ± 0.5V. Voltage range 3.3 is 3.3V ± 0.3V.

AC Operating Requirements for AC

Symbol	Parameter	V_{CC} (V)[8]	T_A = +25°C, C_L = 50pF	T_A = –40°C to +85°C, C_L = 50pF		Units
			Typ.	Guaranteed Minimum		
t_S	Setup Time, HIGH or LOW, D_n to LE	3.3	0	3.0	3.0	ns
		5.0	0	3.0	3.0	
t_H	Hold Time, HIGH or LOW, D_n to LE	3.3	0	1.5	1.5	ns
		5.0	0	1.5	1.5	
t_W	LE Pulse Width, HIGH	3.3	2.0	4.0	4.0	ns
		5.0	2.0	4.0	4.0	

Note:

8. Voltage range 5.0 is 5.0V ± 0.5V. Voltage range 3.3 is 3.3V ± 0.3V.

©1988 Fairchild Semiconductor Corporation

AC Electrical Characteristics for ACT

Symbol	Parameter	V_{CC} (V)[9]	T_A = +25°C, C_L = 50pF			T_A = –40°C to +85°C, C_L = 50pF		Units
			Min.	Typ.	Max.	Min.	Max.	
t_{PLH} t_{PHL}	Propagation Delay, D_n to O_n	5.0	2.5	6.0	10.5	2.0	12.0	ns
t_{PLH}	Propagation Delay, LE to O_n	5.0	3.0	6.0	10.5	2.5	12.0	ns
t_{PHL}	Propagation Delay, LE to O_n	5.0	2.5	5.5	9.5	2.0	10.5	ns
t_{PZH}	Output Enable Time	5.0	2.0	5.5	10.0	1.5	11.0	ns
t_{PZL}	Output Enable Time	5.0	1.5	5.5	9.5	1.5	10.5	ns
t_{PHZ}	Output Disable Time	5.0	2.5	6.5	11.0	1.5	12.5	ns
t_{PLZ}	Output Disable Time	5.0	1.5	5.0	8.5	1.0	9.5	ns

Note:

9. Voltage range 5.0 is 5.0V ± 0.5V.

AC Operating Requirements for ACT

Symbol	Parameter	V_{CC} (V)[10]	T_A = +25°C, C_L = 50pF		T_A = –40°C to +85°C, C_L = 50pF	Units
			Typ.	Guaranteed Minimum		
t_S	Setup Time, HIGH or LOW, D_n to LE	5.0	1.5	3.0	3.5	ns
t_H	Hold Time, HIGH or LOW, D_n to LE	5.0	–1.5	0	0	ns
t_W	LE Pulse Width, HIGH	5.0	2.0	3.5	4.0	ns

Note:

10. Voltage range 5.0 is 5.0V ± 0.5V.

Capacitance

Symbol	Parameter	Conditions	Typ.	Units
C_{IN}	Input Capacitance	V_{CC} = OPEN	5.0	pF
C_{PD}	Power Dissipation Capacitance AC ACT	V_{CC} = 5.0V	 25.0 42.0	pF

Physical Dimensions

Dimensions are in inches (millimeters) unless otherwise noted.

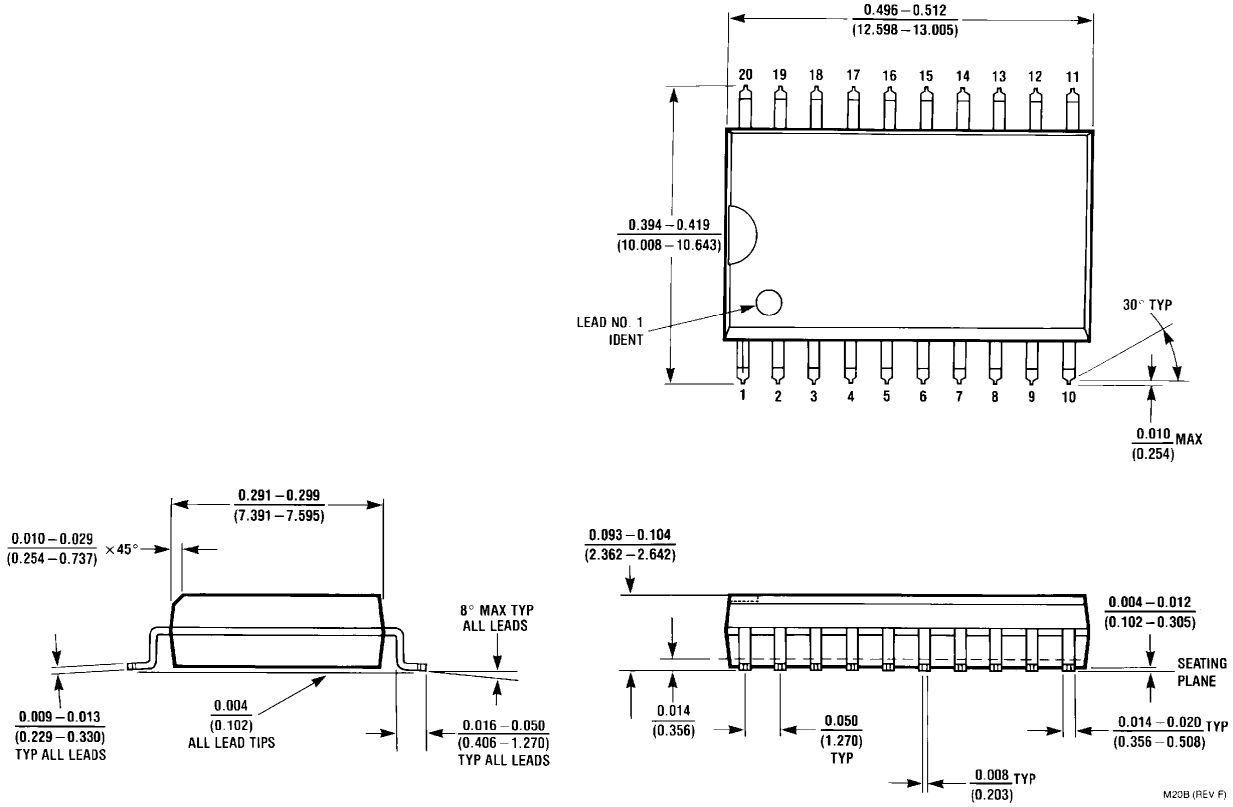

Figure 1. 20-Lead Small Outline Integrated Circuit (SOIC), JEDEC MS-013, 0.300" Wide
Package Number M20B

Physical Dimensions (Continued)

Dimensions are in millimeters unless otherwise noted.

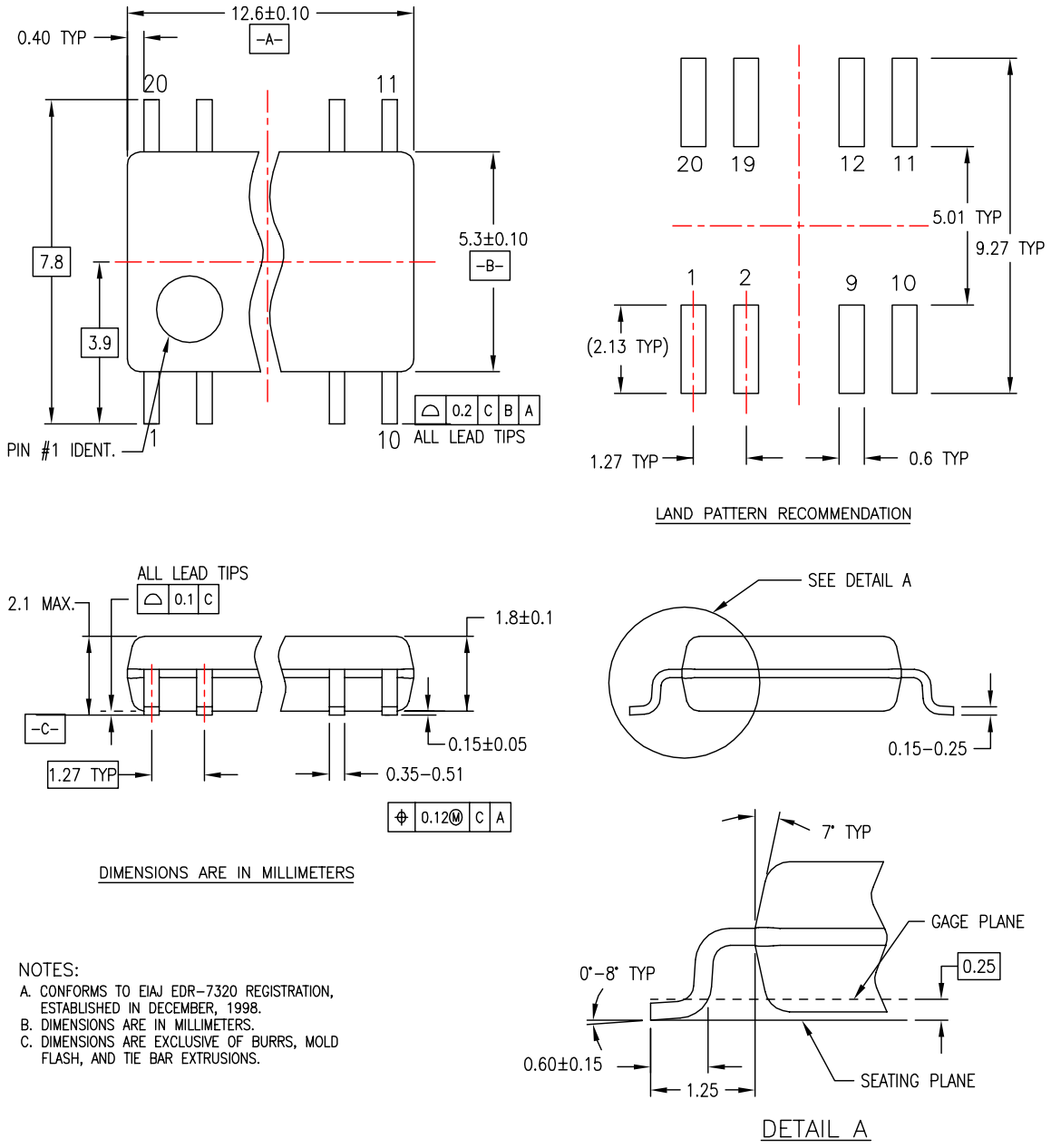

NOTES:

A. CONFORMS TO EIAJ EDR-7320 REGISTRATION, ESTABLISHED IN DECEMBER, 1998.
B. DIMENSIONS ARE IN MILLIMETERS.
C. DIMENSIONS ARE EXCLUSIVE OF BURRS, MOLD FLASH, AND TIE BAR EXTRUSIONS.

Figure 2. 20-Lead Small Outline Package (SOP), EIAJ TYPE II, 5.3mm Wide Package Number M20D

Physical Dimensions (Continued)

Dimensions are in millimeters unless otherwise noted.

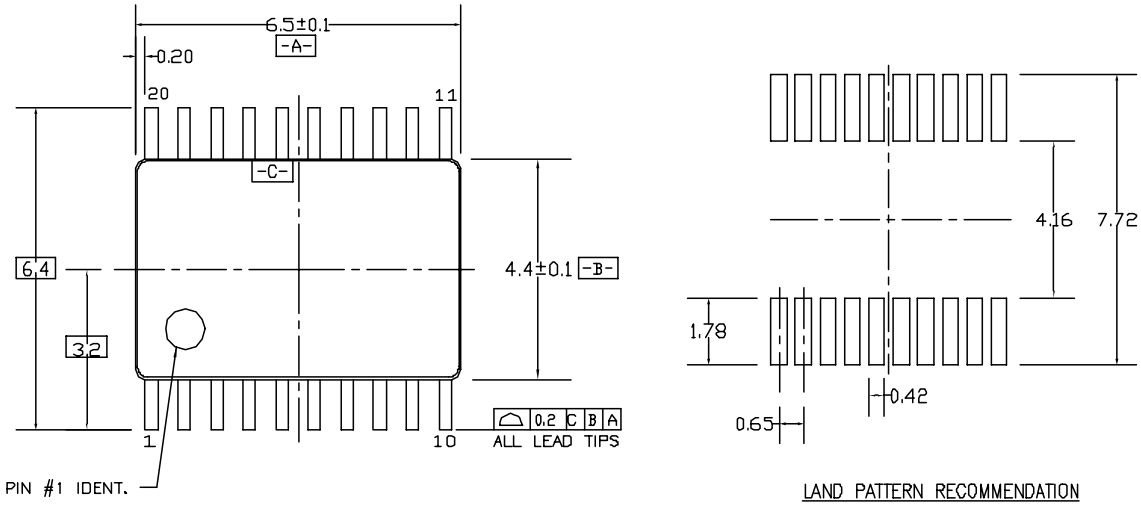

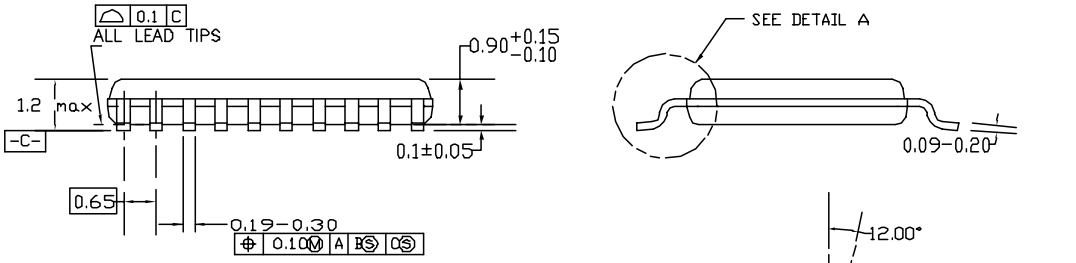

DIMENSIONS ARE IN MILLIMETERS

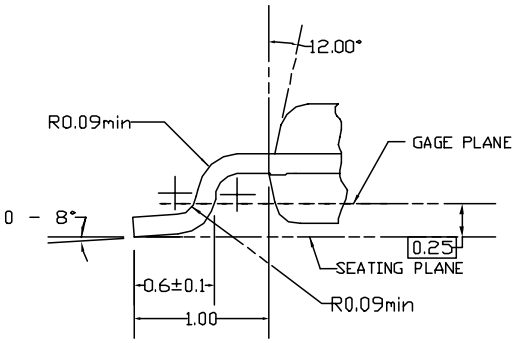

DETAIL A

NOTES:

A. CONFORMS TO JEDEC REGISTRATION MO-153, VARIATION AC, REF NOTE 6, DATE 7/93.

B. DIMENSIONS ARE IN MILLIMETERS.

C. DIMENSIONS ARE EXCLUSIVE OF BURRS, MOLDS FLASH, AND TIE BAR EXTRUSIONS.

D. DIMENSIONS AND TOLERANCES PER ANSI Y14.5M, 1982.

MTC20REVD1

Figure 3. 20-Lead Thin Shrink Small Outline Package (TSSOP), JEDEC MO-153, 4.4mm Wide Package Number MTC20

Physical Dimensions (Continued)

Dimensions are in inches (millimeters) unless otherwise noted.

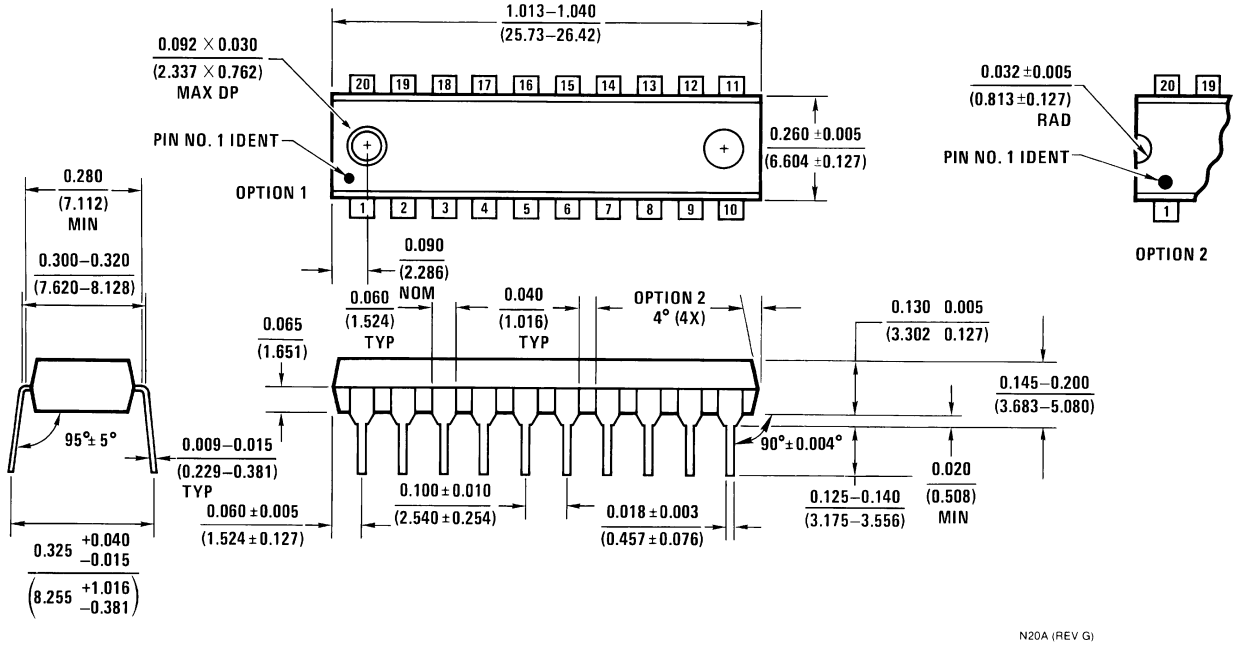

Figure 4. 20-Lead Plastic Dual-In-Line Package (PDIP), JEDEC MS-001, 0.300" Wide Package Number N20A

FAIRCHILD SEMICONDUCTOR®

TRADEMARKS

The following are registered and unregistered trademarks Fairchild Semiconductor owns or is authorized to use and is not intended to be an exhaustive list of all such trademarks.

ACEx®
Across the board. Around the world.™
ActiveArray™
Bottomless™
Build it Now™
CoolFET™
CROSSVOLT™
CTL™
Current Transfer Logic™
DOME™
E^2CMOS™
EcoSPARK®
EnSigna™
FACT Quiet Series™
FACT®
FAST®
FASTr™
FPS™
FRFET®
GlobalOptoisolator™
GTO™
HiSeC™
i-Lo™
ImpliedDisconnect™
IntelliMAX™
ISOPLANAR™
MICROCOUPLER™
MicroPak™
MICROWIRE™
MSX™
MSXPro™
OCX™
OCXPro™
OPTOLOGIC®
OPTOPLANAR®
PACMAN™
POP™
Power220®
Power247®
PowerEdge™
PowerSaver™
PowerTrench®
Programmable Active Droop™
QFET®
QS™
QT Optoelectronics™
Quiet Series™
RapidConfigure™
RapidConnect™
ScalarPump™
SMART START™
SPM®
STEALTH™
SuperFET™
SuperSOT™-3
SuperSOT™-6
SuperSOT™-8
SyncFET™
TCM™
The Power Franchise®
™
TinyBoost™
TinyBuck™
TinyLogic®
TINYOPTO™
TinyPower™
TinyWire™
TruTranslation™
µSerDes™
UHC®
UniFET™
VCX™
Wire™

DISCLAIMER

FAIRCHILD SEMICONDUCTOR RESERVES THE RIGHT TO MAKE CHANGES WITHOUT FURTHER NOTICE TO ANY PRODUCTS HEREIN TO IMPROVE RELIABILITY, FUNCTION OR DESIGN. FAIRCHILD DOES NOT ASSUME ANY LIABILITY ARISING OUT OF THE APPLICATION OR USE OF ANY PRODUCT OR CIRCUIT DESCRIBED HEREIN; NEITHER DOES IT CONVEY ANY LICENSE UNDER ITS PATENT RIGHTS, NOR THE RIGHTS OF OTHERS. THESE SPECIFICATIONS DO NOT EXPAND THE TERMS OF FAIRCHILD'S WORLDWIDE TERMS AND CONDITIONS, SPECIFICALLY THE WARRANTY THEREIN, WHICH COVERS THESE PRODUCTS.

LIFE SUPPORT POLICY

FAIRCHILD'S PRODUCTS ARE NOT AUTHORIZED FOR USE AS CRITICAL COMPONENTS IN LIFE SUPPORT DEVICES OR SYSTEMS WITHOUT THE EXPRESS WRITTEN APPROVAL OF FAIRCHILD SEMICONDUCTOR CORPORATION.

As used herein:

1. Life support devices or systems are devices or systems which, (a) are intended for surgical implant into the body or (b) support or sustain life, and (c) whose failure to perform when properly used in accordance with instructions for use provided in the labeling, can be reasonably expected to result in a significant injury of the user.
2. A critical component in any component of a life support, device, or system whose failure to perform can be reasonably expected to cause the failure of the life support device or system, or to affect its safety or effectiveness.

PRODUCT STATUS DEFINITIONS

Definition of Terms

Datasheet Identification	Product Status	Definition
Advance Information	Formative or In Design	This datasheet contains the design specifications for product development. Specifications may change in any manner without notice.
Preliminary	First Production	This datasheet contains preliminary data; supplementary data will be published at a later date. Fairchild Semiconductor reserves the right to make changes at any time without notice to improve design.
No Identification Needed	Full Production	This datasheet contains final specifications. Fairchild Semiconductor reserves the right to make changes at any time without notice to improve design.
Obsolete	Not In Production	This datasheet contains specifications on a product that has been discontinued by Fairchild Semiconductor. The datasheet is printed for reference information only.

Rev. I24

НИОКР СИСТЕМС

ООО «НИОКРсистемс» - это оперативные поставки широкого спектра электронных компонентов отечественного и импортного производства напрямую от производителей и с крупнейших мировых складов. Реализуемая нашей компанией продукция насчитывает более полумиллиона наименований.

Благодаря этому наша компания предлагает к поставке практически не ограниченный ассортимент компонентов как оптовыми, мелкооптовыми партиями, так и в розницу.

Благодаря развитой сети поставщиков, помогаем в поиске и приобретении экзотичных или снятых с производства компонентов.

Наша компания это:

- Гарантия качества поставляемой продукции
- Широкий ассортимент
- Минимальные сроки поставок
- Техническая поддержка
- Подбор комплектации
- Индивидуальный подход
- Гибкое ценообразование
- Работаем по 275 ФЗ

ООО «НИОКР СИТЕМС»
Москва, 125362, Россия, ул. Вишневая, д. 9, к. 1, Блок 104 а и 104 в

Телефон: 8 (495) 268-14-82
Email: n@nsistems.ru

ИНН: 7735154786
ОГРН: 1167746717709