AT91RM9200-EK Evaluation Board

User Guide

Table of Contents

Section 1

Overview 1-1

1.1 Scope 1-1
1.2 Deliverables 1-2
1.3 The AT91RM9200-EK Evaluation Board 1-3

Section 2

Setting Up the AT91RM9200-EK Evaluation Board 2-1

2.1 Electrostatic Warning 2-1
2.2 Requirements 2-1
2.3 Powering Up the Board 2-1
2.4 Getting Started with the AT91RM9200 2-1

Section 3

Board Description 3-1

3.1 AT91RM9200 Processor 3-1
3.2 Memory 3-2
3.3 Memory Card 3-2
3.4 Clock Circuitry and Analog Functions 3-2
3.5 Reset Circuitry 3-2
3.6 Power Supply Circuitry 3-2
3.7 Remote Communication 3-2
3.8 User Interface 3-2
3.9 Expansion Slot 3-3
3.10 Debug Interface 3-3
3.11 Wrapping User Area 3-3

Section 4

Configuration Straps 4-1

4.1 Configuration Straps and Jumper Settings 4-1

Section 5

Schematics 5-1

5.1 Schematics 5-1

Section 6

Errata 6-1

6.1 Errata 6-1
6.1.1 SD/MMC Card slot communication problem 6-1

Section 1

Overview

1.1 Scope

The AT91RM9200-EK Evaluation Board enables real-time code development and evaluation. It supports the AT91RM9200 ARM9™-based 32-bit RISC microcontroller.

This guide focuses on the AT91RM9200-EK Evaluation Board as an evaluation and demonstration platform:

- Section 1 is this overview.
- Section 2 gives information on setting up the installation.
- Section 3 contains a description of the development board.
- Section 4 details the configuration straps.
- Section 5 shows board schematics.
- Section 6 contains errata.

1.2 Deliverables

The development kit is delivered with:

- One AC adapter 100 - 240V ~ 1.2A, 12V, 50 - 60 Hz with adapters
- One modem RS232 cable
- One RJ45 Ethernet crossed cable
- One A/B-type USB cable
- One AT91 DVD-ROM containing summary and full datasheets, datasheets with electrical and mechanical characteristics, application notes and getting started documents for all development boards and AT91 microcontrollers. An AT91 software package with C and assembly listings is also provided. This allows the user to begin evaluating the AT91 ARM® Thumb® 32-bit microcontroller quickly.
- CD ROMs from third parties, providing solutions for operating system evaluation
- DataFlash® Cards to provide demonstrations of operating systems when inserted in the bootable slot

Note: To boot on a DataFlash Card:
- Ensure J15 (BMS) is set on position 1-2
- Insert the DataFlash Card in the J200 socket (bottom side)
- Reset the board

Further details are given on the AT91 DVD-ROM.

Note: These deliverables are subject to change without notice.

1.3 The AT91RM9200-EK Evaluation Board

The board consists of an AT91RM9200 together with the following:

- 8 Mbytes of parallel Flash memory
- Four banks of 2M x 32-bit SDRAM
- DataFlash® or SD/MMC memory expansion socket
- Additional DataFlash memory expansion socket
- Digital-to-Analog Converter (DAC) for a stereo audio signal
- Four communication ports (USB host and device, Ethernet, serial and DBGU)
- Graphic controller with output to a standard VGA monitor
- JTAG/ICE, ETM and code test port interface
- Expansion connector
- Onboard prototype area

Figure 1-1. AT91RM9200-EK Evaluation Board Block Diagram

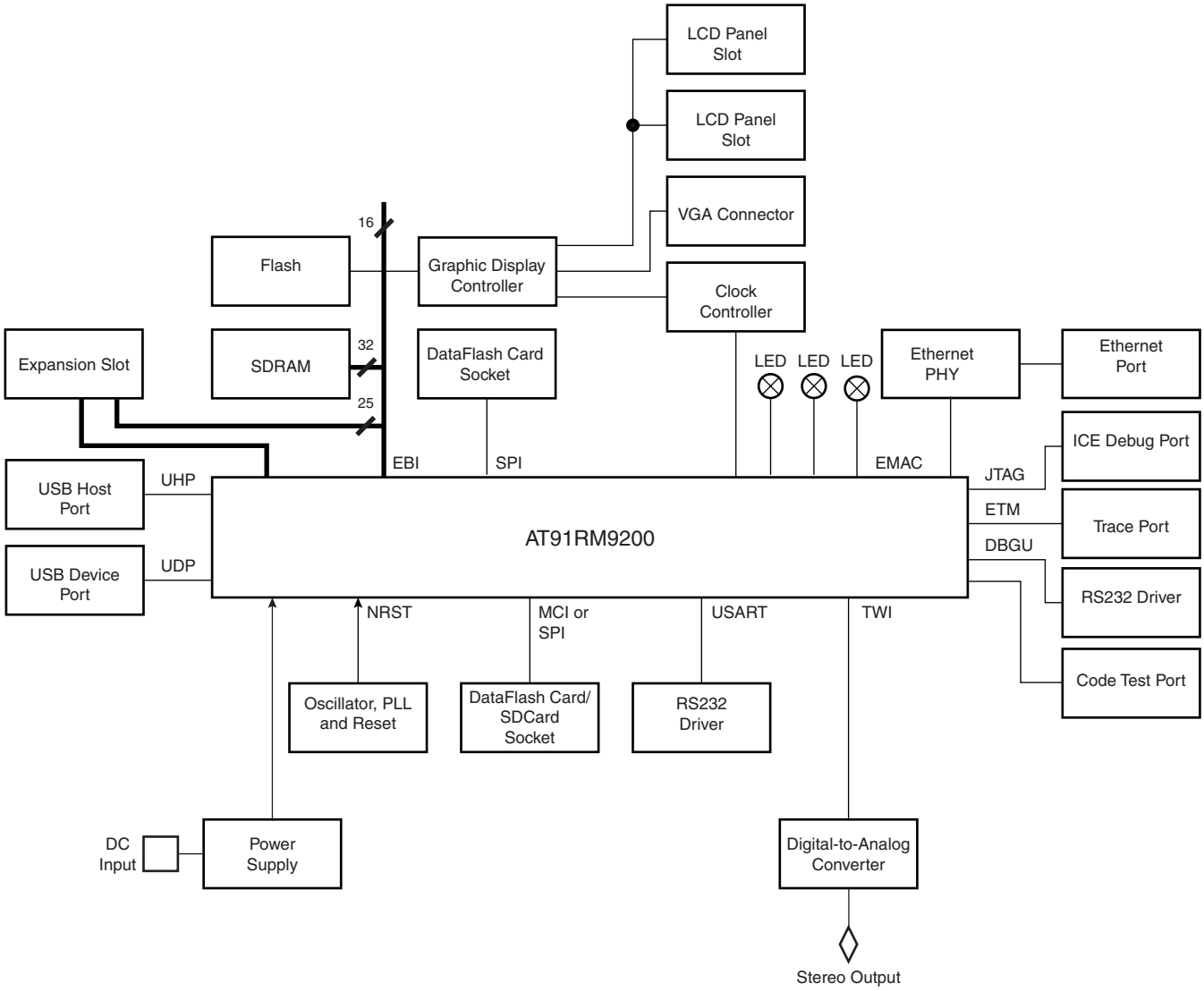

Section 2

Setting Up the AT91RM9200-EK Evaluation Board

2.1 Electrostatic Warning

The AT91RM9200-EK Evaluation Board is shipped in protective anti-static packaging. The board must not be subjected to high electrostatic potentials. A grounding strap or similar protective device should be worn when handling the board. Avoid touching the component pins or any other metallic element.

2.2 Requirements

In order to connect the AT91RM9200-EK Evaluation Board, the following element is required:

- The AT91RM9200-EK Evaluation Board itself

2.3 Powering Up the Board

DC power is supplied to the board via the 2.1 mm socket (J1). The polarity of the power supply is not critical. The minimum voltage required is 7V.

The board has three voltage regulators providing 1.8V, 3.3V and 5V. The regulators allow the input voltage range to be from 7V to 12V.

2.4 Getting Started with the AT91RM9200

The AT91RM9200-EK Evaluation Board is delivered with a DVD-ROM containing all necessary information and step-by-step procedures for working with the most common development tool chains. Please refer to this DVD-ROM, or to the AT91 web site, http://www.atmel.com/products/AT91/ for the most up-to-date information on getting started with the AT91RM9200.

Section 3

Board Description

3.1 AT91RM9200 Processor

- Incorporates the ARM920T™ ARM® Thumb® Processor
  - 200 MIPS at 180 MHz
  - 16-KByte Data Cache, 16-KByte Instruction Cache, Write Buffer
  - Memory Management Unit
  - In-circuit Emulator including Debug Communication Channel
  - Mid-level Implementation Embedded Trace Macrocell™
- Additional Embedded Memories
  - 16K Bytes of SRAM and 128K Bytes of ROM
- External Bus Interface (EBI)
  - Supports SDRAM, Static Memory, Burst Flash, Glueless Connection to CompactFlash®, SmartMedia® and NAND Flash
- System Peripherals:
  - Enhanced Clock Generator and Power Management Controller
  - Two On-chip Oscillators with Two PLLs
  - Very Slow Clock Operating Mode and Software Power Optimization Capabilities
  - Four Programmable External Clock Signals
  - System Timer Including Periodic Interrupt, Watchdog and Second Counter
  - Real-time Clock with Alarm Interrupt
  - Debug Unit, Two-wire UART and Support for Debug Communication Channel
  - Advanced Interrupt Controller with 8-level Priority, Individually Maskable Vectored Interrupt Sources, Spurious Interrupt Protected
  - Seven External Interrupt Sources and One Fast Interrupt Source
  - Four 32-bit PIO Controllers with Up to 122 Programmable I/O Lines, Input Change Interrupt and Open-drain Capability on Each Line
  - 20-channel Peripheral DMA Controller (PDC)
- Ethernet MAC 10/100 Base-T
- USB 2.0 Full Speed (12 M-bits per second) Host Double Port and Device Port

- MultiMedia Card Interface (MCI)
- Three Synchronous Serial Controllers (SSC)
- Four Universal Synchronous/Asynchronous Receiver/Transmitters (USART)
- Master/Slave Serial Peripheral Interface (SPI)
- Two 3-channel, 16-bit Timer/Counters (TC)
- Two-wire Interface (TWI)
- IEEE 1149.1 JTAG Boundary Scan on All Digital Pins

3.2 Memory

- 8-Mbyte parallel Flash memory
- Four banks of 2M x 32-bit SDRAM

3.3 Memory Card

- SD Card/MMC
  - Supports MultiMedia and SD Card
  - Analog switches provide support for DataFlash® Card
- Additional DataFlash Card Socket

3.4 Clock Circuitry and Analog Functions

- 32.768 kHz standard crystal for the AT91RM9200
- 18.432 MHz standard crystal for the AT91RM9200
- 50 MHz CMOS oscillator for the Display Controller and Ethernet PHY

3.5 Reset Circuitry

- Reset Controller

3.6 Power Supply Circuitry

- 5V DC/DC converter
- 3.3V DC/DC converter
- 1.8V Linear regulator

3.7 Remote Communication

- Fast Ethernet Physical Layer Single Chip Transceiver
- Host Interface via RS-232 DB9 male socket
- Debug Port via RS-232 DB9 connector
- Host and Device USB socket

3.8 User Interface

- Graphic Display Controller
- TFT/SNT panel socket

- 15-pin standard socket for an external VGA monitor
- Three LEDs managed via general PIO lines
- Stereo Audio Jack connected to a DAC

3.9 Expansion Slot

- The expansion slot gives access to all the microcontroller's signals.

3.10 Debug Interface

- 38-pin trace Port socket (ETM)
- 38-pin Code Test port socket
- 20-pin JTAG ICE interface connector
- Serial Debug Unit

3.11 Wrapping User Area

- Onboard prototype area allowing the developer to fit additional components.

Section 4

Configuration Straps

4.1 Configuration Straps and Jumper Settings

Table 4-1 gives details on configuration straps and jumper settings on the AT91RM9200-EK Evaluation Board and their default settings.

Table 4-1. Configuration Straps and Jumper Settings

Designation	Default Setting	Feature
J13	Closed	Available for measuring VDDCORE current.
J15	1 - 2	The AT91RM9200 boots from internal ROM and can also boot from external SPI DataFlash® connected on NPCS0.
	2 - 3	The AT91RM9200 boots from Flash memory connected on NCS0.

Section 5

Schematics

5.1 Schematics

This section contains the following schematics:

- AT91RM9200-EK Board Layout, Rev. 63PC042262A01 - Top View
- AT91RM9200-EK Board Layout, Rev. 63PC042262A01 - Bottom View
- Power Supply
- AT91RM9200 Chip
- Debug
- SDRAM and Flash
- RMII Ethernet
- Stereo Audio DAC
- Serial Interfaces
- VGA Display
- Expansion Connector

Figure 5-1. AT91RM9200-EK Board Layout, Rev. 63PC042262A01 - Top View

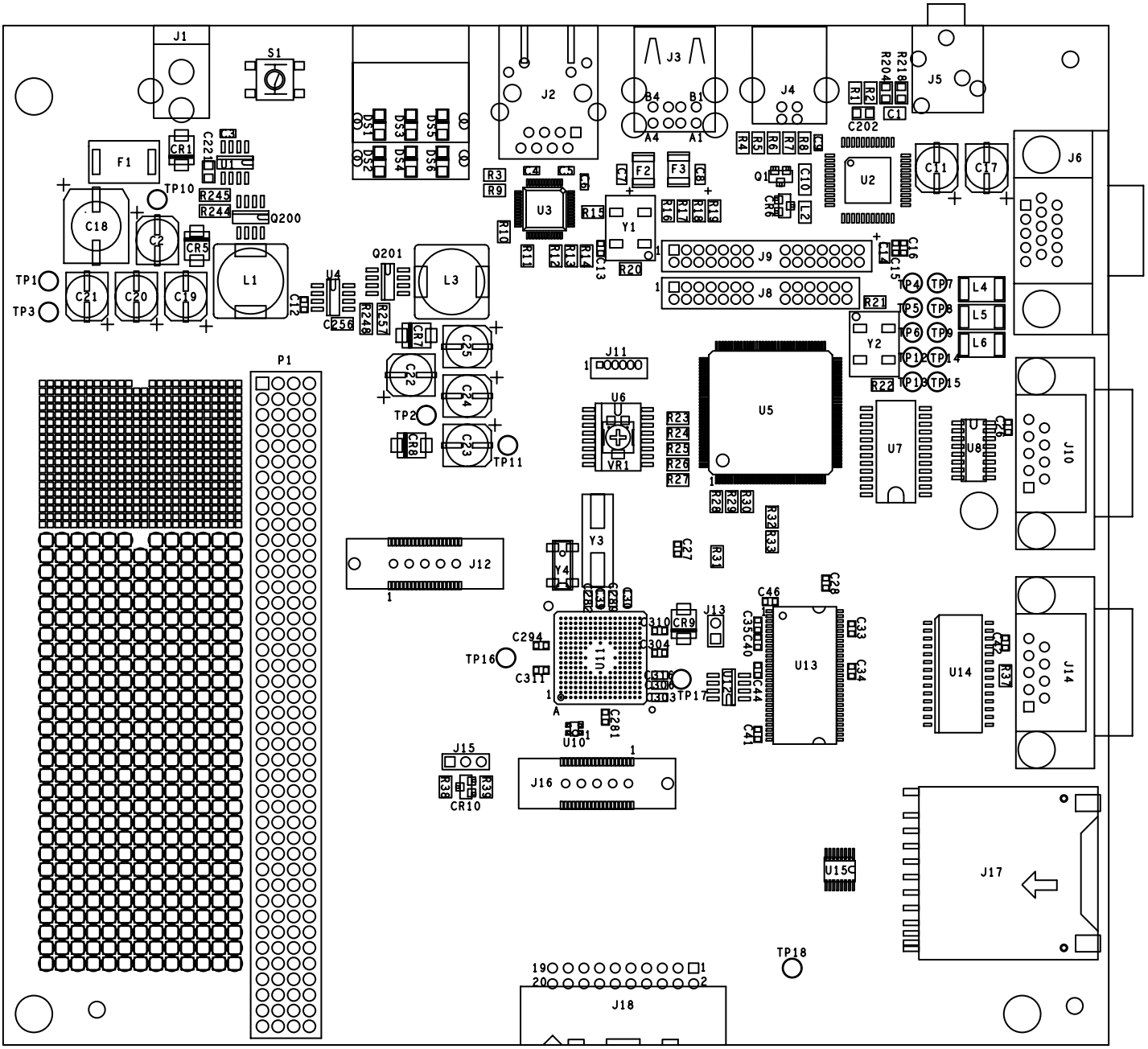

Figure 5-2. AT91RM9200-EK Board Layout, Rev. 63PC042262A01 - Bottom View

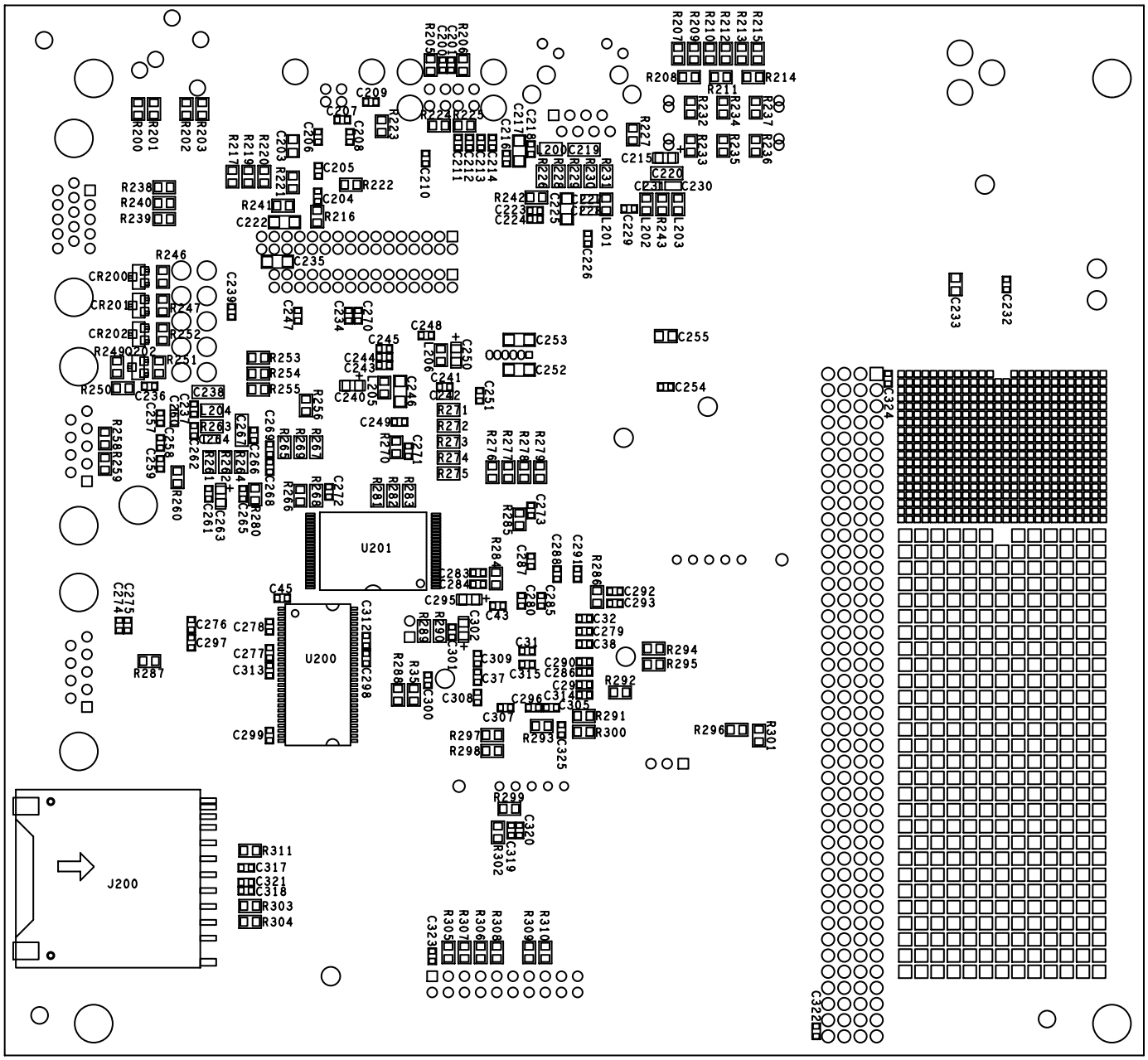

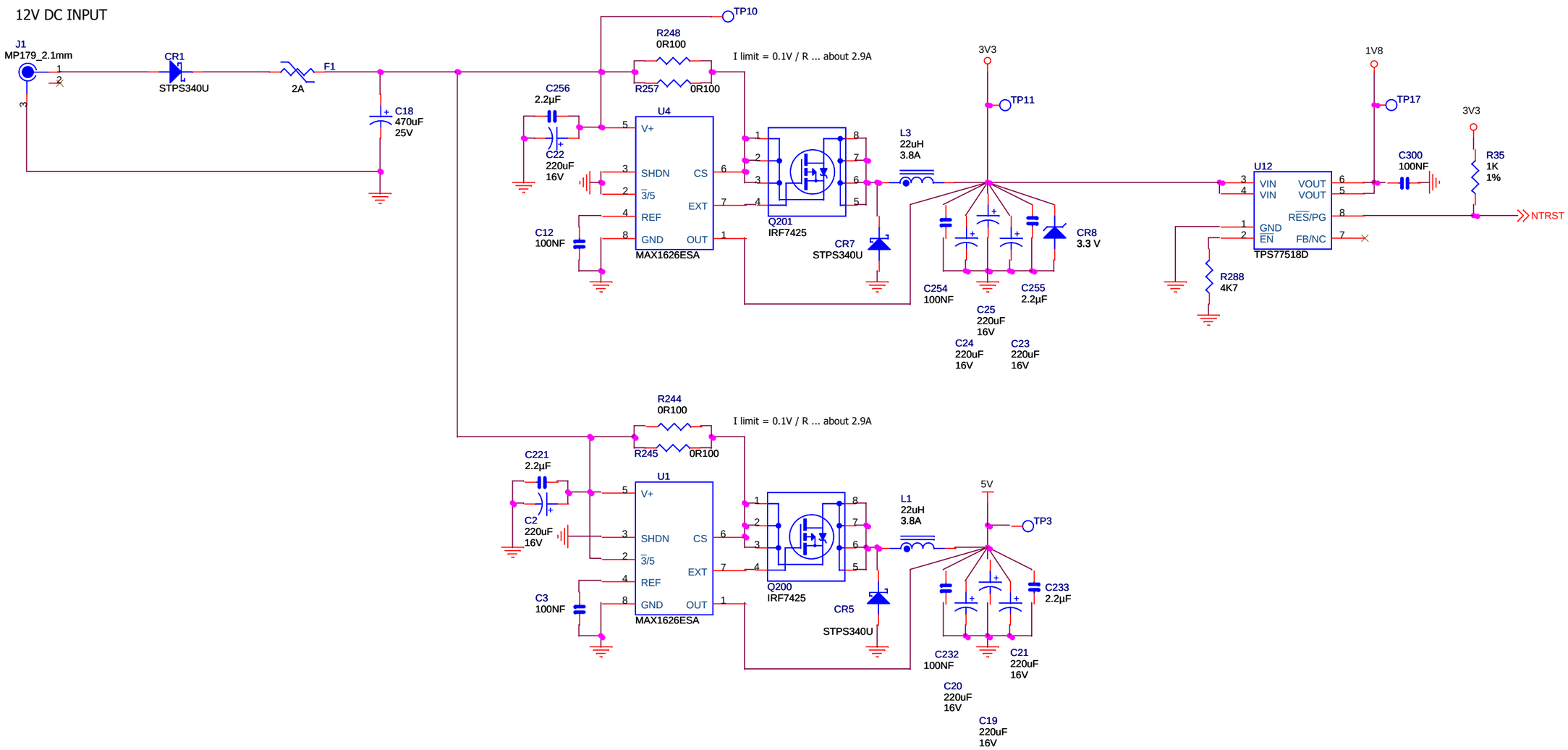

Z3 - Z5 are mounting holes.
The Z reference designators
are not listed on the actual
board.

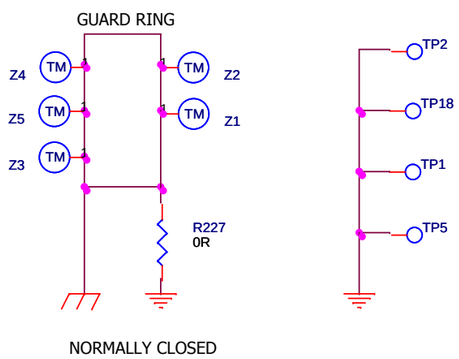

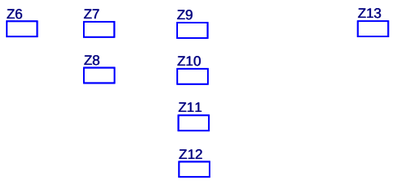

Wednesday, February 23, 2005

REV	MODIF.	DES.	DATE	VER.	DATE
B	101-3-05-106	ELX	23/02/05	JPG	23/02/05
A	INIT EDIT	MDZ	04/01/05	JPG	06/01/05

ATMEL ROUSSET

AT91RM9200-EK

POWER SUPPLY

SCALE 1/1

63SC042261 A01

REV. SHEET 1/9

This agreement is our property. Reproduction and publication without our written authorization shall expose offender to legal proceedings.

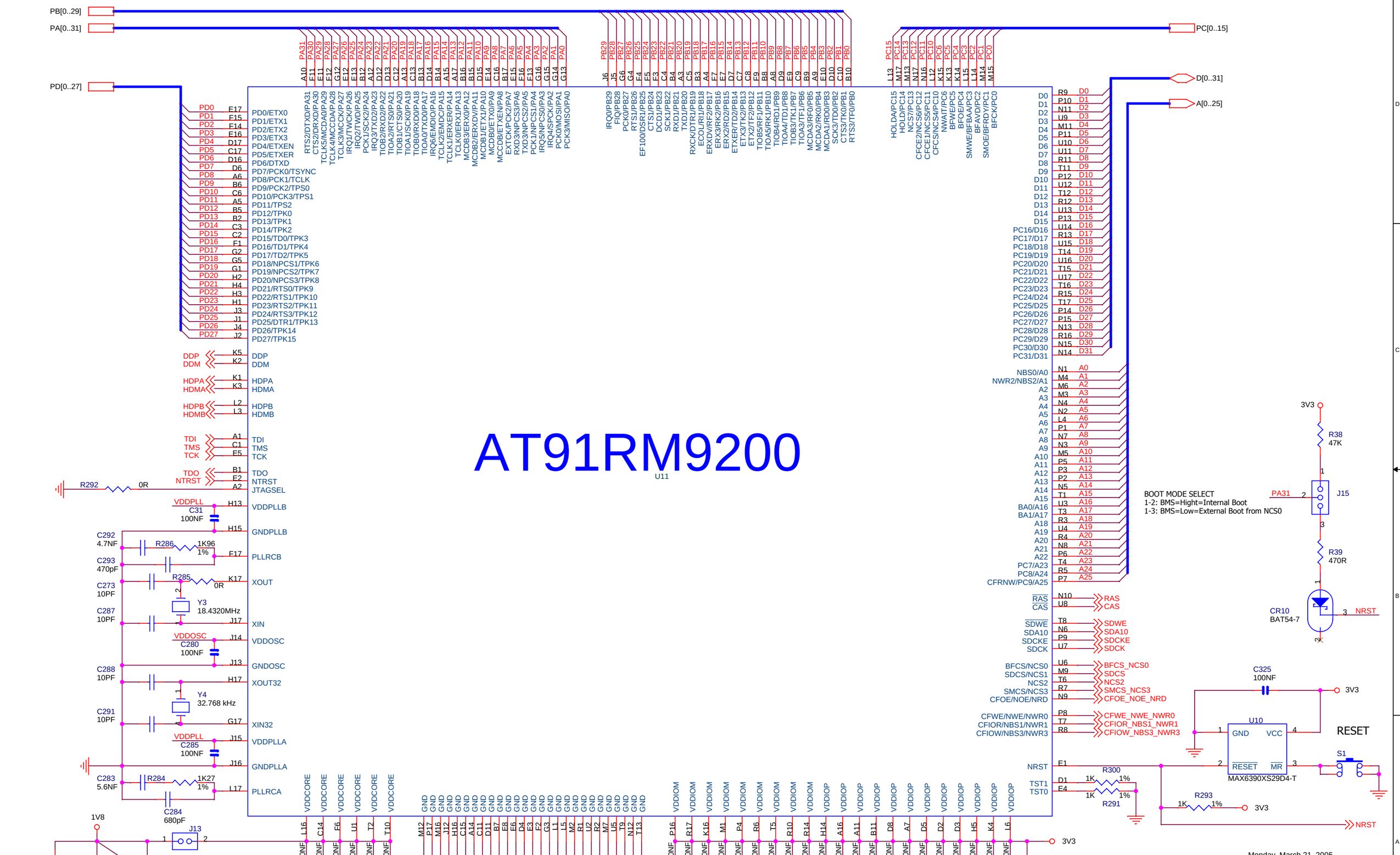

Monday, March 21, 2005

REV	MODIF.	DES.	DATE	VER.	DATE
A01	101-3-05-106	ELX	23/02/05	JPG	23/02/05
A	INIT EDIT	MDZ	04/01/05	JPG	06/01/05

AT91RM9200-EK

AT91RM9200

SCALE 1/1

63SC042261 A01

REV.

SHEET 2/9

This agreement is our property. Reproduction and publication without our written authorization shall expose offender to legal proceedings.

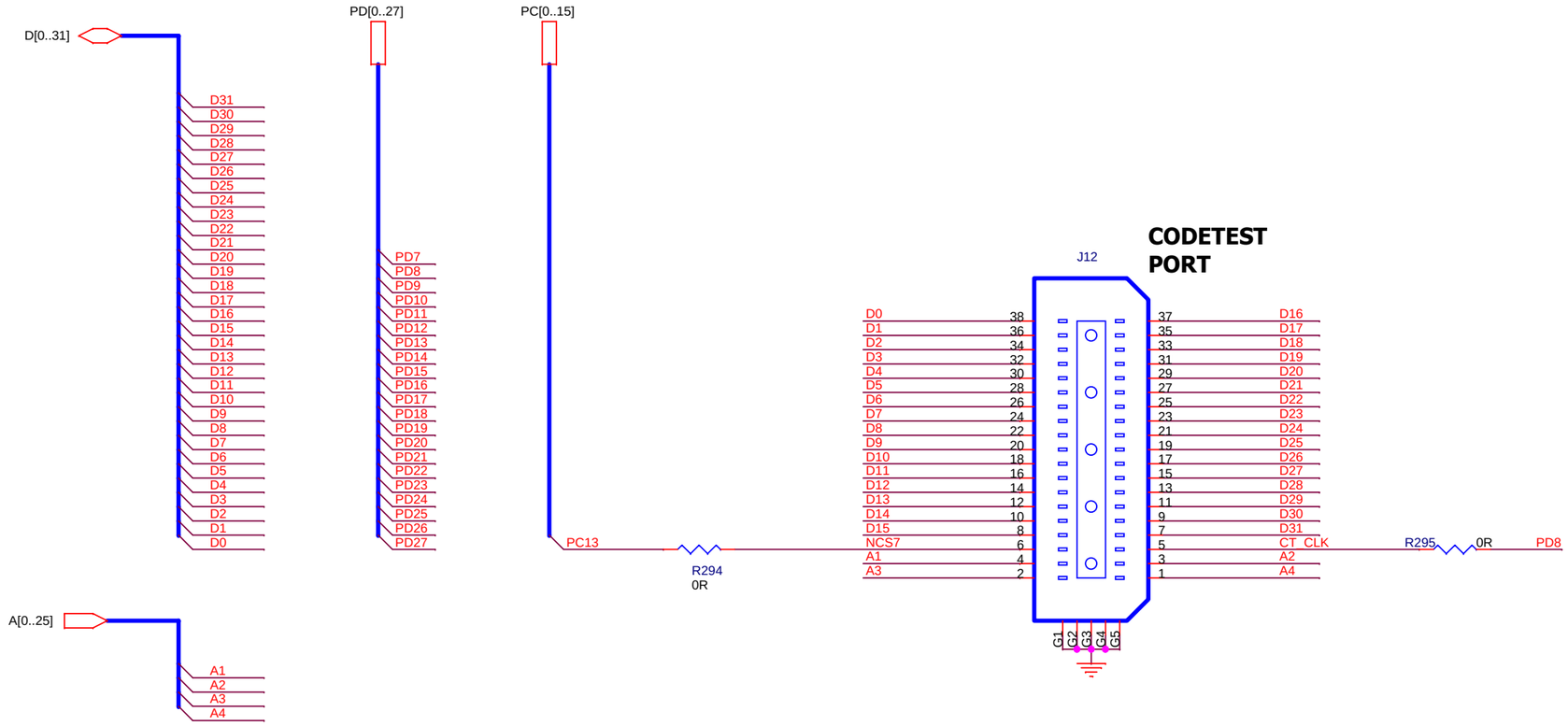

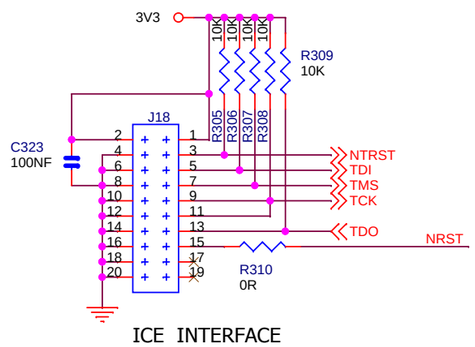

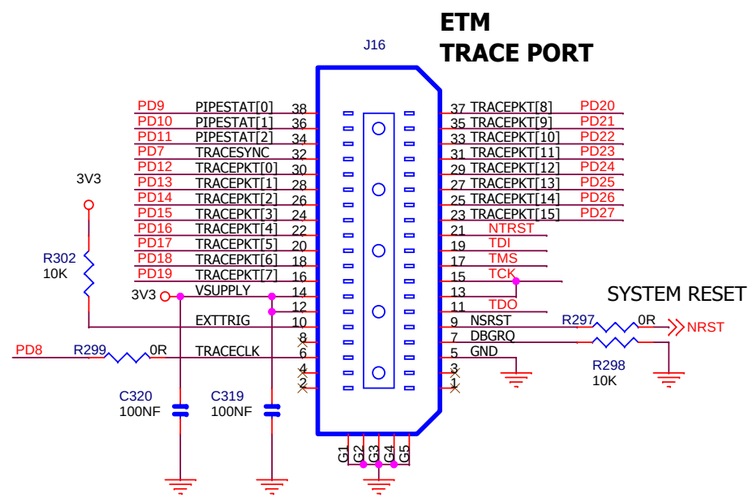

Monday, March 21, 2005

REV	MODIF.	DES.	DATE	VER.	DATE
A01	101-3-05-106	ELX	23/02/05	JPG	23/02/05
A	INIT EDIT	MDZ	04/01/05	JPG	06/01/05

ATMEL ROUSSET

AT91RM9200-EK

ETM - ICE - TEST

SCALE 1/1

REV. A01

SHEET 3/9

63SC042261

This agreement is our property. Reproduction and publication without our written authorization shall expose offender to legal proceedings.

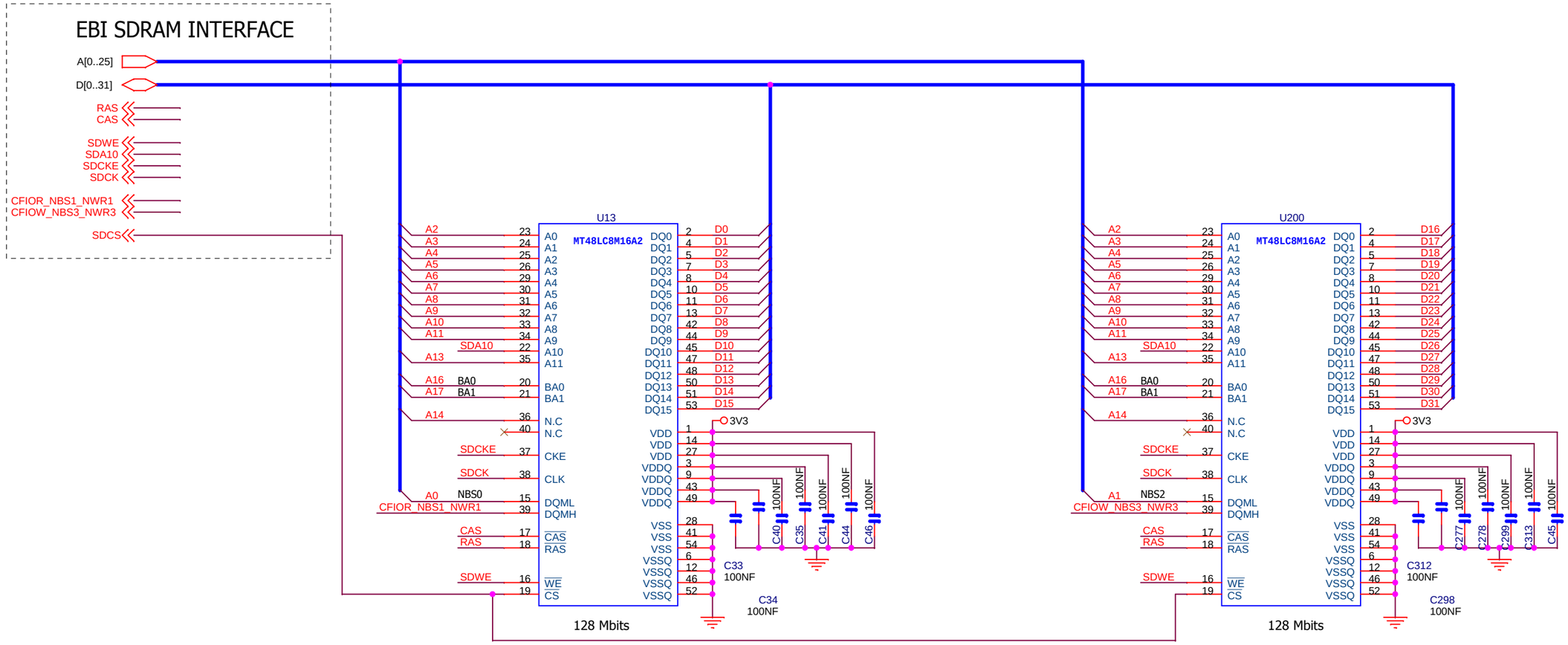

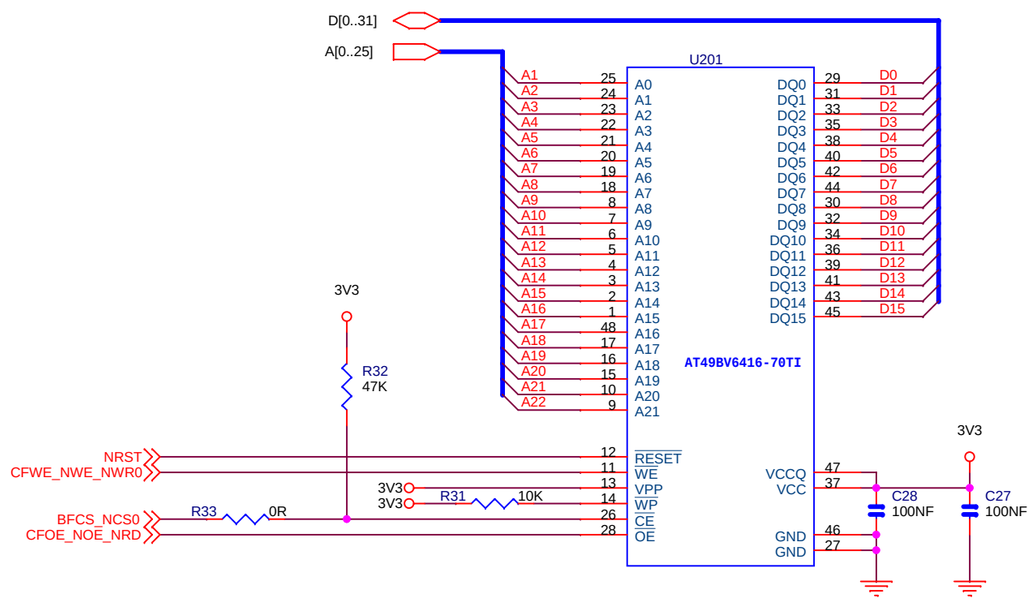

Monday, March 21, 2005

REV	MODIF.	DES.	DATE	VER.	DATE
A01	101-3-05-106	ELX	23/02/05	JPG	23/02/05
A	INIT EDIT	MDZ	04/01/05	JPG	06/01/05

AT91RM9200-EK

SDRAM & FLASH

SCALE 1/1

63SC042261A01

REV. A01

SHEET 4/9

This agreement is our property. Reproduction and publication without our written authorization shall expose offender to legal proceedings.

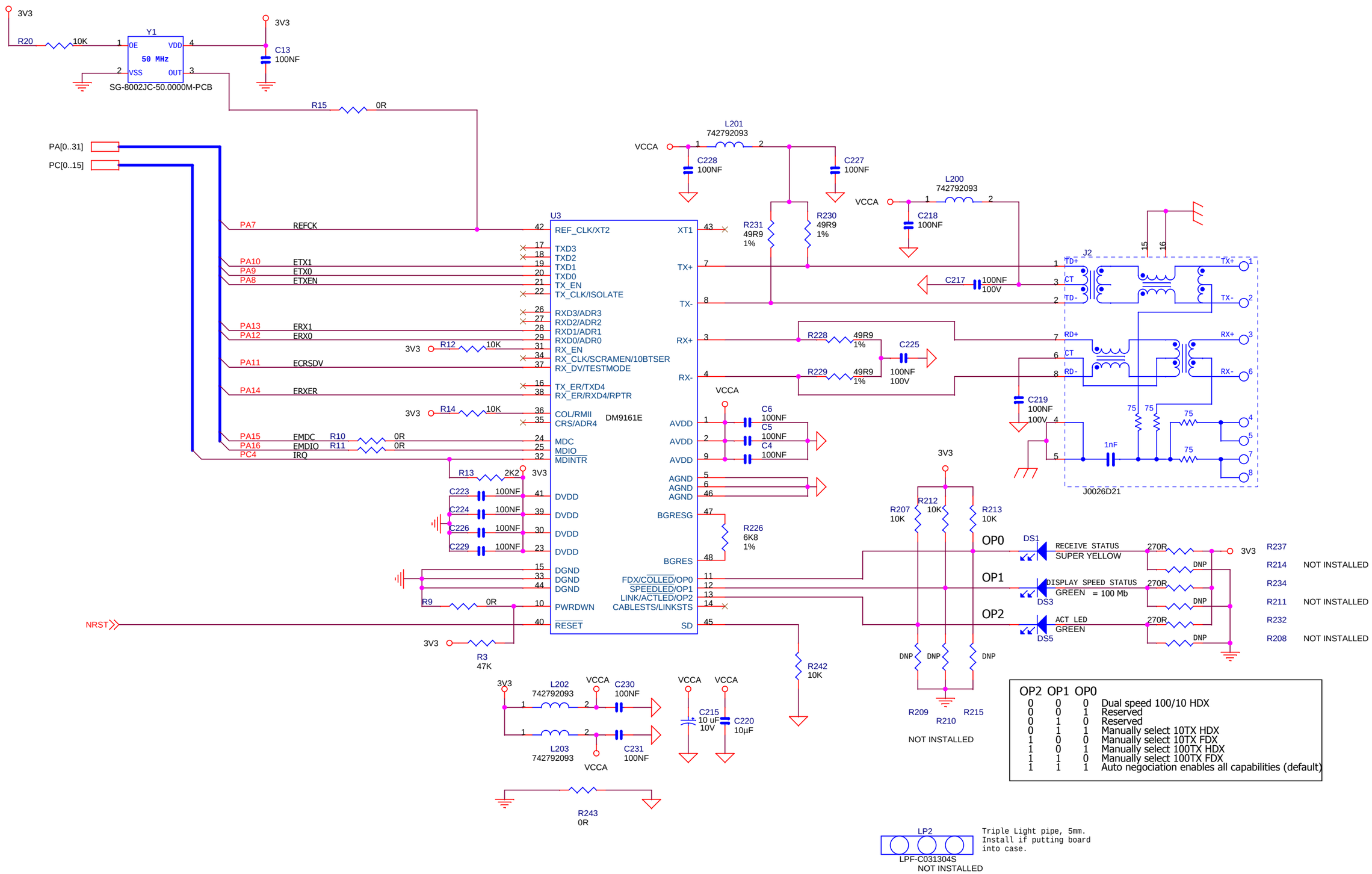

OP2	OP1	OP0	
0	0	0	Dual speed 100/10 HDX
0	0	1	Reserved
0	1	0	Reserved
0	1	1	Manually select 10TX HDX
1	0	0	Manually select 10TX FDX
1	0	1	Manually select 100TX HDX
1	1	0	Manually select 100TX FDX
1	1	1	Auto negociation enables all capabilities (default)

Monday, March 21, 2005

ROUSSET

AT91RM9200-EK

ETHERNET

REV	MODIF.	DES.	DATE	VER.	DATE
A01	101-3-05-106	ELX	23/02/05	JPG	23/02/05
A	INIT EDIT	MDZ	04/01/05	JPG	06/01/05

SCALE 1/1

63SC042261 **A01**

REV. SHEET 5/9

This agreement is our property. Reproduction and publication without our written authorization shall expose offender to legal proceedings.

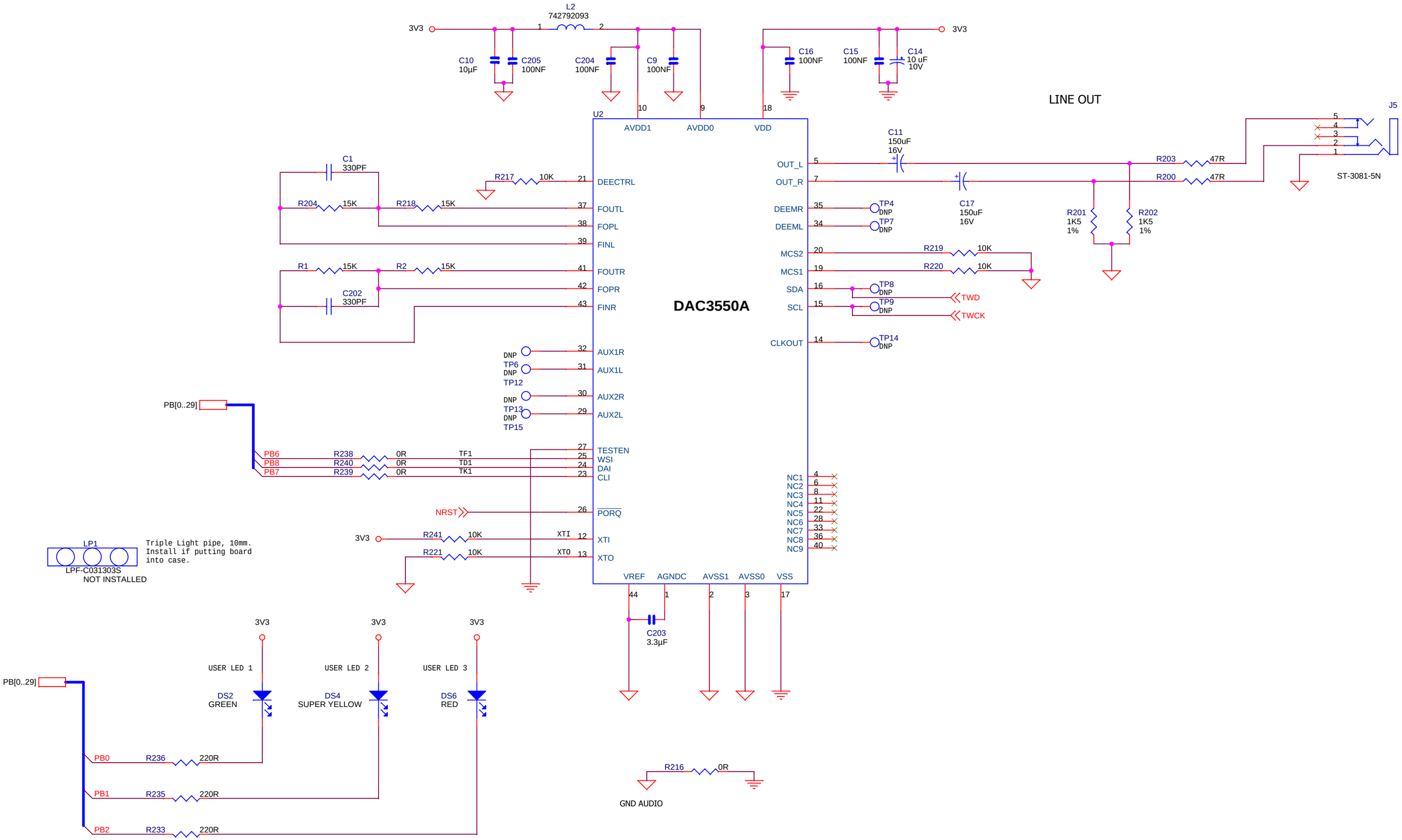

Monday, March 21, 2005

REV	MODIF.	DES.	DATE	VER.	DATE
A01	101-3-05-106	ELX	23/02/05	JPG	23/02/05
A	INIT EDIT	MDZ	04/01/05	JPG	06/01/05

ROUSSET

AT91RM9200-EK

I2S STEREO DAC

SCALE 1/1

REV. A01

SHEET 6/9

63SC042261

This agreement is our property. Reproduction and publication without our written authorization shall expose offender to legal proceedings.

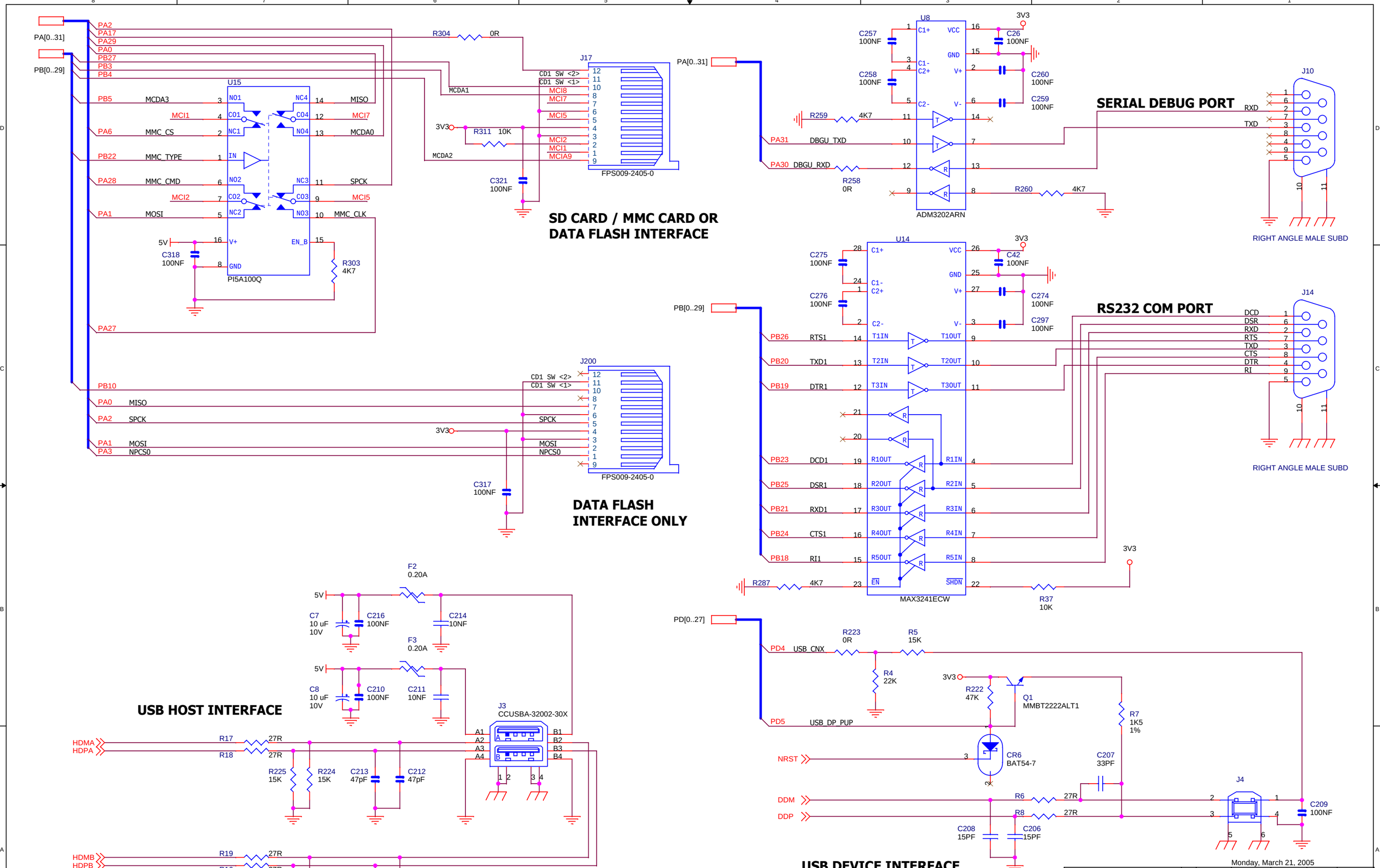
SD CARD / MMC CARD OR DATA FLASH INTERFACE
U15
PI5A100Q
J17
FPS009-2405-0
SERIAL DEBUG PORT
U8
ADM3202ARN
J10
RIGHT ANGLE MALE SUBD
DATA FLASH INTERFACE ONLY
J200
FPS009-2405-0
RS232 COM PORT
U14
MAX3241ECW
J14
RIGHT ANGLE MALE SUBD
USB HOST INTERFACE
J3
CCUSBA-32002-30X
USB DEVICE INTERFACE
J4
Monday, March 21, 2005
AT91RM9200-EK
SERIAL INTERFACES
63SC042261A01
SHEET 7/9

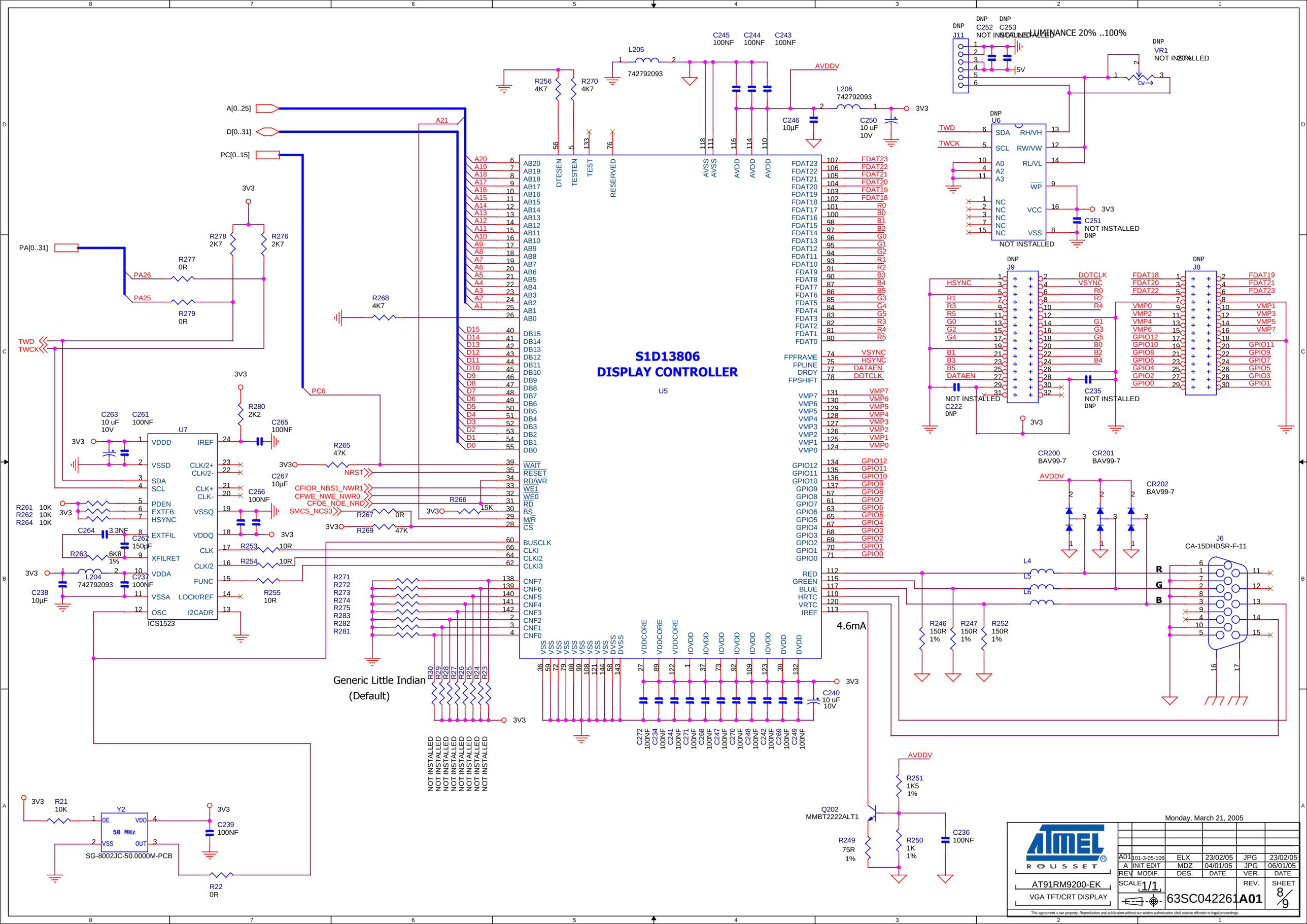
S1D13806
DISPLAY CONTROLLER
U5
ICS1523
U7
SG-8002JC-50.0000M-PCB
Y2
50 MHz
J6
CA-15DHDSR-F-11
J9
J8
J11
U6
LUMINANCE 20% ..100%
VR1
NOT INSTALLED
Generic Little Indian
(Default)
4.6mA
Q202
MMBT2222ALT1
CR200
BAV99-7
CR201
BAV99-7
CR202
BAV99-7
L205
742792093
L206
742792093
L204
742792093
AVDDV
3V3
5V
A[0..25]
D[0..31]
PC[0..15]
PA[0..31]
TWD
TWCK
NRST
CFIOR_NBS1_NWR1
CFWE_NWE_NWR0
CFOE_NOE_NRD
SMCS_NCS3
DOTCLK
VSYNC
HSYNC
DATAEN
Monday, March 21, 2005
AT91RM9200-EK
VGA TFT/CRT DISPLAY
63SC042261A01
SHEET 8/9
SCALE 1/1
This agreement is our property. Reproduction and publication without our written authorization shall expose offender to legal proceedings.

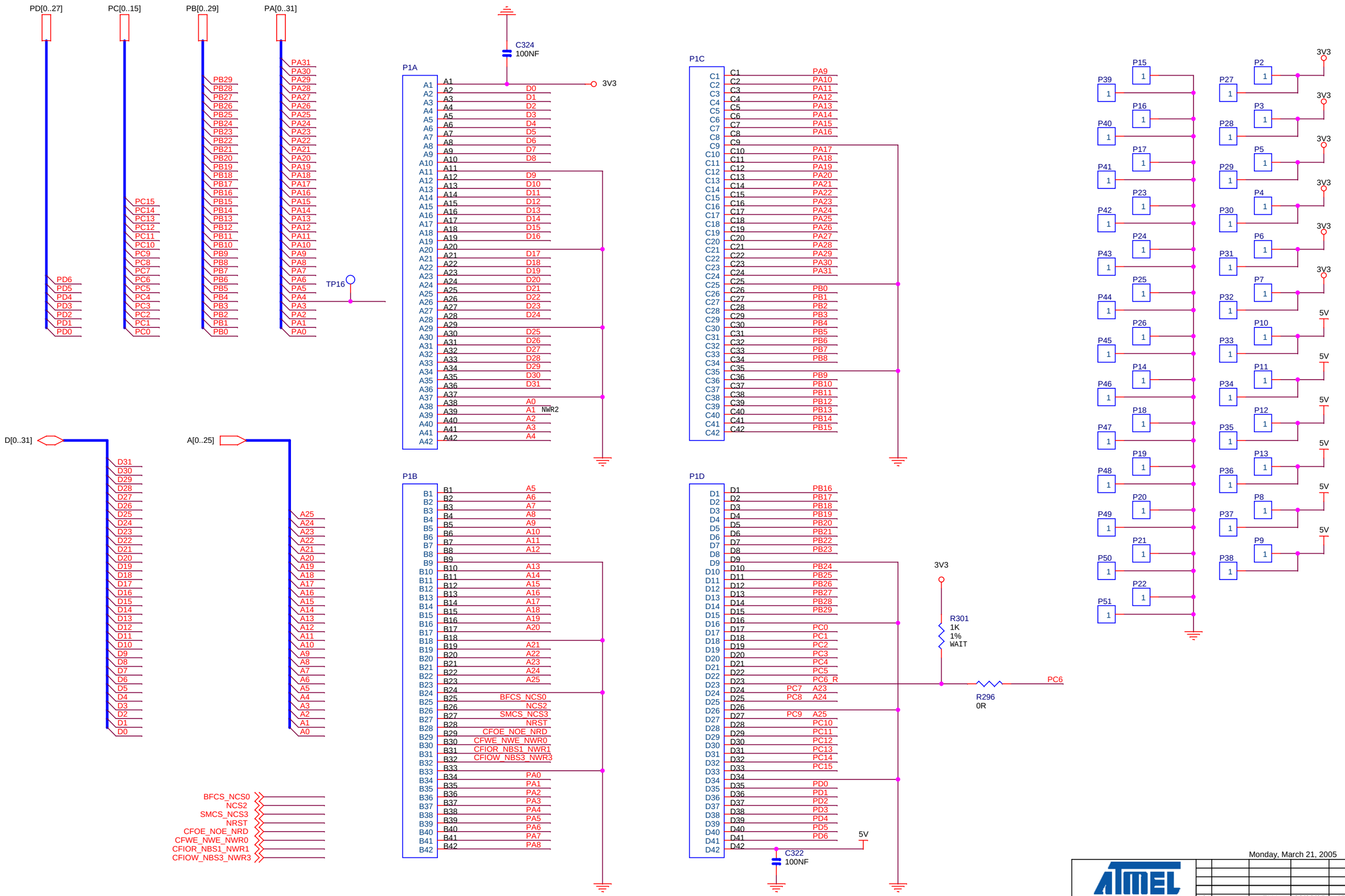

Monday, March 21, 2005

REV	MODIF.	DES.	DATE	VER.	DATE
A01	101-3-05-106	ELX	23/02/05	JPG	23/02/05
A	INIT EDIT	MDZ	04/01/05	JPG	06/01/05

ATMEL ROUSSET

AT91RM9200-EK

EXPANSION CONNECTORS

SCALE 1/1

63SC042261 REV. A01 SHEET 9/9

This agreement is our property. Reproduction and publication without our written authorization shall expose offender to legal proceedings.

Section 6

Errata

6.1 Errata

6.1.1 SD/MMC Card Slot Communication Problem

On the AT91RM9200-EK Board, revision 700-20226 REV X5, a communication problem may occur on the SD/MMC interface.

This issue has been corrected on all boards of revision 63PC042262A by adding a 10 kOhm pull-up resistor between the pin connectors J17-2 and J17-4.

Revision History

Doc. Rev.	Date	Comments	Change Request Ref.
6103A	24-Sep-04	First issue.	
6103B	02-Mar-05 19-Jul-05	Section 1.2, “Deliverables” on page 2; List simplified Table 4-1, Boot information modified New schematics added in Section 5.	CSR 04-361, CSR 05-028, CSR 05-246
6103C	07-Nov-05	Added Section 6, Errata.	CSR 05-478

Atmel Corporation

2325 Orchard Parkway
San Jose, CA 95131, USA
Tel: 1(408) 441-0311
Fax: 1(408) 487-2600

Regional Headquarters

Europe
Atmel Sarl
Route des Arsenaux 41
Case Postale 80
CH-1705 Fribourg
Switzerland
Tel: (41) 26-426-5555
Fax: (41) 26-426-5500

Asia
Room 1219
Chinachem Golden Plaza
77 Mody Road Tsimshatsui
East Kowloon
Hong Kong
Tel: (852) 2721-9778
Fax: (852) 2722-1369

Japan
9F, Tonetsu Shinkawa Bldg.
1-24-8 Shinkawa
Chuo-ku, Tokyo 104-0033
Japan
Tel: (81) 3-3523-3551
Fax: (81) 3-3523-7581

Atmel Operations

Memory
2325 Orchard Parkway
San Jose, CA 95131, USA
Tel: 1(408) 441-0311
Fax: 1(408) 436-4314

Microcontrollers
2325 Orchard Parkway
San Jose, CA 95131, USA
Tel: 1(408) 441-0311
Fax: 1(408) 436-4314

La Chantrerie
BP 70602
44306 Nantes Cedex 3, France
Tel: (33) 2-40-18-18-18
Fax: (33) 2-40-18-19-60

ASIC/ASSP/Smart Cards
Zone Industrielle
13106 Rousset Cedex, France
Tel: (33) 4-42-53-60-00
Fax: (33) 4-42-53-60-01

1150 East Cheyenne Mtn. Blvd.
Colorado Springs, CO 80906, USA
Tel: 1(719) 576-3300
Fax: 1(719) 540-1759

Scottish Enterprise Technology Park
Maxwell Building
East Kilbride G75 0QR, Scotland
Tel: (44) 1355-803-000
Fax: (44) 1355-242-743

RF/Automotive
Theresienstrasse 2
Postfach 3535
74025 Heilbronn, Germany
Tel: (49) 71-31-67-0
Fax: (49) 71-31-67-2340

1150 East Cheyenne Mtn. Blvd.
Colorado Springs, CO 80906, USA
Tel: 1(719) 576-3300
Fax: 1(719) 540-1759

Biometrics/Imaging/Hi-Rel MPU/
High Speed Converters/RF Datacom
Avenue de Rochepleine
BP 123
38521 Saint-Egreve Cedex, France
Tel: (33) 4-76-58-30-00
Fax: (33) 4-76-58-34-80

Literature Requests
www.atmel.com/literature

Disclaimer: The information in this document is provided in connection with Atmel products. No license, express or implied, by estoppel or otherwise, to any intellectual property right is granted by this document or in connection with the sale of Atmel products. **EXCEPT AS SET FORTH IN ATMEL'S TERMS AND CONDITIONS OF SALE LOCATED ON ATMEL'S WEB SITE, ATMEL ASSUMES NO LIABILITY WHATSOEVER AND DISCLAIMS ANY EXPRESS, IMPLIED OR STATUTORY WARRANTY RELATING TO ITS PRODUCTS INCLUDING, BUT NOT LIMITED TO, THE IMPLIED WARRANTY OF MERCHANTABILITY, FITNESS FOR A PARTICULAR PURPOSE, OR NON-INFRINGEMENT. IN NO EVENT SHALL ATMEL BE LIABLE FOR ANY DIRECT, INDIRECT, CONSEQUENTIAL, PUNITIVE, SPECIAL OR INCIDENTAL DAMAGES (INCLUDING, WITHOUT LIMITATION, DAMAGES FOR LOSS OF PROFITS, BUSINESS INTERRUPTION, OR LOSS OF INFORMATION) ARISING OUT OF THE USE OR INABILITY TO USE THIS DOCUMENT, EVEN IF ATMEL HAS BEEN ADVISED OF THE POSSIBILITY OF SUCH DAMAGES.** Atmel makes no representations or warranties with respect to the accuracy or completeness of the contents of this document and reserves the right to make changes to specifications and product descriptions at any time without notice. Atmel does not make any commitment to update the information contained herein. Unless specifically provided otherwise, Atmel products are not suitable for, and shall not be used in, automotive applications. Atmel's products are not intended, authorized, or warranted for use as components in applications intended to support or sustain life.

© Atmel Corporation 2006. **All rights reserved.** Atmel®, logo and combinations thereof, Everywhere You Are®, DataFlash® and others are registered trademarks or trademarks of Atmel Corporation or its subsidiaries. ARM® and the ARMPowered® logo and others are the registered trademarks or trademarks of ARM Ltd. Other terms and product names may be the trademarks of others.

Printed on recycled paper.

6103C–ATARM–05-Jan-06

НИОКР СИСТЕМС

ООО «НИОКРсистемс» - это оперативные поставки широкого спектра электронных компонентов отечественного и импортного производства напрямую от производителей и с крупнейших мировых складов. Реализуемая нашей компанией продукция насчитывает более полумиллиона наименований.

Благодаря этому наша компания предлагает к поставке практически не ограниченный ассортимент компонентов как оптовыми, мелкооптовыми партиями, так и в розницу.

Благодаря развитой сети поставщиков, помогаем в поиске и приобретении экзотичных или снятых с производства компонентов.

Наша компания это:

- Гарантия качества поставляемой продукции
- Широкий ассортимент
- Минимальные сроки поставок
- Техническая поддержка
- Подбор комплектации
- Индивидуальный подход
- Гибкое ценообразование
- Работаем по 275 ФЗ

ООО «НИОКР СИТЕМС»
Москва, 125362, Россия, ул. Вишневая, д. 9, к. 1, Блок 104 а и 104 в

Телефон: 8 (495) 268-14-82
Email: n@nsistems.ru

ИНН: 7735154786
ОГРН: 1167746717709