Low Profile International Transformers
Printed Circuit Mount Encapsulated

BUY DIRECT 24 HOUR PRONTO℠ SHIPMENT
TEL: (516) 239-5777
FAX: (516) 239-7208

Direct Plug-in Replacement for Original FlatHead™Design
Low Profile Transformers

Features and Benefits
- Encapsulated in order to meet harsh environmental conditions
- Rigid pin construction for easier board insertion and higher reliability
- Mounting holes provided for greater resistance to shock and vibration
- Improved electrical characteristics - regulation, temperature rise, efficiency, etc.
- Reduced magnetic radiation

General Specifications
- Power - 2.5 VA to 18 VA
- Dielectric Strength - 4000 Vrms Hipot
- Primaries - Dual primaries, 115/230 V - 50/60Hz
- Secondaries - Series or parallel
- Height - 1.050" to 1.22"
- Insulation System - Class B, 130° C

Agency Certifications
- UL recognized to UL 506 / UL 5085-2, File # E63829
- CSA certified to C22.2 #66.1, File # 221070
- TUV Rheinland Certified IEC / EN 60950, License # 744985

RoHS 2002/95/EC

Part Number	VA	Secondary RMS Rating	
	Size	Series	Parallel
10-250-LPI	2.5	10 VCT @ 250 mA	5V @ 500 mA
12-200-LPI	2.5	12.6VCT@ 200 mA	6.3V@ 400 mA
16-150-LPI	2.5	16 VCT @ 150 mA	8V @ 300 mA
20-125-LPI	2.5	20 VCT @ 125 mA	10V @ 250 mA
24-100-LPI	2.5	24 VCT @ 100 mA	12V @ 200 mA
30-85-LPI	2.5	30 VCT @ 85 mA	15V @ 170 mA
34-75-LPI	2.5	34 VCT @ 75 mA	17V @ 150 mA
40-60-LPI	2.5	40 VCT @ 60 mA	20V @ 120 mA
56-45-LPI	2.5	56 VCT @ 45 mA	28V @ 90 mA
230-10-LPI	2.5	230VCT @ 10 mA	115V@ 20 mA
10-600-LPI	6	10 VCT @ 600 mA	5V @ 1.2 A
12-450-LPI	6	12.6VCT@ 450 mA	6.3V@ 900 mA
16-350-LPI	6	16 VCT @ 350 mA	8V @ 700 mA
20-300-LPI	6	20 VCT @ 300 mA	10V @ 600 mA
24-250-LPI	6	24 VCT @ 250 mA	12V @ 500 mA
30-200-LPI	6	30 VCT @ 200 mA	15V @ 400 mA
34-170-LPI	6	34 VCT @ 170 mA	17V @ 340 mA
40-150-LPI	6	40 VCT @ 150 mA	20V @ 300 mA
56-100-LPI	6	56 VCT @ 100 mA	28V @ 200 mA
230-25-LPI	6	230VCT @ 25 mA	115V@ 50 mA
10-900-LPI	9	10 VCT @ 900 mA	5V @ 1.8 A
12-725-LPI	9	12.6VCT@ 725 mA	6.3V @ 1.45 A
16-560-LPI	9	16 VCT @ 560 mA	8V @ 1.12 A
20-450-LPI	9	20 VCT @ 450 mA	10V @ 900 mA
24-375-LPI	9	24 VCT @ 375 mA	12V @ 750 mA

Part Number	VA	Secondary RMS Rating	
	Size	Series	Parallel
30-300-LPI	9	30 VCT @ 300 mA	15V @ 600 mA
34-265-LPI	9	34 VCT @ 265 mA	17V @ 530 mA
40-225-LPI	9	40 VCT @ 225 mA	20V @ 450 mA
56-160-LPI	9	56 VCT @ 160mA	28V @ 320mA
230-40-LPI	9	230VCT @ 40mA	115V@ 80mA
10-1200-LPI	12	10 VCT @ 1.2 A	5V @ 2.4 A
12-900-LPI	12	12.6VCT @ 900 mA	6.3V @ 1.8 A
16-700-LPI	12	16 VCT @ 700 mA	8V @ 1.4 A
20-600-LPI	12	20 VTC @ 600 mA	10V @ 1.2 A
24-500-LPI	12	24 VCT @ 500 mA	12V @ 1 A
30-400-LPI	12	30 VCT @ 400 mA	15V @ 800 mA
34-340-LPI	12	34 VCT @ 340 mA	17V @ 680 mA
40-300-LPI	12	40 VCT @ 300 mA	20V @ 600 mA
56-200-LPI	12	56 VCT @ 200 mA	28V @ 400 mA
230-50-LPI	12	230VCT @ 50 mA	115V@ 100 mA
10-1800-LPI	18	10 VCT @ 1.8 A	5V @ 3.6 A
12-1500-LPI	18	12.6VCT @ 1.5 A	6.3V @ 3 A
16-1100-LPI	18	16 VCT @ 1.1 A	8V @ 2.2 A
20-900-LPI	18	20 VCT @ 900 mA	10V @ 1.8 A
24-750-LPI	18	24 VCT @ 750 mA	12V @ 1.5 A
30-600-LPI	18	30 VCT @ 600 mA	15V @ 1.2 A
34-500-LPI	18	34 VCT @ 500 mA	17V @ 1 A
40-450-LPI	18	40 VCT @ 450 mA	20V @ 900 mA
56-320-LPI	18	56 VCT @ 320 mA	28V @ 640 mA
230-75-LPI	18	230VCT @ 75 mA	115V@ 150 mA

Custom versions available upon request.

©2008 Signal Transformer — Specification subject to change without notice. 07.08

Signal Transformer
www.signaltransformer.com

500 Bayview Avenue, Inwood, NY 11096
Toll Free 866-239-5777 • Tel 516-239-5777 • Fax 516-239-7208
sales@signaltransformer.com • techhelp@signaltransformer.com

Low Profile International Transformers
Printed Circuit Mount Encapsulated

BUY DIRECT 24 HOUR PRONTO SHIPMENT
TEL: (516) 239-5777
FAX: (516) 239-7208

Direct Plug-in Replacement for Original FlatHead™Design
Low Profile Transformers

RoHS 2002/95/EC

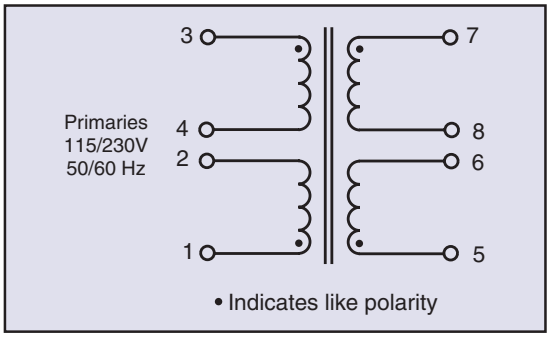

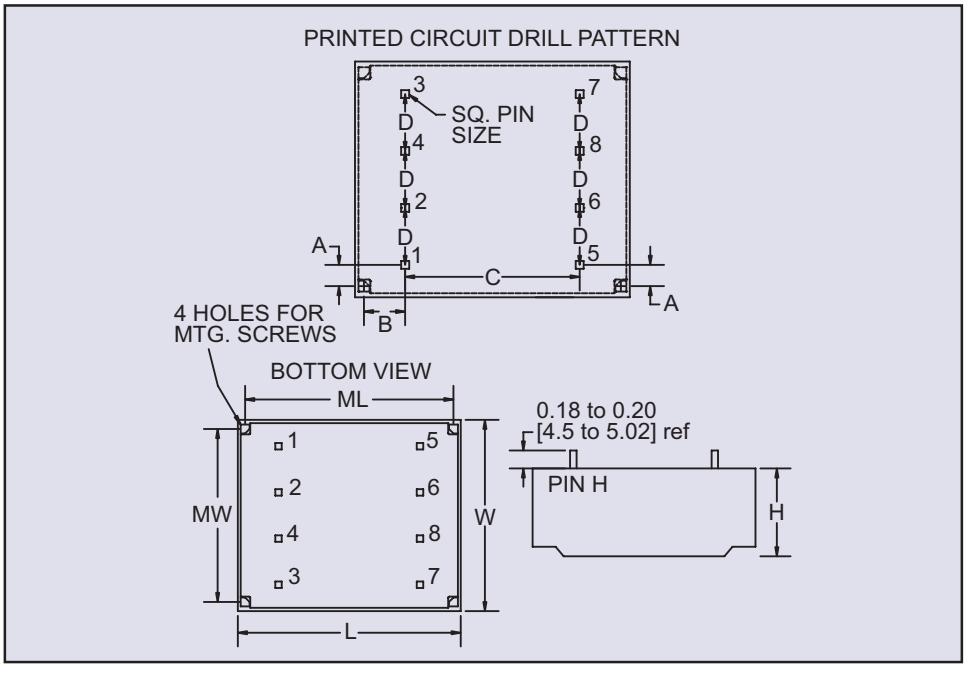

VA	Dimensions									Weight	Self Tap Screw Size	Pin Size
	A	B	C	D	L	W	H	ML	MW			
Size	Inches (mm)									lbs (kg)		Inches (mm)
2.5	0.19 (4.8)	0.29 (7.2)	1.61 (40.9)	0.37 (9.4)	2.37 (60.2)	1.65 (42.1)	0.72 (18.3)	2.19 (55.6)	1.50 (38.1)	0.27 (0.12)	#4	.025 (.635)
6	0.19 (4.8)	0.29 (7.2)	1.61 (40.9)	0.37 (9.4)	2.37 (60.2)	1.65 (42.1)	0.89 (22.7)	2.19 (55.6)	1.50 (38.1)	0.39 (0.17)	#4	.025 (.635)
9	0.19 (4.8)	0.29 (7.2)	1.61 (40.9)	0.37 (9.4)	2.37 (60.2)	1.65 (42.1)	1.08 (27.4)	2.19 (55.6)	1.50 (38.1)	0.51 (0.23)	#4	.025 (.635)
12	0.22 (5.6)	0.20 (5.1)	2.02 (51.3)	0.50 (12.7)	2.63 (66.8)	2.19 (55.6)	1.06 (26.6)	2.38 (60.4)	1.94 (49.2)	0.75 (0.34)	#6	.036 (.914)
18	0.22 (5.6)	0.20 (5.1)	2.02 (51.3)	0.50 (12.7)	2.63 (66.8)	2.19 (55.6)	1.18 (30.0)	2.38 (60.4)	1.94 (49.2)	0.95 (0.43)	#46	.036 (.914)

Custom versions available upon request.

©2008 Signal Transformer — Specification subject to change without notice. 07.08

Signal Transformer
www.signaltransformer.com

500 Bayview Avenue, Inwood, NY 11096
Toll Free 866-239-5777 • Tel 516-239-5777 • Fax 516-239-7208
sales@signaltransformer.com • techhelp@signaltransformer.com

НИОКР СИСТЕМС

ООО «НИОКРсистемс» - это оперативные поставки широкого спектра электронных компонентов отечественного и импортного производства напрямую от производителей и с крупнейших мировых складов. Реализуемая нашей компанией продукция насчитывает более полумиллиона наименований.

Благодаря этому наша компания предлагает к поставке практически не ограниченный ассортимент компонентов как оптовыми, мелкооптовыми партиями, так и в розницу.

Благодаря развитой сети поставщиков, помогаем в поиске и приобретении экзотичных или снятых с производства компонентов.

Наша компания это:

- Гарантия качества поставляемой продукции
- Широкий ассортимент
- Минимальные сроки поставок
- Техническая поддержка
- Подбор комплектации
- Индивидуальный подход
- Гибкое ценообразование
- Работаем по 275 ФЗ

ООО «НИОКР СИТЕМС»
Москва, 125362, Россия, ул. Вишневая, д. 9, к. 1, Блок 104 а и 104 в

Телефон: 8 (495) 268-14-82
Email: n@nsistems.ru

ИНН: 7735154786
ОГРН: 1167746717709