Mixed-Signal Front-End (MxFE™) Processor for Broadband Communications

AD9860/AD9862*

FEATURES

Mixed-Signal Front-End Processor with Dual Converter Receive and Dual Converter Transmit Signal Paths

Receive Signal Path Includes:
- **Two 10-/12-Bit, 64 MSPS Sampling A/D Converters with Internal or External Independent References, Input Buffers, Programmable Gain Amplifiers, Low-Pass Decimation Filters, and a Digital Hilbert Filter**

Transmit Signal Path Includes:
- **Two 12-/14-Bit, 128 MSPS D/A Converters with Programmable Full-Scale Output Current, Channel Independent Fine Gain and Offset Control, Digital Hilbert and Interpolation Filters, and Digitally Tunable Real or Complex Up-Converters**

Delay-Locked Loop Clock Multiplier and Integrated Timing Generation Circuitry Allow for Single Crystal or Clock Operation

Programmable Output Clocks, Serial Programmable Interface, Programmable Sigma-Delta, Three Auxiliary DAC Outputs and Two Auxiliary ADCs with Dual Multiplexed Inputs

APPLICATIONS

Broadband Wireless Systems
- **Fixed Wireless, WLAN, MMDS, LMDS**

Broadband Wireline Systems
- **Cable Modems, VDSL, PowerPlug**

Digital Communications
- **Set-Top Boxes, Data Modems**

FUNCTIONAL BLOCK DIAGRAM

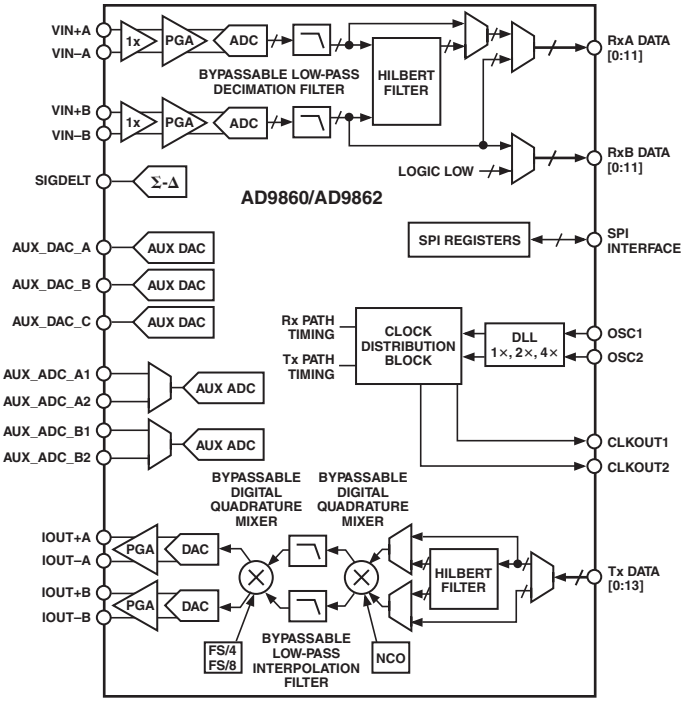

GENERAL DESCRIPTION

The AD9860 and AD9862 (AD9860/AD9862) are versatile integrated mixed-signal front-ends (MxFE) that are optimized for broadband communication markets. The AD9860/AD9862 are cost effective, mixed signal solutions for wireless or wireline standards based or proprietary broadband modem systems where dynamic performance, power dissipation, cost, and size are all critical attributes. The AD9860 has 10-bit ADCs and 12-bit DACs; the AD9862 has 12-bit ADCs and 14-bit DACs.

The AD9860/AD9862 receive path (Rx) consists of two channels that each include a high performance, 10-/12-bit, 64 MSPS analog-to-digital converter (ADC), input buffer, Programmable Gain Amplifier (RxPGA), digital Hilbert filter, and decimation filter. The Rx can be used to receive real, diversity, or I/Q data at baseband or low IF. The input buffers provide a constant input impedance for both channels to ease impedance matching with external components (e.g., SAW filter). The RxPGA provides a 20 dB gain range for both channels. The output data bus can be multiplexed to accommodate a variety of interface types.

The AD9860/AD9862 transmit path (Tx) consists of two channels that contain high performance, 12-/14-bit, 128 MSPS digital-to-analog converters (DAC), programmable gain amplifiers (TxPGA), interpolation filters, a Hilbert filter, and digital mixers for complex or real signal frequency modulation. The Tx latch and demultiplexer circuitry can process real or I/Q data. Interpolation rates of 2× and 4× are available to ease requirements on an external reconstruction filter. For single channel systems, the digital Hilbert filter can be used with an external quadrature modulator to create an image rejection architecture. The two 12-/14-bit, high performance DACs produce an output signal that can be scaled over a 20 dB range by the TxPGA.

A programmable delay-locked loop (DLL) clock multiplier and integrated timing circuits enable the use of a single external reference clock or an external crystal to generate clocking for all internal blocks and also provides two external clock outputs. Additional features include a programmable sigma-delta output, four auxiliary ADC inputs and three auxiliary DAC outputs. Device programmability is facilitated by a serial port interface (SPI) combined with a register bank. The AD9860/AD9862 is available in a space saving 128-lead LQFP.

*Protected by U.S.Patent No. 5,969,657; other patents pending.
MxFE is a trademark of Analog Devices, Inc.

REV. 0

Information furnished by Analog Devices is believed to be accurate and reliable. However, no responsibility is assumed by Analog Devices for its use, nor for any infringements of patents or other rights of third parties that may result from its use. No license is granted by implication or otherwise under any patent or patent rights of Analog Devices.

One Technology Way, P.O. Box 9106, Norwood, MA 02062-9106, U.S.A.
Tel: 781/329-4700 **www.analog.com**
Fax: 781/326-8703
© Analog Devices, Inc., 2002

AD9860/AD9862–SPECIFICATIONS

(V_A = 3.3 V ± 5%, V_D = 3.3 V ± 10%, f_{DAC} = 128 MHz, f_{ADC} = 64 MHz Normal Timing Mode, 2× DLL Setting, R_{SET} = 4 kΩ, 50 Ω DAC Load, RxPGA = +6 dB Gain, TxPGA = +20 dB Gain.)

Tx PARAMETERS	Temp	Test Level	AD9860/AD9862 Min	Typ	Max	Unit
12-/14-BIT DAC CHARACTERISTICS						
Resolution	NA	NA		12/14		Bits
Maximum Update Rate			128			MSPS
Full-Scale Output Current	Full	I	2		20	mA
Gain Error (Using Internal Reference)	25°C	I	–5.5	+0.5	+5.5	%FS
Offset Error	25°C	I	–1	0.0	+1	%FS
Reference Voltage (REFIO Level)	25°C	I	1.15	1.22	1.28	V
Negative Differential Nonlinearity (–DNL)	25°C	III		–0.5/–0.5		LSB
Positive Differential Nonlinearity (+DNL)	25°C	III		1/2		LSB
Integral Nonlinearity (INL)	25°C	III		±1/±3		LSB
Output Capacitance	25°C	III		5		pF
Phase Noise @ 1 kHz Offset, 6 MHz Tone						
Crystal and OSC IN Multiplier Enabled at 4×	25°C	III		–115		dBc/Hz
Output Voltage Compliance Range	Full	II	–0.5		+1.5	V
TRANSMIT TxPGA CHARACTERISTICS						
Gain Range	25°C	III		20		dB
Step Size Accuracy	25°C	III		±0.1		dB
Step Size	25°C	III		0.08		dB
Tx DIGITAL FILTER CHARACTERISTICS						
Hilbert Filter Pass Band (<0.1 dB Ripple)	Full	II	12.5		38	% f_{DATA}[1]
2×/4× Interpolator Stop Band[2]	Full	II			±38	% f_{DATA}
DYNAMIC PERFORMANCE (A_{OUT} = 20 mA FS, f = 1 MHz)						
Differential Phase	25°C	III		<0.1		Degree
Differential Gain	25°C	III		<1		LSB
AD9860 Signal-to-Noise Ratio (SNR)	Full	I	68.2	70.7		dB
AD9860 Signal-to-Noise and Distortion Ratio	Full	I	62.5	66.1		dB
AD9860 Total Harmonic Distortion (THD)	Full	I		–74.5	–64.0	dB
AD9860 Wideband SFDR (to Nyquist)						
1 MHz Analog Out, I_{OUT} = 2 mA	25°C	III		70.6		dBc
1 MHz Analog Out, I_{OUT} = 20 mA	25°C	I	64.4	75		dBc
6 MHz Analog Out, I_{OUT} = 20 mA	25°C	III		75		dBc
AD9860 Narrowband SFDR (1 MHz Window)						
1 MHz Analog Out, I_{OUT} = 2 mA	25°C	III		70.2		dBc
1 MHz Analog Out, I_{OUT} = 20 mA	25°C	I	83	90		dBc
AD9862 Signal-to-Noise Ratio (SNR)	Full	I	68.9	72.0		dB
AD9862 Signal-to-Noise and Distortion Ratio	Full	I	64.75	69.8		dB
AD9862 Total Harmonic Distortion (THD)	Full	I		–75.5	–65.0	dB
AD9862 Wideband SFDR (to Nyquist)						
1 MHz Analog Out, I_{OUT} = 2 mA	25°C	III		70.6		dBc
1 MHz Analog Out, I_{OUT} = 20 mA	25°C	I	64.9	76.0		dBc
6 MHz Analog Out, I_{OUT} = 20 mA	25°C	III		76.0		dBc
AD9862 Narrowband SFDR (1 MHz Window)						
1 MHz Analog Out, I_{OUT} = 2 mA	25°C	III		70.2		dBc
1 MHz Analog Out, I_{OUT} = 20 mA	25°C	I	83	90		dBc
Rx PARAMETERS						
RECEIVE BUFFER						
Input Resistance (Differential)	Full	III		200		Ω
Input Capacitance (Each Input)	Full	III		5		pF
Maximum Input Bandwidth (–3 dB)	Full	III		140		MHz
Analog Input Range (Best Noise Performance)	Full	II		2		V p-p Diff
Analog Input Range (Best THD Performance)	Full	II		1		V p-p Diff
RECEIVE PGA CHARACTERISTICS						
Gain Error	25°C	I		±0.3		dB
Gain Range	25°C	I	19	20	21	dB
Step Size Accuracy	25°C	I		±0.2		dB
Step Size	25°C	I		1		dB
Input Bandwidth (–3 dB, Rx Buffer Bypassed)	25°C	III		250		MHz
10-/12-BIT ADC CHARACTERISTICS						
Resolution	NA	NA		10/12		Bits
Maximum Conversion Rate	Full	I	64			MHz

Rx PARAMETERS (continued)	Temp	Test Level	AD9860/AD9862 Min	Typ	Max	Unit
DC ACCURACY						
Differential Nonlinearity	25°C	III		±0.3/±0.4		LSB
Integral Nonlinearity	25°C	III		±1.2/±5		LSB
Offset Error	25°C	III		±0.1		%FSR
Gain Error	25°C	III		±0.2		%FSR
Aperture Delay	25°C	III		2.0		ns
Aperture Uncertainty (Jitter)	25°C	III		1.2		ps rms
Input Referred Noise	25°C	III		250		µV
Reference Voltage Error						
REFT-REFB Error (1 V)	25°C	I		±1	±4	mV
AD9860 DYNAMIC PERFORMANCE (A_{IN} = –0.5 dBFS, f = 5 MHz)						
Signal-to-Noise Ratio	25°C	I	59.0	60.66		dBc
Signal-to-Noise and Distortion Ratio	25°C	I	56.0	58.0		dBc
Total Harmonic Distortion	25°C	I		–76.5	–70.5	dBc
Spurious Free Dynamic Range	25°C	I	70.3	81.0		dBc
AD9862 DYNAMIC PERFORMANCE (A_{IN} = –0.5 dBFS, f = 5 MHz)						
Signal-to-Noise Ratio	25°C	I	62.6	64.2		dBc
Signal-to-Noise and Distortion Ratio	25°C	I	62.5	64.14		dBc
Total Harmonic Distortion	25°C	I		–79.22	–73.2	dBc
Spurious Free Dynamic Range	25°C	I	77.09	85.13		dBc
CHANNEL-TO-CHANNEL ISOLATION						
Tx-to-Rx (A_{OUT} = 0 dBFS, f_{OUT} = 7 MHz)	25°C	III		>90		dB
Rx Channel Crosstalk (f_1 = 6 MHz, f_2 = 9 MHz)	25°C	III		>80		dB
PARAMETERS						
CMOS LOGIC INPUTS						
Logic "1" Voltage, V_{IH}	25°C	II	DRVDD – 0.7			V
Logic "0" Voltage, V_{IL}	25°C	II			0.4	V
Logic "1" Current	25°C	II			12	µA
Logic "0" Current	25°C	II			12	µA
Input Capacitance	25°C	III		3		pF
CMOS LOGIC OUTPUTS (1 mA Load)						
Logic "1" Voltage, V_{OH}	25°C	II	DRVDD – 0.6			V
Logic "0" Voltage, V_{OL}	25°C	II			0.4	V
POWER SUPPLY						
Analog Supply Currents						
Tx (Both Channels, 20 mA FS Output)	25°C	I		70	76	mA
Tx Powered Down	25°C	I		2.5	5.0	mA
Rx (Both Channels, Input Buffer Enabled)	25°C	I		275	307	mA
Rx (Both Channels, Input Buffer Disabled)	25°C	III		245		mA
Rx (32 MSPS, Low Power Mode, Buffer Disabled)	25°C	III		155		mA
Rx (16 MSPS, Low Power Mode, Buffer Disabled)	25°C	III		80		mA
Rx Path Powered Down	25°C	I		5.0	6.0	mA
DLL	25°C	III		12		mA
Digital Supply Current						
AD9860 Both Rx and Tx Path (All Channels Enabled)						
2× Interpolation, f_{DAC} = f_{ADC} = 64 MSPS	25°C	I		92	112	mA
AD9862 Both Rx and Tx Path (All Channels Enabled)						
2× Interpolation, f_{DAC} = f_{ADC} = 64 MSPS	25°C	I		104	124	mA
Tx Path (f_{DAC} = 128 MSPS)						
Processing Blocks Disabled	25°C	III		45		mA
4× Interpolation	25°C	III		90		mA
4× Interpolation, Coarse Modulation	25°C	III		110		mA
4× Interpolation, Fine Modulation	25°C	III		110		mA
4× Interpolation, Coarse and Fine Modulation	25°C	III		130		mA

PARAMETERS (continued)	Temp	Test Level	AD9860/AD9862 Min	Typ	Max	Unit
POWER SUPPLY (continued)						
Rx Path (f_{ADC} = 64 MSPS)						
Processing Blocks Disabled	25°C	III		9		mA
Decimation Filter Enabled	25°C	III		15		mA
Hilbert Filter Enabled	25°C	III		16		mA
Hilbert and Decimation Filter Enabled	25°C	III		18.5		mA

NOTES
[1]% f_{DATA} refers to the input data rate of the digital block.
[2]Interpolation filter stop band is defined by image suppression of 50 dB or greater.

Specifications subject to change without notice.

TIMING CHARACTERISTICS

(20 pF Load)	Temp	Test Level	AD9860/AD9862 Min	Typ	Max	Unit
Minimum Reset Pulsewidth Low (t_{RL})	NA	NA	5			Clock Cycles
Digital Output Rise/Fall Time	25°C	III	2.8		4	ns
DLL Output Clock	25°C	III	32		128	MHz
DLL Output Duty Cycle	25°C	III		50		%
Tx–/Rx–Interface (See Figures 11 and 12)						
TxSYNC/TxIQ Setup Time (t_{Tx1}, t_{Tx3})	25°C	III	3			ns
TxSYNC/TxIQ Hold Time (t_{Tx2}, t_{Tx4})	25°C	III	3			ns
RxSYNC/RxIQ/IF to Valid Time(t_{Rx1}, t_{Rx3})	25°C	III			5.2	ns
RxSYNC/RxIQ/IF Hold Time (t_{Rx2}, t_{Rx4})	25°C	III	0.2			ns
Serial Control Bus (See Figures 1 and 2)						
Maximum SCLK Frequency (f_{SCLK})	Full	III			16	MHz
Minimum Clock Pulsewidth High (t_{HI})	Full	III	30			ns
Minimum Clock Pulsewidth Low (t_{LOW})	Full	III	30			ns
Maximum Clock Rise/Fall Time	Full	III			1	ms
Minimum Data/SEN Setup Time (t_S)	Full	III	25			ns
Minimum SEN/Data Hold Time (t_H)	Full	III	0			ns
Minimum Data/SCLK Setup Time (t_{DS})	Full	III	25			ns
Minimum Data Hold Time (t_{DH})	Full	III	0			ns
Output Data Valid/SCLK Time (t_{DV})	Full	III			30	ns
AUXILARY ADC						
Conversion Rate	25°C	III		1.25		MHz
Input Range	25°C	III		3		V
Resolution	25°C	III		10		Bits
AUXILARY DAC						
Settling Time	25°C	III		8		µs
Output Range	25°C	III		3		V
Resolution	25°C	III		8		Bits
ADC TIMING						
Latency (All Digital Processing Blocks Disabled)	25°C	III		7		Cycles
DAC Timing						
Latency (All Digital Processing Blocks Disabled)	25°C	III		3		Cycles
Latency (2× Interpolation Enabled)	25°C	III		30		Cycles
Latency (4× Interpolation Enabled)	25°C	III		72		Cycles
Additional Latency (Hilbert Filter Enabled)	25°C	III		36		Cycles
Additional Latency (Coarse Modulation Enabled)	25°C	III		5		Cycles
Additional Latency (Fine Modulation Enabled)	25°C	III		8		Cycles
Output Settling Time (TST) (to 0.1%)	25°C	III		35		ns

Specifications subject to change without notice.

ABSOLUTE MAXIMUM RATINGS[1]

Power Supply (V_{AS}, V_{DS}) . . . . . 3.9 V
Digital Output Current . . . . . 5 mA
Digital Inputs . . . . . –0.3 V to DRVDD + 0.3 V
Analog Inputs . . . . . –0.3 V to AVDD (IQ) + 0.3 V
Operating Temperature[2] . . . . . –40°C to +70°C
Maximum Junction Temperature . . . . . 150°C
Storage Temperature . . . . . –65°C to +150°C
Lead Temperature (Soldering 10 sec) . . . . . 300°C

NOTES
[1]Absolute maximum ratings are limiting values, to be applied individually, and beyond which the serviceability of the circuit may be impaired. Functional operability under any of these conditions is not necessarily implied. Exposure to absolute maximum rating conditions for extended periods of time may affect device reliability.
[2]The AD9860/AD9862 have been characterized to operate over the industrial temperature range (–40°C to +85°C) when operated in Half Duplex Mode.

EXPLANATION OF TEST LEVELS

I. Devices are 100% production tested at 25°C and guaranteed by design and characterization testing for the extended industrial temperature range (–40°C to +70°C).

II. Parameter is guaranteed by design and/or characterization testing.

III. Parameter is a typical value only.

NA. Test level definition is not applicable.

THERMAL CHARACTERISTICS

Thermal Resistance
128-Lead LQFP θ_{JA} = 29°C/W

ORDERING GUIDE

Model	Temperature Range	Package Description	Package Option
AD9860BST	–40°C to +70°C*	128-Lead Low Profile Plastic Quad Flatpack (LQFP)	ST-128B
AD9862BST	–40°C to +70°C*	128-Lead Low Profile Plastic Quad Flatpack (LQFP)	ST-128B
AD9860PCB		Evaluation Board with AD9860	
AD9862PCB		Evaluation Board with AD9862	

*The AD9860/AD9862 have been characterized to operate over the industrial temperature range (–40°C to +85°C) when operated in Half Duplex Mode.

CAUTION

ESD (electrostatic discharge) sensitive device. Electrostatic charges as high as 4000 V readily accumulate on the human body and test equipment and can discharge without detection. Although the AD9860/AD9862 features proprietary ESD protection circuitry, permanent damage may occur on devices subjected to high energy electrostatic discharges. Therefore, proper ESD precautions are recommended to avoid performance degradation or loss of functionality.

PIN CONFIGURATION

NC = NO CONNECT

PIN FUNCTION DESCRIPTIONS

Pin No.	Mnemonic	Function
	Receive Pins	
68/70–79	D0A to D9A/D11A	10-/12-Bit ADC Output of Receive Channel A
80/82–91	D0B to D9B/D11B	10-/12-Bit ADC Output of Receive Channel B
92	RxSYNC	Synchronization Clock for Channel A and Channel B Rx Paths
98, 99, 104, 105, 117, 118, 123, 124,	AVDD	Analog Supply Pins
100, 103, 106, 109, 110, 112, 113, 116, 119, 122,	AGND	Analog Ground Pins
101	REFT_B	Top Reference Decoupling for Channel B ADC
102	REFB_B	Bottom Reference Decoupling for Channel B ADC
107	VIN+B	Receive Channel B Differential (+) Input
108	VIN–B	Receive Channel B Differential (–) Input
111	VREF	Internal ADC Voltage Reference
114	VIN–A	Receive Channel A Differential (–) Input
115	VIN+A	Receive Channel A Differential (+) Input
120	REFB_A	Bottom Reference Decoupling for Channel A ADC
121	REFT_A	Top Reference Decoupling for Channel A ADC
	Transmit Pins	
18, 20 23, 32	AVDD	Analog Supply Pins
19, 24, 27, 28, 31	AGND	Analog Ground Pins
21	REFIO	Reference Output, 1.2 V Nominal
22	FSADJ	Full-Scale Current Adjust
25	IOUT–A	Transmit Channel A DAC Differential (–) Output
26	IOUT+A	Transmit Channel A DAC Differential (+) Output
29	IOUT+B	Transmit Channel B DAC Differential (+) Output
30	IOUT–B	Transmit Channel B DAC Differential (–) Output
37–48/50	Tx11/Tx13 to Tx0	12-/14-Bit Transmit DAC Data (Interleaved Data when Required)
51	TxSYNC	Synchronization Input for Transmitter
62	MODE/ TxBLANK*	Configures Default Timing Mode, Controls Tx Digital Power Down

*The logic level of the Mode/TxBLANK pin at power up defines the default timing mode; a logic low configures Normal Operation, logic high configures Alternate Operation Mode.

Pin No.	Mnemonic	Function
	Clock Pins	
10	DLL_Lock	DLL Lock Indicator Pin
11, 16	AGND	DLL Analog Ground Pins
12	NC	No Connect
13	AVDD	DLL Analog Supply Pin
14	OSC1	Single Ended Input Clock (or Crystal Oscillator Input)
15	OSC2	Crystal Oscillator Input
17	CLKSEL	Controls CLKOUT1 Rate
64	CLKOUT2	Clock Output Generated from Input Clock (DLL Multiplier Setting and CLKOUT2 Divide Factor)
65	CLKOUT1	Clock Output Generated from Input Clock (1× if CLKSEL = 1 or /2 if CLKSEL = 0)
	Various Pins	
1	AUX_ADC_A1	Auxiliary ADC A Input 1
3, 4, 13	AVDD	Analog Power Pins
2, 9	AGND	Analog Ground Pins
5	SIGDELT	Digital Output from Programmable Sigma-Delta
6	AUX_DAC_A	Auxiliary DAC A Output
7	AUX_DAC_B	Auxiliary DAC B Output
8	AUX_DAC_C	Auxiliary DAC C Output
33, 36, 53, 59, 61, 66, 93	DVDD	Digital Power Supply Pin
34, 35, 52, 58, 60, 67, 94	DGND	Digital Ground Pin
54	SCLK	Serial Bus Clock Input
55	SDO	Serial Bus Data Bit
56	SDIO	Serial Bus Data Bit
57	SEN	Serial Bus Enable
63	RESETB	Reset (SPI Registers and Logic)
95	AUX_SPI_do	Optional Auxiliary ADC Serial Bus Data Out Bit
96	AUX_SPI_clk	Optional Auxiliary ADC Serial Bus Data Out Latch Clock
97	AUX_SPI_csb	Optional Auxiliary ADC Serial Bus Chip Select Bit
128	AUX_ADC_A2	Auxiliary ADC A Input 2
126	AUX_ADC_B1	Auxiliary ADC B Input 1
125	AUX_ADC_B2	Auxiliary ADC B Input 2
127	AUX_ADC_REF	Auxiliary ADC Reference

DEFINITIONS OF SPECIFICATIONS

Differential Nonlinearity Error (DNL, No Missing Codes)
An ideal converter exhibits code transitions that are exactly 1 LSB apart. DNL is the deviation from this ideal value. Guaranteed no missing codes to 10-bit resolution indicate that all 1024 codes respectively, must be present over all operating ranges.

Integral Nonlinearity Error (INL)
Linearity error refers to the deviation of each individual code from a line drawn from "negative full scale" through "positive full scale." The point used as "negative full scale" occurs 1/2 LSB before the first code transition. "Positive full scale" is defined as a level 1 1/2 LSB beyond the last code transition. The deviation is measured from the middle of each particular code to the true straight line.

Phase Noise
Single-sideband phase noise power is specified relative to the carrier (dBc/Hz) at a given frequency offset (1 kHz) from the carrier. Phase noise can be measured directly in Single Tone Transmit Mode with a spectrum analyzer that supports noise marker measurements. It detects the relative power between the carrier and the offset (1 kHz) sideband noise and takes the resolution bandwidth (rbw) into account by subtracting 10 log(rbw). It also adds a correction factor that compensates for the implementation of the resolution bandwidth, log display, and detector characteristic.

Output Compliance Range
The range of allowable voltage at the output of a current-output DAC. Operation beyond the maximum compliance limits may cause either output stage saturation or breakdown, resulting in nonlinear performance.

Spurious-Free Dynamic Range (SFDR)
The difference, in dB, between the rms amplitude of the DAC's output signal (or ADC's input signal) and the peak spurious signal over the specified bandwidth (Nyquist bandwidth unless otherwise noted).

Pipeline Delay (Latency)
The number of clock cycles between conversion initiation and the associated output data being made available.

Offset Error
First transition should occur for an analog value 1/2 LSB above –full scale. Offset error is defined as the deviation of the actual transition from that point.

Gain Error
The first code transition should occur at an analog value 1/2 LSB above –full scale. The last transition should occur for an analog value 1 1/2 LSB below the nominal full scale. Gain error is the deviation of the actual difference between first and last code transitions and the ideal difference between first and last code transitions.

Aperture Delay
The aperture delay is a measure of the Sample-and-Hold Amplifier (SHA) performance and specifies the time delay between the rising edge of the sampling clock input to when the input signal is held for conversion.

Aperture Uncertainty (Jitter)
Aperture jitter is the variation in aperture delay for successive samples and is manifested as noise on the input to the ADC.

Input Referred Noise
The rms output noise is measured using histogram techniques. The ADC output code's standard deviation is calculated in LSB and converted to an equivalent voltage. This results in a noise figure that can be referred directly to the input of the AD9860/AD9862.

Signal-to-Noise and Distortion (S/N+D, SINAD) Ratio
S/N+D is the ratio of the rms value of the measured input signal to the rms sum of all other spectral components below the Nyquist frequency, including harmonics but excluding dc. The value for S/N+D is expressed in decibels.

Effective Number of Bits (ENOB)
For a sine wave, *SINAD* can be expressed in terms of the number of bits. Using the following formula:

$$N = \frac{\left(SINAD - 1.76\ dB\right)}{6.02}$$

it is possible to get a measure of performance expressed as *N*, the effective number of bits. Thus, effective number of bits for a device for sine wave inputs at a given input frequency can be calculated directly from its measured SINAD.

Signal-to-Noise Ratio (SNR)
SNR is the ratio of the rms value of the measured input signal to the rms sum of all other spectral components below the Nyquist frequency, excluding harmonics and dc. The value for SNR is expressed in decibels.

Total Harmonic Distortion (THD)
THD is the ratio of the rms sum of the first six harmonic components to the rms value of the measured input signal and is expressed as a percentage or in decibels.

Power Supply Rejection
Power supply rejection specifies the converter's maximum full-scale change when the supplies are varied from nominal to minimum and maximum specified voltages.

Channel-to-Channel Isolation (Crosstalk)
In an ideal multichannel system, the signal in one channel will not influence the signal level of another channel. The channel-to-channel isolation specification is a measure of the change that occurs to a grounded channel as a full-scale signal is applied to another channel.

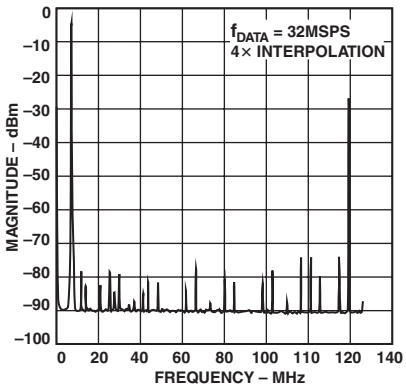

TPC 1. AD9862 Tx Output 6 MHz Single Tone; CLKIN = 32 MHz; DLL 4× Setting

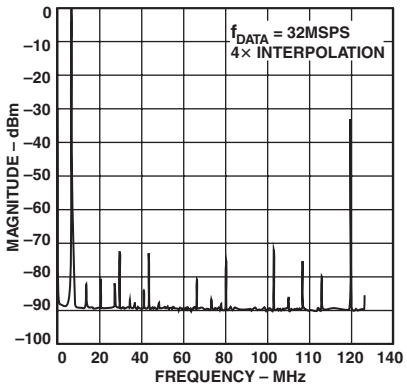

TPC 2. AD9862 Tx Output 6 MHz Single Tone; CLKIN = 64 MHz; DLL 2× Setting

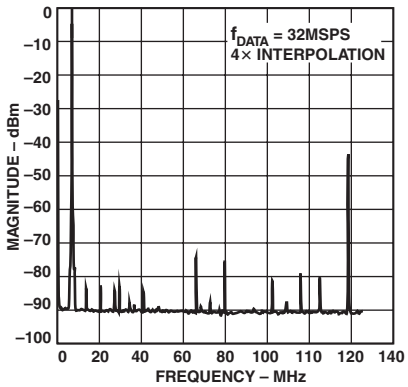

TPC 3. AD9862 Tx Output 6 MHz Single Tone; CLKIN = 128 MHz; DLL 1× Setting

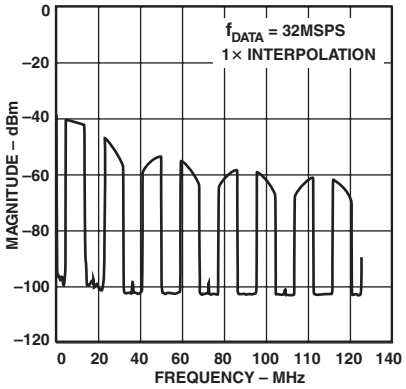

TPC 4. TxDAC Generating an OFDM Signal; CLKIN = 64 MHz, DLL 2× Setting

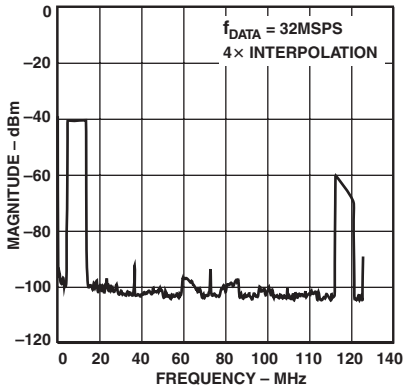

TPC 5. TxDAC Generating an OFDM Signal; CLKIN = 64 MHz, DLL 2× Setting

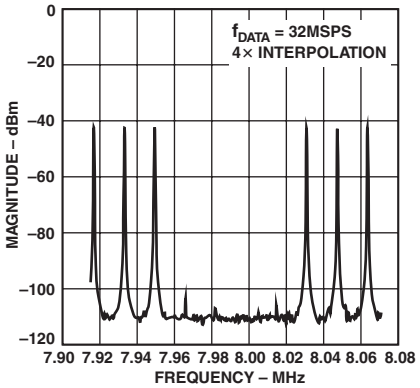

TPC 6. Zoomed in Plot of Four Notched Carriers of OFDM Signal; CLKIN = 64 MHz, DLL 2× Setting

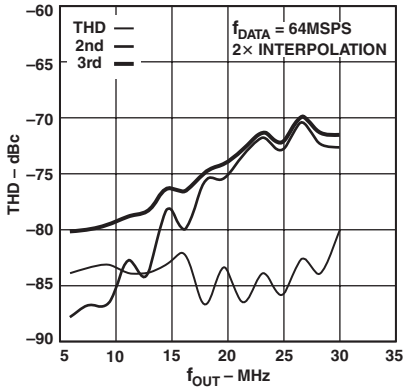

TPC 7. TxDAC Harmonic Distortion vs. f_{OUT}

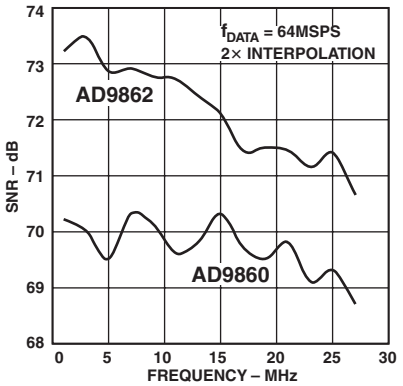

TPC 8. Signal-to-Noise Ratio (SNR) vs. f_{OUT}

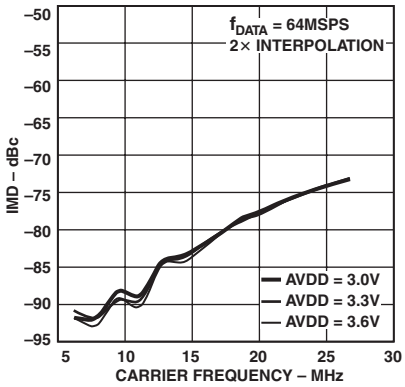

TPC 9. Two Tone Intermodulation vs. f_{OUT1} ($f_{OUT2} = f_{OUT1}$ + 1 MHz)

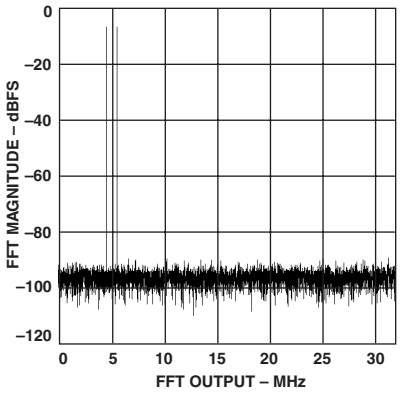

TPC 10. ADC Dual Tone FFT with Buffer Tones at 4.5 MHz and 5.5 MHz

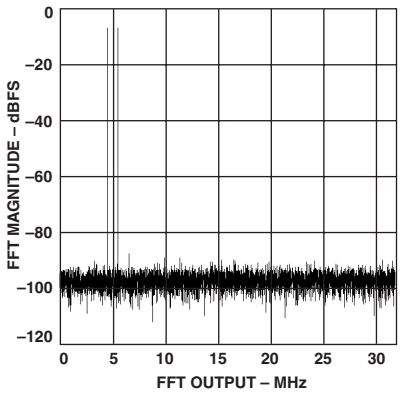

TPC 11. ADC Dual Tone FFT without Buffer Tones at 4.5 MHz and 5.5 MHz

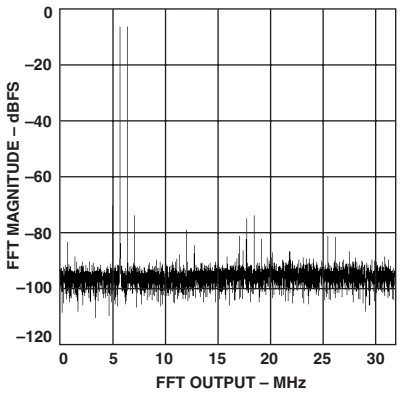

TPC 12. ADC Dual Tone FFT (undersampling) without Buffer Tones at 69.5 MHz and 70.5 MHz

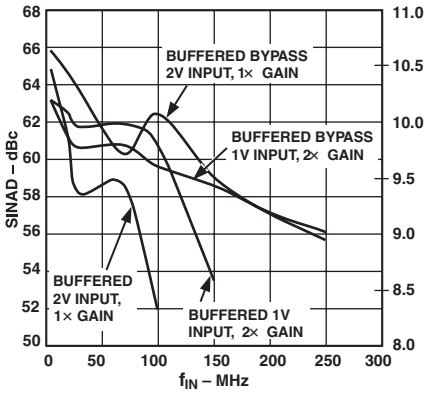

TPC 13. AD9862 Rx SINAD vs. f_{IN} at 64 MSPS

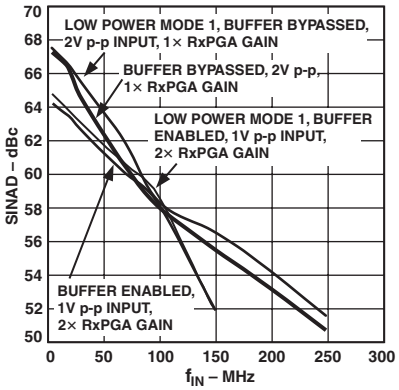

TPC 14. AD9862 Rx SINAD vs. f_{IN} at 32 MSPS

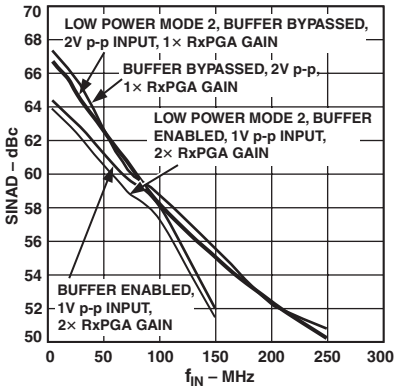

TPC 15. AD9862 Rx SINAD vs. f_{IN} at 16 MSPS

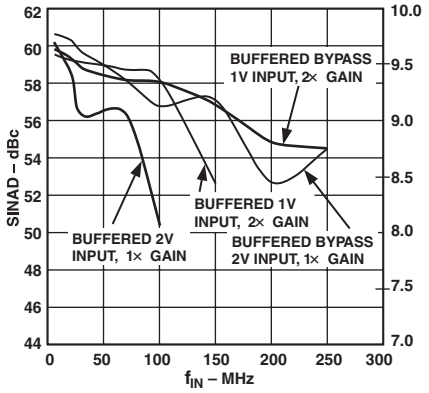

TPC 16. AD9860 Rx SINAD vs. f_{IN} at 64 MSPS

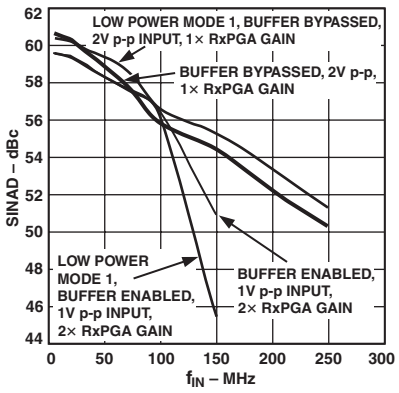

TPC 17. AD9860 Rx SINAD vs. f_{IN} at 32 MSPS

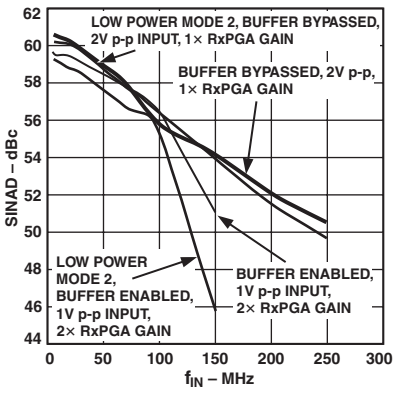

TPC 18. AD9860 Rx SINAD vs. f_{IN} at 16 MSPS

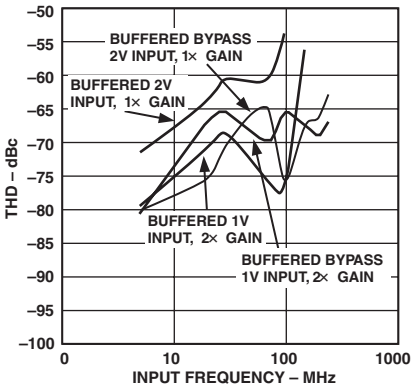

TPC 19. Rx THD vs. f_{IN}, F_{ADC} = 64 MSPS

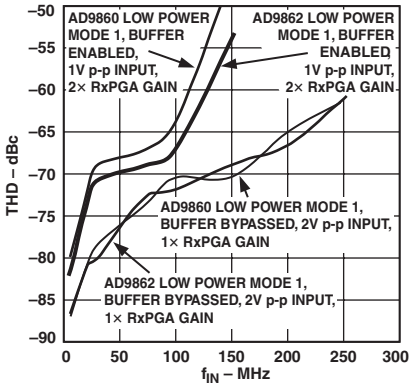

TPC 20. Rx THD vs. f_{IN}, F_{ADC} = 32 MSPS

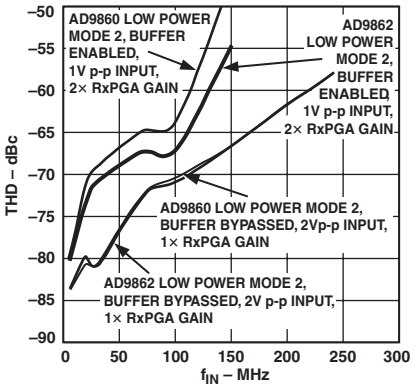

TPC 21. Rx THD vs. f_{IN}, F_{ADC} = 16 MSPS

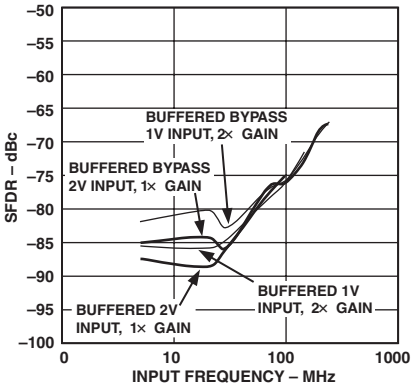

TPC 22. Rx SFDR @ 64 MSPS

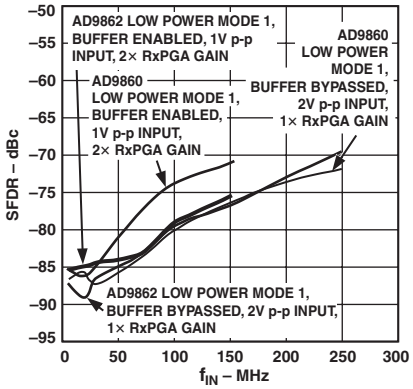

TPC 23. Rx SFDR @ 32 MSPS

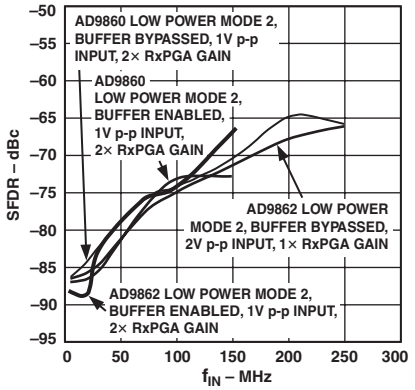

TPC 24. Rx SFDR @ 16 MSPS

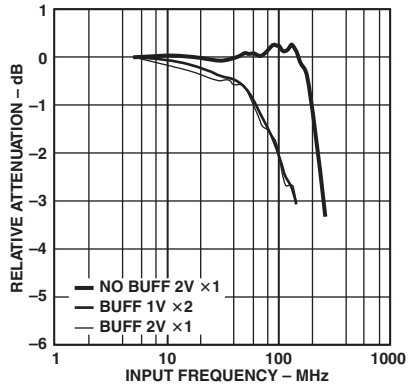

TPC 25. Rx Input Attenuation

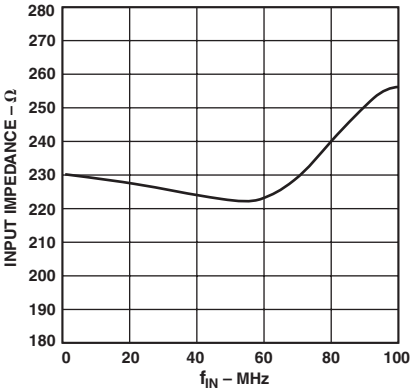

TPC 26. Rx Input Buffer Impedance vs. f_{IN}

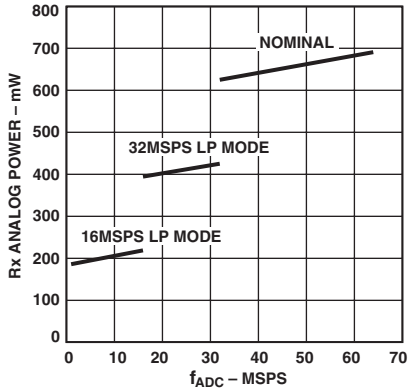

TPC 27. Rx Analog Power Consumption

REGISTER MAP (0x00–0x3F)[1]

Register Name	Address[2]	Bit 7	Bit 6	Bit 5	Bit 4	Bit 3	Bit 2	Bit 1	Bit 0	Purpose
General	0	SDIO BiDir	LSB First	Soft Reset						SPI Setup
Rx Power Down	1	V_{REF} (diff)	V_{REF}	Rx Digital	Rx Channel B	Rx Channel A	Buffer B	Buffer A	All Rx	Receive Path Setup
Rx A	2	Byp Buffer A			RxPGA A					
Rx B	3	Byp Buffer B			RxPGA B					
Rx Misc	4						HS Duty Cycle	Shared Ref	Clk Duty	
Rx I/F	5				Three State	Rx Retime	Twos Complement	Inv RxSync	Mux Out	
Rx Digital	6					2 Channel	Keep –ve	Hilbert	Decimate	
RSV	7	Reserved for Future Use								Transmit Path Setup
Tx Power Down	8			Alt Timing Mode	TxOff Enable	Tx Digital	Tx Analog Power Down [2:0]			
RSV	9	Reserved for Future Use								
Tx A Offset	10	DAC A Offset [1:0]							DAC A Offset Direction	
Tx A Offset	11	DAC A Offset [9:2]								
Tx B Offset	12	DAC B Offset [1:0]							DAC B Offset Direction	
Tx B Offset	13	DAC B Offset [9:2]								
Tx A Gain	14	DAC A Coarse Gain		DAC A Fine Gain						
Tx B Gain	15	DAC B Coarse Gain		DAC B Fine Gain						
Tx PGA Gain	16	Tx PGA Gain								
Tx Misc	17							Slave Enable	Tx PGA Fast	
Tx I/F	18		Tx Retime	Q/I Order	Inv TxSync	Twos Complement	Inverse Sample	2 Edges	Interleaved	
Tx Digital	19				2 Data Paths	Keep –ve	Hilbert	Interpolation Control		
Tx Modulator	20			Neg. Fine Tune	Fine Mode	Real Mix	Neg. Coarse Tune	Coarse Modulation		
NCO Tuning Word	21	FTW [7:0]								NCO Setup
NCO Tuning Word	22	FTW [15:8]								
NCO Tuning Word	23	FTW [23:16]								
DLL	24	Reserved	Input Control Clock	ADC Div 2	DLL Multiplier		DLL Power Down		DLL FAST	Clock Setup
CLKOUT	25	CLKOUT2 Divide Factor		Inv2	Dis2			Inv1	Dis1	
Aux ADC A2	26	Aux ADC A2 Data [1:0]								Auxiliary ADC Data and Setup
Aux ADC A2	27	Aux ADC A2 Data [9:2]								
Aux ADC A1	28	Aux ADC A1 Data [1:0]								
Aux ADC A1	29	Aux ADC A1 Data [9:2]								
Aux ADC B2	30	Aux ADC B2 Data [1:0]								
Aux ADC B2	31	Aux ADC B2 Data [9:2]								
Aux ADC B1	32	Aux ADC B1 Data [1:0]								
Aux ADC B1	33	Aux ADC B1 Data [9:2]								
Aux ADC Control	34	Aux SPI	SelBnot A	Refsel B	Select B	Start B	Refsel A	Select A	Start A	
Aux ADC Clock	35								CLK/4	
Aux DAC A	36	Aux DAC A								Auxiliary DAC Data and Setup
Aux DAC B	37	Aux DAC B								
Aux DAC C	38	Aux DAC C								
Aux DAC	39	Slave Enable					Update C	Update B	Update A	
Update Aux DAC	40						Power Down C	Power Down B	Power Down A	
DAC Control	41				Inv C		Inv B		Inv A	
SigDelt	42	Sigma-Delta Control Word [3:0]							Flag	Sigma-Delta Data and Setup
SigDelt	43	Sigma-Delta Control Word [11:4]								
ADC Low Power	49, 50	Low Power Register for Rx Path Operation below 32 MSPS								Rx Low Power
RSV	44–62	Reserved for Future Use								Reserved
	63	Chip Rev ID								Chip ID

NOTES

[1] When writing to a register with unassigned register bit(s), a logic low must be written to the unassigned bit(s). By default, after power up or RESET, all registers are set low, except for the bits in the shaded boxes, which are set high.

[2] Decimal

REGISTER BIT DEFINITIONS

REGISTER 0: GENERAL

BIT 7: SDIO BiDir (Bidirectional)
Default setting is low, which indicates SPI serial port uses dedicated input and output lines (i.e., 4-wire interface), SDIO and SDO Pins, respectively. Setting this bit high configures the serial port to use the SDIO Pin as a bidirectional data pin.

BIT 6: LSB First
Default setting is low, which indicates MSB first SPI Port Access Mode. Setting this bit high configures the SPI port access to LSB first mode.

BIT 5: Soft Reset
Writing a high to this register resets all the registers to their default values and forces the DLL to relock to the input clock. The Soft Reset Bit is a one shot register and is cleared immediately after the register write is completed.

REGISTER 1: Rx PWRDWN

BIT 7: V_{REF}, diff (Power-Down)
Setting this bit high will power down the ADC's differential references (i.e., REFT and REFB).

BIT 6: V_{REF} (Power-Down)
Setting this register bit high will power down the ADC reference circuit (i.e., V_{REF}).

BIT 5: Rx Digital (Power-Down)
Setting this bit high will power down the digital section of the receive path of the chip. Typically, any unused digital blocks are automatically powered down.

BIT 4/3: Rx Channel B/Rx Channel A (Power-Down)
Either ADC or both ADCs can be powered down by setting the appropriate register bit high. The entire Rx channel is powered down, including the differential references, input buffer, and the internal digital block. The bandgap reference remains active for quick recovery.

BIT 2/1: Buffer B/Buffer A (Power-Down)
Setting either of these bits high will power down the input buffer circuits for the respective channel. The input buffer should be powered down when bypassed. By default, these bits are low and the input buffers are enabled.

BIT 0: All Rx (Power-Down)
Setting this bit high powers down all circuits related to the receive path.

REGISTER 2/3: Rx A/Rx B

BIT 7: Bypass Buffer A/Bypass Buffer B
Setting either of these bits high will bypass the respective input buffer circuit. When the buffer is bypassed, the input signal is routed directly to the switched capacitor SHA input of the RxPGA. When operating with buffer bypassed, it should be powered down.

BIT 0–4: RxPGA A/RxPGA B
These 5-bit straight binary registers (Bit 0 is the LSB, Bit 4 is the MSB) provide control for the programmable gain amplifiers in the dual receive paths. A 0 dB to 20 dB gain range is accomplished through a switched capacitor network with fast settling of a few clock cycles. The step size is approximately 1 dB. The register default setting is minimum gain or hex00. The maximum setting for these registers is hex14.

REGISTER 4: Rx MISC

BIT 2: HS (High Speed) Duty Cycle
Setting this bit high optimizes duty cycle of the internal ADC sampling clock. It is recommended that this bit be set high in high speed applications when clock duty cycle affects noise and distortion performance the most. This bit should be set high in conjunction with Clk Dut Enable register bit.

BIT 1: Shared Ref
Setting this bit high forces the dual receive ADCs into a mode to share their differential references to provide superior gain matching. When this option is enabled, the REFT of Channel A and Channel B should be connected together off-chip and the REFB of both channels should be connected.

BIT 0: Clk Duty
Setting this bit high enables an on-chip duty cycle stabilizer (DCS) circuit to generate the internal clock for the Rx block. This option is useful for adjusting for high speed input clocks with skewed duty cycle. The DCS Mode can be used with ADC sampling frequencies over 40 MHz.

REGISTER 5: Rx I/F (INTERFACE)

BIT 4: Three-state
Setting this bit high will force both Rx data output buses, including the RxSYNC Pin, into a three-state mode.

BIT 3: Rx Retime
The Rx path can use either of the clock outputs, CLKOUT1 or CLKOUT2, to latch the Rx output data. Since CLKOUT1 and CLKOUT2 have slight phase offsets, this provides some timing flexibility with the interface. By default, this bit is low and the Rx output latches use CLKOUT1. Setting this bit will force the Rx output latches to use CLKOUT2.

BIT 2: Twos Complement
Default data format for the Rx data is straight binary. Setting this bit high will generate two's complement data.

BIT 1: Inv RxSync
When the receive data is multiplexed onto one data port (i.e., Mux Mode Enabled), the RxSYNC Pin can be used to decode which channel generated the current output data at the active port. Default condition is that RxSYNC is high when Channel A is at the output and is low when Channel B is at the output. Setting this bit high reverses this synchronization.

BIT 0: Mux Out
Setting this bit high enables the Rx Mux Mode. Default setting is low, which is Dual Port Mode, (i.e., non Rx Mux Mode). When in Rx Mux Mode, both Rx channels share the same output data bus, pins D0A to D9A (for AD9860) or D0A to D11A (for AD9862). The other Rx output bus (pins D0B to D9B or D0B to D11B) outputs a low logic.

REGISTER 6: Rx Digital

BIT 3: 2 Channel
Setting this bit low disables the Rx B output data port (pins D0B to D9B or D11B), forcing the output pins to zero. By default, the bit is high and both data paths are active.

BIT 2: Keep –ve
This bit selects whether the receive Hilbert filter will filter positive or negative frequencies, assuming the filter is enabled. By default this bit is low, which passes positive frequencies. Setting this bit high will configure the filter to pass negative frequencies.

BIT 1: Hilbert
This bit enables or disables the Hilbert filter in the receive path. By default, this bit is low, which disables the receive Hilbert filter. Setting this bit high enables the receive Hilbert filter.

BIT 0: Decimate
This register enables or disables the decimation filters. By default, the register setting is low and the decimation filter is disabled.

Setting this bit high enables the decimation filters and decimates the receive data by two.

REGISTER 8: Tx PWRDWN

BIT 5: Alt Timing Mode

The timing section in the data sheet describes two timing modes, the "Normal Operation" and the "Alternate Operation" modes. At power up, the default configuration is established from the logic level of the Mode/TxBlank pin. If Mode/TxBlank is logic low, the Normal Operation mode is the default; if the Mode/TxBlank pin is held at a logic high, the Alternative Operation mode is configured at power-up (the DLL is forced to multiply by 4 at power-up by default in this mode). After power up, the operation mode can be configured so that the Mode/TxBlank pin can be used for other functions. To allow this, set this bit high.

BIT 4: TxOff Enable

By default, the Mode/TxBlank pin is not used for any transmit synchronization. The Mode/TxBlank pin input can be used to serve two functions, blanking the DAC outputs and slaving the TxPGA gain control. When this bit is set high, a logic high on the Mode/TxBlank pin forces the Tx digital block to stop clocking. In this mode, the Tx outputs will be static, holding their last update values. To slave the TxPGA gain control to the Mode/TxBlank pin input, register Slave Enable (Register 17, Bit 1) needs to also be programmed. See that register for more information.

BIT 3: Tx Digital (Power-Down)

By default this bit is low, enabling the transmit path digital to operate as programmed through other registers. By setting this bit high, the digital blocks are not clocked to reduce power consumption. When enabled, the Tx outputs will be static, holding their last update values.

BIT 0-2: Tx Analog (Power-Down)

Three options are available to reduce analog power consumption for the Tx channels. The first two options disable the analog output from Tx channel A or B independently, and the third option disables the output of both channels and reduces the power consumption of some of the additional analog support circuitry for maximum power savings. With all three options, the DAC bias current is not powered down so recovery times are fast (typically a few clock cycles). The list below explains the different modes and settings used to configure them.

Power-Down Option	Tx Analog Power-Down Bits Setting [2:0]
Power-Down Tx B Channel Analog Output	[1 0 0]
Power-Down Tx A Channel Analog Output	[0 1 0]
Power-Down Tx A and Tx B Analog Outputs	[1 1 1]

REGISTER 10/11/12/13: DAC OFFSET A/B

DAC A/DAC B Offset

These 10-bit, twos complement registers control a dc current offset that is combined with the Tx A or Tx B output signal. An offset current of up to ±12% I_{OUTFS} (2.4 mA for a 20 mA full-scale output) can be applied to either differential pin on each channel. The offset current can be used to compensate for offsets that are present in an external mixer stage, reducing LO leakage at its output. Default setting is hex00, no offset current. The offset current magnitude is set using the lower nine bits. Setting the MSB high will add the offset current to the selected differential pin, while an MSB low setting will subtract the offset value.

DAC A/DAC B Offset Direction

This bit determines to which of the differential output pins for the selected channel the offset current will be applied. Setting this bit low will apply the offset to the negative differential pin. Setting this bit high will apply the offset to the positive differential pin.

REGISTER 14/15: DAC GAIN A/B

BIT 6, 7: DAC A/DAC B Coarse Gain Control

These register bits will scale the full-scale output current (I_{OUTFS}) of either Tx channel independently. I_{OUT} of the Tx channels is a function of the R_{SET} resistor, the TxPGA setting, and the Coarse Gain Control setting.

MSB, LSB	Tx Channel Current Scaling
10 or 11	Does not scale output current
01	Scales output current by 1/2
00	Scales output current by 1/11

BIT 5–0: DAC A/DAC B Fine Gain

The DAC output curve can be adjusted fractionally through the Gain Trim Control. Gain trim of up to ±4% can be achieved on each channel individually. The Gain Trim register bits are a twos complement attention control word.

MSB, LSB	
100000	Maximum positive gain adjustment
111111	Minimum positive gain adjustment
000000	No adjustment (default)
000001	Minimum negative gain adjustment
011111	Maximum negative gain adjustment

REGISTER 16: TxPGA GAIN

BIT 0–7: TxPGA Gain

This 8 bit, straight binary (Bit 0 is the LSB, Bit 7 is the MSB) register controls for the Tx programmable gain amplifier (TxPGA). The TxPGA provides a 20 dB continuous gain range with 0.1 dB steps (linear in dB) simultaneously to both Tx channels. By default, this register setting is hex00.

MSB, LSB	
000000	Minimum gain scaling –20 dB
111111	Maximum gain scaling 0 dB

REGISTER 17: Tx MISC

BIT 1: Slave Enable

The TxPGA Gain is controlled through register TxPGA Gain setting and by default is updated immediately after the register write. If this bit is set, the TxPGA Gain update is synchronized with the rising edge of a signal applied to the Mode/TxBlank pin. Setting TxOff enable in Register 8 is also required.

BIT 0: TxPGA Fast (Update Mode)

The TxPGA Fast bit controls the update speed of the TxPGA. When Fast Update mode is enabled, the TxPGA provides fast gain settling within a few clock cycles. Default setting for this bit is low, which indicates Normal Update mode. Fast mode is enabled when this bit is set high.

REGISTER 18: Tx IF (INTERFACE)

BIT 6: Tx Retime

The Tx path can use either of the clock outputs, CLKOUT1 or CLKOUT2, to latch the Tx input data. Since CLKOUT1 and CLKOUT2 have slight phase offsets, this provides some timing flexibility with the interface. By default, this bit is high and the Tx input latches use CLKOUT1. Setting this bit low will force the Tx latches to use CLKOUT2.

BIT 5: Q/I Order
This register indicates the order of received complex transmit data. By default this bit is low, representing I data preceding Q data. Alternatively, if this bit is set high, the data format is defined as Q data preceding I data.

BIT 4: Inv TxSync
This register identifies how the first and second data sets are identified in a complex data set using the TxSYNC bit. By default this bit is low, and TxSYNC low indicates the first data set is at the Tx port; TxSYNC high indicates the second data set is at the Tx port. Setting this bit high inverts the TxSYNC bit. TxSYNC high indicates the first of the data set, and TxSYNC low indicates the second of the data set.

BIT 3: Twos Complement
The default data format for Tx data is straight binary. Set this bit high when providing twos complement Tx data.

BIT 2: Inverse Sample
By default, the transmit data is sampled on the rising edge of the CLKOUT. Setting this bit high will change this, and the transmit data will be sampled on the falling edge.

BIT 1: 2 Edges
If the CLKOUT rate is running at half the interleaved data rate, both edges of the CLKOUT must latch transmit data. Setting this bit high allows this clocking configuration.

BIT 0: Interleaved
By default, the AD9860/AD9862 powers up in single DAC operation. If dual transmit data is to be used, the interleaved data option needs to be enabled by setting this bit high.

REGISTER 19: Tx DIGITAL

BIT 4: 2 Data Paths
Setting this bit high enables both transmit digital paths. By default, this bit is low and the transmit path utilizes only a single channel.

BIT 3: Keep –ve
This bit configures the Tx Hilbert filter for either positive or negative frequencies pass band, assuming it is enabled. By default this bit is low, which selects the positive frequencies. Setting this bit high will setup the Hilbert filter to pass negative frequencies.

BIT 2: Hilbert
This bit enables or disables the Hilbert filter in the transmit path. By default, this bit is low, which disables the transmit Hilbert filter. Setting this bit high enables the transmit Hilbert filter.

BIT 1,0: Interpolation Control
These register bits control the interpolation rate of the transmit path. Default settings are both bits low, indicating that both interpolation filters are bypassed. The MSB and LSB are address D19, Bits 1 and 0, respectively. Setting binary 01 provides an interpolation rate of 2×; binary 10 provides an interpolation rate of 4×.

REGISTER 20: Tx MODULATOR

BIT 5: Negative Fine Tune
When this bit is low (default), the Numerically Controlled Oscillator (NCO) provides positive shifts in frequency, assuming fine modulation is enabled. Setting this bit high will use a negative frequency shift in the Fine Complex Modulator.

BIT 4: Fine Mode
By default, the NCO and fine modulation stage are bypassed. Setting this bit high will enable the use of the digital complex modulator, enabling tuning with the NCO.

BIT 3: Real Mix Mode
This bit determines if the coarse modulation (controlled by register Coarse Modulation, will perform a separate real mix on each channel or a complex mix using the dual channel data. By default, this bit is set low and a complex mix will be performed. Setting this bit high will enable the Real Mix mode. Note, the Fine Modulator Block only performs complex mixing.

BIT 2: Negative Coarse Tune
When this bit is low (default), the coarse modulator provides positive shifts in frequency. Setting this bit high will shift the coarse modulator processed data negative in frequency.

BIT 1,0: Coarse Modulation
These bits control what coarse modulation processing will be performed on the transmit data. A setting of binary 00 (default) will bypass the modulation block, a setting of binary 01 will shift the transmit data by $f_{DAC}/4$, and a setting of binary 10 will shift the transmit data by $f_{DAC}/8$.

REGISTER 21/22/23: NCO TUNING WORD

FTW [23:0]
These three registers set the 24-bit frequency tuning word (FTW) for the NCO in the fine modulator stage of the Tx path. The NCO full-scale tuning word is straight binary and produces a frequency equivalent to $f_{DAC}/4$ with a resolution of $f_{DAC}/2^{26}$.

REGISTER 24: DLL

BIT 6: Input Clock Control
This bit defines what type of clock will be driving the AD9860/AD9862. The default state is low, which allows either crystal connected to OSC1 and OSC2 or single-ended reference clock driving OSC1 to drive the internal timing circuits. If a crystal will not be used, the internal oscillator should be disabled after power-up by setting this bit high.

BIT 5: ADC Div2
By default, the ADC is driven directly by the input clock in Normal Timing Operation mode or the DLL output in the Alternative Timing Operation mode. Setting this bit high will clock the ADC at one half the previous clock rate. This is described further in the timing section.

BIT 4,3: DLL Multiplier
These bits control the DLL multiplication factor. A setting of binary 00 will bypass the DLL, a setting of binary 01 will multiply the input clock by 2, and a setting of binary 10 will multiply the input clock by 4. Default mode is defined by Mode/TxBlank logic level at power-up or RESET, which configures either Normal Operation Timing mode or Alternative Timing mode. In Alternative Timing mode, the DLL will lock to 4× multiplication factor (the DLL FAST register remains low by default). If the Mode/TxBlank pin is low, by default the DLL will be bypassed and a 1× clock is used internally.

BIT 2: DLL Power-Down
Setting this register bit high forces the CLK IN multiplier to a power-down state. This mode can be used to conserve power or to bypass the internal DLL. To operate the AD9860/AD9862 when the DLL is bypassed, an external clock equal to the fastest on-chip clock is supplied to the OSC pin(s).

BIT 0: DLL FAST
The DLL can be used to generate output frequencies between 32 MHz to 128 MHz. Because of the large range of locking frequencies allowed, the DLL is separated into two output frequency ranges, a “slow” range between 32 MHz to 64 MHz and a “fast” range starting at frequencies above 64 MHz to 128 MHz. By

default, this bit is low, setting up the DLL in "slow" mode. This bit must be set high for DLL output frequencies over 64 MHz.

REGISTER 25: CLKOUT

BIT 7, 6: CLKOUT2 Divide Factor

These bits control what rate the CLKOUT2 Pin will operate at relative to the DLL output rate. The DLL output rate can be output directly or divided by 2, 4, or 8. Bit 7 is the MSB and Bit 6 is the LSB.

MSB, LSB	Relative CLKOUT2 Frequency
00 (Default)	Equals DLL output rate
01	Equals DLL output rate divided by 2
10	Equals DLL output rate divided by 4
11	Equals DLL output rate divided by 8

BIT 5, 1: Inv 2/Inv 1

The output clocks from CLKOUT1 and CLKOUT2 can be inverted by setting the appropriate one of these bits high.

BIT 4, 0: Dis 2/Dis 1

The output clocks from CLKOUT1 and CLKOUT2 can be disabled and a logic low output is forced by setting the appropriate one of these bits high.

REGISTER 26–33: AUXILIARY ADC A2/A1/B2/B1

AUX ADC A2, A1, B2, B1 Data

These registers are read only registers that are used for read back of the 10-bit auxiliary ADC. The 10 bits are broken into a two registers, one containing the upper eight bits and the other containing the lower two bits.

REGISTER 34: AUX ADC CONTROL

BIT 7: Aux SPI (Enable)

One of the Auxiliary ADCs can be controlled through an dedicated Auxiliary Serial Port. Setting this bit high enables this mode.

BIT 6: Sel BnotA

If the auxiliary Serial port is used, this bit selects which Auxiliary ADC, A or B, will be using the dedicated Auxiliary Serial port. The Auxiliary Serial port by default (low setting) controls Auxiliary ADC A. Setting this bit high will allow the Auxiliary Serial Port to control Auxiliary ADC B.

BIT 5, 2: Refsel B/A

By default, the auxiliary ADCs use an external reference applied to the AUX_REF pin. This voltage will act as the full-scale reference for the selected auxiliary ADC. Either auxiliary ADC can use an internally generated reference, which is a buffered version of the analog supply voltage. To enable use of the internal reference for either of the auxiliary ADCs, the respective Refsel register should be set high.

BIT 4, 1: Select B/A

These bits select which of the two inputs will be connected to the respective auxiliary ADC. By default (setting low), the AUX_ADC_A2 pin is connected to Auxiliary ADC A and AUX_ADC_B2 pin is connected to Auxiliary ADC B. Setting the respective bit high will connect the AUX_ADC_A1 pin to Auxiliary ADC A and/or AUX_ADC_B1 pin to Auxiliary ADC B.

BIT 3, 0: Start B/A

Setting a high bit to either of these registers initiates a conversion of the respective auxiliary ADC, A or B. The register bit always reads back a low.

REGISTER 35: AUX ADC CLOCK

BIT 0: CLK/4

By default (setting low), the auxiliary ADCs are run at the receive ADC conversion rate divided by 2. Setting this bit high will run the Auxiliary ADCs with a clock that is 1/4 of the receive ADC conversion rate. The conversion rate of the auxiliary ADCs should be less than 20 MHz.

REGISTER 36, 37, 38: AUX DAC A/B/C

Auxiliary DAC A, B, and C Output Control Word

Three 8-bit, straight binary words are used to control the output of three on-chip auxiliary DACs. The auxiliary DAC output changes take effect immediately after any of the serial write is completed. The DAC output control words have default values of 0. The smaller programmed output controlled words correspond to lower DAC output levels.

REGISTER 39: AUX DAC UPDATE

BIT 7: Slave Enable

A low setting (default) updates the auxiliary DACs after the respective register is written to. To synchronize the auxiliary DAC outputs to each other, a slave mode can be enabled by setting this bit high and then setting a high to the appropriate update registers.

BIT 2/1/0: Update C, B, and A

Setting a high bit to any of these registers initiates an update of the respective Auxiliary DAC, A, B, or C, when Slave mode is enabled using the Slave Enable register. The register bit is a one shot and always reads back a low. Note: be sure to keep the Slave Enable bit high when using the auxiliary DAC synchronization option.

REGISTER 40: AUX DAC POWER-DOWN

BIT 2/1/0: Power Down C, B, and A

Setting any of these bits high will power down the appropriate auxiliary DAC. By default, these bits are low and the auxiliary DACs are enabled.

REGISTER 41: AUX DAC CONTROL

BIT 4, 2, 0: Inv C, B, and A

Setting any of these bits high will invert the appropriate Auxiliary DAC control word setting. By default, these bits are low and the output control word is decoded as noninverted, straight binary.

REGISTER 42/43: SIGDELT (SIGMA-DELTA)

Sigma-Delta Output Control Word

A 12-bit straight binary word is used to control the output of an on-chip sigma-delta converter. The sigma-delta output changes take effect immediately after any serial write is completed. The sigma-delta output control words have default values of 0. The smaller programmed output controlled words correspond to lower integrated sigma-delta output levels.

REGISTER 49,50 : RX LOW POWER MODE

Setting these bits will scale down the bias current to the ADC analog block when the device is operated at lower speeds. By default, these bits are low and the bias is at a nominal setting.

For ADC operation at or below 32 MSPS, Register 49 can be set to 0x03 and Register 50 can be set to 0xEC; this will reduce Rx AVDD power consumption by about 30% relative to nominal.

For ADC operation at or below 16 MSPS, Register 49 can be set to 0x03 and Register 50 can be set to 0x9E; this will reduce Rx AVDD power consumption by about 60% relative to nominal.

REGISTER 63: CHIP ID

BIT 7–0: Rev ID

This read only register indicates the revision of the AD9860/AD9862.

Reserved Registers

Reserved registers are held for future development and should never be written to.

Blank Registers

Blank registers, i.e., the registers with 0 settings and no indicated function, are placeholders used throughout the register map for spacing the AD9860/AD9862 control bits in a logic fashion and, potentially can be used for future development. A low should always be written to these registers if a write needs to take place.

SERIAL PORT INTERFACE

The Serial Port Interface (SPI) is used to write to and read from the AD9860/AD9862 internal programmable registers. The serial interface uses four pins: SEN, SCLK, SDIO, and SDO by default. SEN is a serial port enable pin, SCLK is the serial clock pin, SDIO is a bidirectional data line and SDO is a serial output pin.

SEN is an active low control gating read and write cycles. When SEN is high, SDO and SDIO are three-stated.

SCLK is used to synchronize SPI read and writes at a maximum bit rate of 16 MHz. Input data is registered on the rising edge and output data transitions on the falling edge. During write operations, the registers are updated after the 16th rising clock edge (and 24th rising clock edge for the dual byte case). Incomplete write operations are ignored.

SDIO is an input only by default. Optionally, a 3-pin interface may be configured using the SDIO for both input and output operations and three-stating the SDO pin (see SDIO BiDir register).

SDO is a serial output pin used for read back operations in 4-wire mode and is three-stated when SDIO is configured for bidirectional operation.

Instruction Header

Each SPI read or write consists of an instruction header and data. The instruction header is made up of an 8-bit word and is used to set up the register data transfer. The 8-bit word consists of a read/not write bit, R/nW (the MSB), followed by a double/not single bit (2/n1) and the 6-bit register address.

Write Operations

The SPI write operation uses the instruction header to configure a one or two register write using the 2/n1 bit. The instruction byte followed by the register data, is written serially into the device through the SDIO pin on rising edges of the interface clock at SCLK. The data can be transferred MSB first or LSB first depending on the setting of the LSB First register.

Figure 1 includes a few examples of writing data into the device. Figure 1a shows a write using 1 Byte and MSB First mode set; Figure 1b shows an MSB first, 2 Byte write; and Figure 1c shows an LSB first, 2 Byte write. Note the differences between LSB and MSB First modes: instruction header and data are reversed, and in 2 Byte writes, the first data byte is written to the address in the header, N and the second data byte is written to the n–1 address. In LSB First mode, the first data byte is still written to the address in the instruction header, but the second data byte is written to the N+1 address.

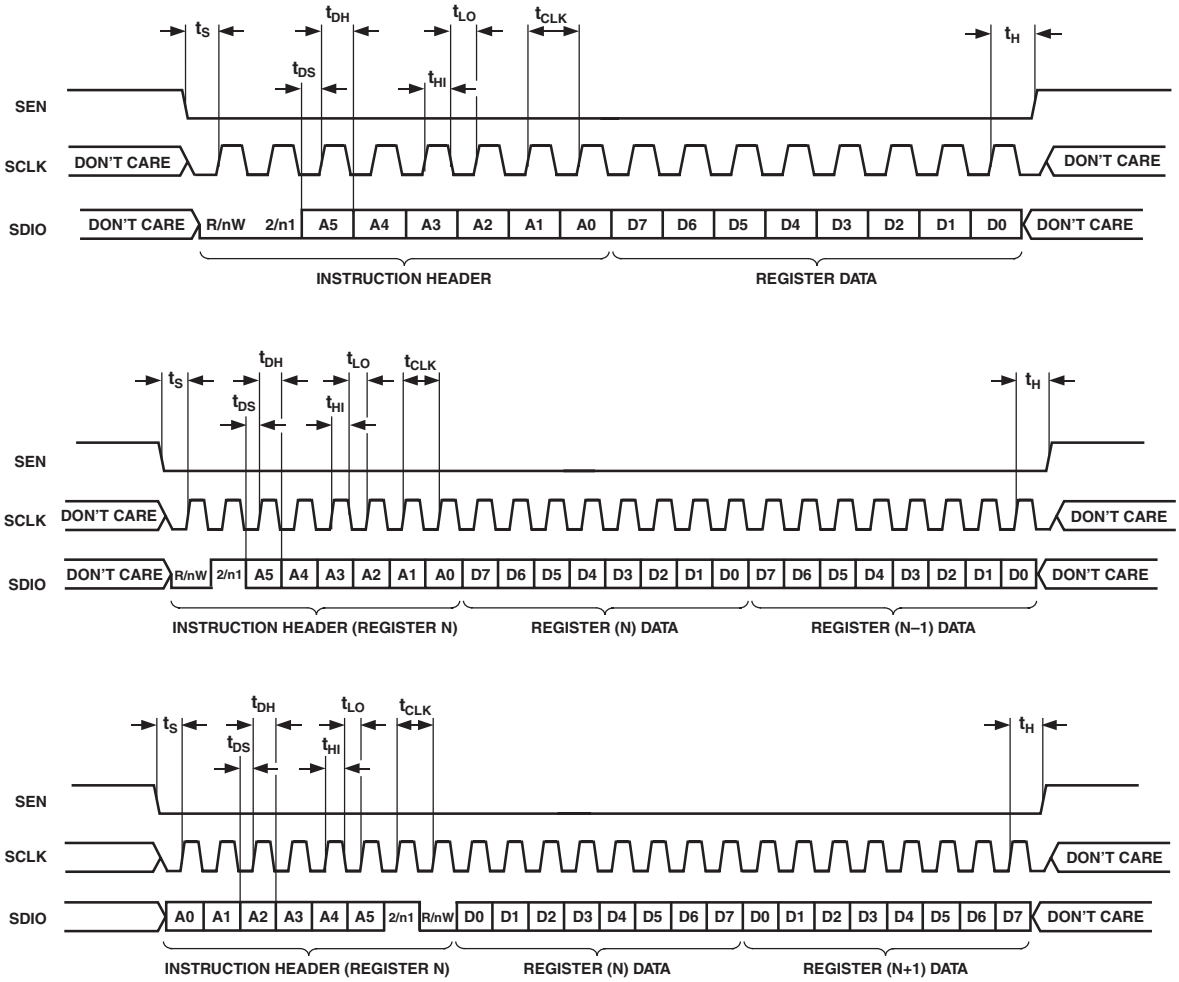

Figure 1. SPI Write Examples a. (top) 1 Byte, MSB First Mode; b. (middle) 2 Byte, MSB First Mode; c. (bottom) 2 Byte, LSB First Mode

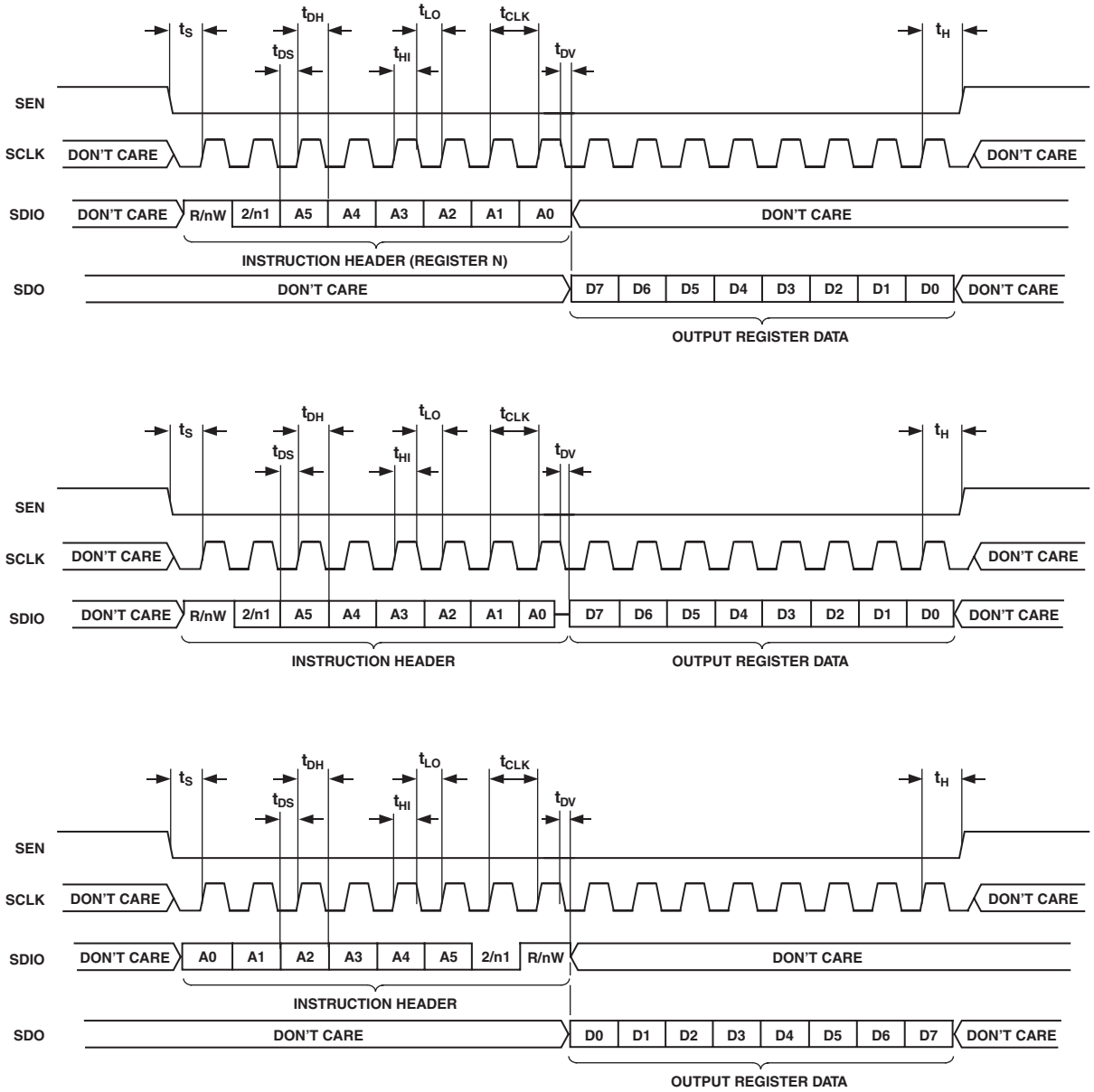

Figure 2. SPI Read Examples a. (top) 4-Wire Interface, MSB first; b. (middle) 3-Wire Interface, MSB first; c. (bottom) 4-Wire Interface, LSB first

Read Operation

The read back of registers is a single data byte operation. The readback can be configured to use three pins or four pins and can be formatted as MSB first or LSB first. The instruction header is written to the device either MSB or LSB first (depending on the mode) followed by the 8-bit output data (appropriately MSB or LSB justified). By default, the output data is sent to the dedicated output pin (SDO). 3-wire operation can be configured by setting the SDIO BiDir register. In 3-wire mode, the SDIO pin will become an output pin after receiving the 8-bit instruction header with a read back request.

Figure 2a shows an MSB first, 4-pin SPI read; Figure 2b shows an MSB first, 3-pin read; and Figure 2c shows an LSB first, 4-pin read.

SYSTEM BLOCK DESCRIPTION

The AD9860/AD9862 integrates transmit and receive paths with digital signal processing blocks and auxiliary features. The auxiliary features include two auxiliary ADCs, a programmable sigma-delta output, three auxiliary DACs, integrated clock circuitry to generate all internal clocks, and buffered output clocks from a single input reference.

The AD9860/AD9862 system functionality is described in the following four sections: the Transmit Block, Receive Block, Timing Generation Block, and the Auxiliary Function Block. The following sections provide a brief description of the blocks and applications for the four sections.

TRANSMIT SECTION COMPONENTS

The transmit block (Tx) accepts and can process real or complex data. The Tx interface is configurable for a variety of data formats and has special processing options such as interpolation and Hilbert filters. A detailed block diagram of the AD9860/AD9862 transmit path is shown in Figure 3. The transmit block diagram is broken into these stages: DAC (Block A), Coarse Modulation (Block B),

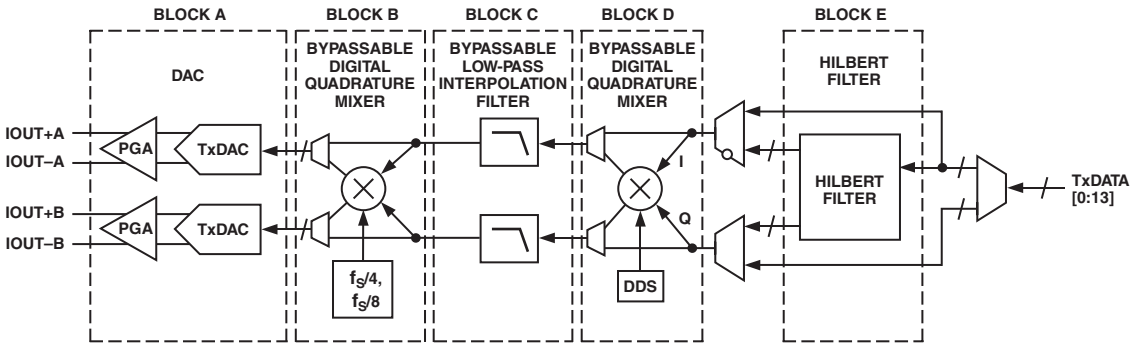

Figure 3. Transmit Section Block Diagram

Interpolation Stage (Block C), Fine Modulation Stage (Block D), Hilbert filter (Block E), and the Latch/Demultiplexing circuitry.

DAC

The DAC stage of the AD9860/AD9862 integrates a high performance TxDAC core, a programmable gain control through a Programmable Gain Amplifier (TxPGA), coarse gain control, and offset adjustment and fine gain control to compensate for system mismatches.

The TxDAC core of the AD9860/AD9862 provides dual, differential, complementary current outputs generated from the 12-/14-bit data. The 12-/14-bit Dual DACs support update rates up to 128 MSPS. The differential outputs (i.e., IOUT+ and IOUT–) of each dual DAC are complementary, meaning they always sum to the full-scale current output of the DAC, I_{OUTFS}. Optimum ac performance is achieved with the differential current interface drives balanced loads or a transformer.

The maximum full-scale output current, $I_{OUTFSMAX}$, is set by the external resistor (R_{SET}), which sets the DAC reference current. The R_{SET} resistor is connected between the FSADJ Pin to ground. The relationship between $I_{OUTFSMAX}$ and R_{SET} is:

$$I_{OUTFSMAX} \sim 67 \times \left(\frac{1.23\,V}{R_{SET}} \right)$$

Typically, R_{SET} is 4 kΩ, which sets $I_{OUTFSMAX}$ to 20 mA, the optimal dynamic setting for the TxDACs. Increasing R_{SET} by a factor of 2 will proportionally decrease $I_{OUTFSMAX}$ by a factor of 2. $I_{OUTFSMAX}$ of each DAC can be re-scaled either simultaneously with the TxPGA Gain register or independently with DAC A/B Coarse Gain registers.

The TxPGA function provides 20 dB of simultaneous gain range for both DACs and is controlled by writing to SPI register TxPGA Gain for a programmable full-scale output of 10% to 100% $I_{OUTFSMAX}$. The gain curve is linear in dB, with steps of about 0.1 dB. Internally, the gain is controlled by changing the main DAC bias currents with an internal TxPGA DAC whose output is heavily filtered via an on-chip R-C filter to provide continuous gain transitions. Note, the settling time and bandwidth of the TxPGA DAC can be improved by a factor of 2 by writing to the TxPGA Fast register.

Each DAC has independent coarse gain control. Coarse gain control can be used to accommodate different I_{OUTFS} from the dual DACs. The coarse full-scale output control can be adjusted using the DAC A/B Coarse Gain registers to 1/2 or 1/11th of the nominal full scale current.

Fine Gain controls and dc offset controls can be used to compensate for mismatches (for system level calibration), allowing improved matching characteristics of the two Tx channels and aiding in suppressing LO feedthrough. This is especially useful in image rejection architectures. The 10-bit dc offset control of each DAC can be used independently to provide a ±12% $I_{OUTFSMAX}$ of offset to either differential pin, thus allowing calibration of any system offsets. The fine gain control with 5-bit resolution allows the $I_{OUTFSMAX}$ of each DAC to be varied over a ±4% range, thus allowing compensation of any DAC or system gain mismatches. Fine gain control is set through the DAC A/B Fine Gain registers and the offset control of each DAC is accomplished using DAC A/B Offset registers.

A power-down option allows the user to power down the analog supply current to both DACs or either DAC, individually. A digital power-down is also possible through either the Tx PwrDwn register or the Mode/TxBlank pin.

Coarse Modulator

A digital coarse modulator is available in the transmit path to shift the spectrum of the input data by $\pm f_{DAC}/4$ or $\pm f_{DAC}/8$. If the input data consists of complex data, the modulator can be configured to perform a complex modulation of the input spectrum. If the data in the transmit path is not complex, a real mix can be performed separately on each channel thereby frequency shifting the real data and images by $f_{DAC}/4$ or $f_{DAC}/8$. Real or complex mixing is configured by setting the Real Mix register.

By default, the coarse modulator is bypassed. It can be configured using Coarse Modulation and Neg Coarse Tune registers.

Interpolation Stage

Interpolation filters are available for use in the AD9860/AD9862 transmit path, providing 1× (bypassed), 2×, or 4× interpolation. The interpolation filters effectively increase the Tx data rate while suppressing the original images. The interpolation filters digitally shift the worst case image further away from the desired signal, thus reducing the requirements on the analog output reconstruction filter.

There are two 2× interpolation filters available in the Tx path. An interpolation rate of 4× is achieved using both interpolation filters; an interpolation rate of 2× is achieved by enabling only the first 2× interpolation filter.

The first interpolation filter provides 2× interpolation using a 39 tap filter. It suppresses out-of-band signals by 60 dB or more and has a flat passband response (less than 0.1 dB ripple) extending to 38% of the AD9860/AD9862 input Tx data rate (19% of the DAC update rate, f_{DAC}). The maximum input data rate is 64 MSPS per channel when using 2× interpolation.

The second interpolation filter will provide an additional 2× interpolation for an overall 4× interpolation. The second filter is a 15 tap filter. It suppresses out-of-band signals by 60 dB or more. The flat passband response (less than 0.1 dB attenuation) is 38% of the Tx input data rate (9.5% of f_{DAC}). The maximum input data rate per channel is 32 MSPS per channel when using 4× interpolation.

The 2× and 4× Interpolation Filter Transfer function plots are shown in Figure 4a and 4b, respectively.

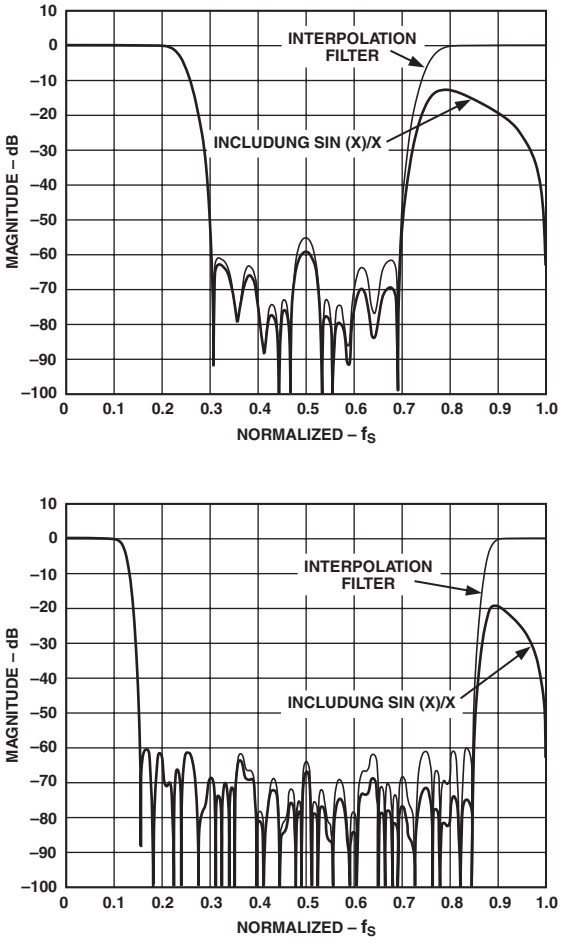

Figure 4. Spectral Response of 2× Interpolation Filter (top) and 4× Interpolation Filter (bottom)

Fine Modulation Stage

A digital fine modulation stage is available in the transmit path to shift the complex Tx output spectrum using a 24-bit numerically controlled oscillator (NCO). To utilize the Fine Modulation Block, 4× interpolation is required. Therefore, the maximum input date rate is 32 MSPS per channel, which generates a DAC update rate, f_{DAC}, of 128 MSPS. The NCO can tune up to 1/4 of f_{DAC}, providing a step resolution of $f_{DAC}/2^{26}$. Since the Fine Modulation Stage precedes the Interpolation Filters, care must be taken to ensure the entire desired signal is placed within the pass band of the Interpolation Filter.

By default, the Fine Modulation Block is bypassed. To enable it to perform a complex mix of the Tx I and Q data, Register 2's data paths, Fine Mod and Fine, should be configured. The NCO frequency tuning word is set in the three FTW registers.

Hilbert Filter

The Hilbert filter is available to provide a Hilbert transform of "real" input data at a low intermediate frequency (IF) between 12.5% to 38% of the input data rate. The Hilbert filter essentially transforms this "real," single channel input data into a complex representation (i.e., I and Q components) that can be used as part of an image rejection architecture. The complex data can than be processed further using the on-chip digital complex modulators. The Hilbert filter requires 4× interpolation to be enabled and accepts data at a maximum 32 MSPS. Figure 5 shows a spectral plot of the Hilbert filter impulse response.

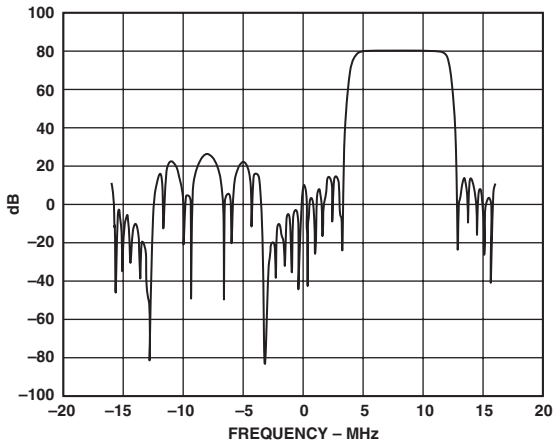

Figure 5. Tx Hilbert Filter, Keeping Positive Frequencies Spectral Plot

Latch/Demultiplexer

The AD9860/AD9862 Tx path accepts dual or single channel data. The dual channel data can represent two independent real signals or a complex signal. Various input data latching schemes relative to one of the output clocks, CLKOUT1 or CLKOUT2, are allowed, including using any combination of rising and falling clock edges.

Associated Tx timing is discussed in detail in the Clock Overview section of the data sheet.

TRANSMIT APPLICATIONS SECTION

The AD9860/AD9862 transmit path (Tx) includes two, high speed, high performance, 12-/14-bit TxDACs. Figure 3 shows a detailed block diagram of the transmit data path and can be referred to throughout the explanation of the various modes of operation. The various Tx modes of operation are broken into three parts, determined by the format of the input data. They are:

1. Single Channel DAC Data
2. Two Independent Real Signal DAC Data (diversity or dual channel
3. Dual Channel Complex DAC Data (I and Q or Single Sideband)

Single Channel DAC Data

In this mode, 12-/14-bit single channel Tx data is provided to the AD9860/AD9862 and latched using either CLKOUT1 or CLKOUT2 edges as defined in the Clock Overview section of the data sheet. All Tx digital signal processing blocks can be utilized to address reconstruction filtering at the DAC output and aid in frequency tuning.

In most systems, the DAC (and each up-converter stage) requires analog filtering to meet spectral mask and out-of-band spurious emissions requirements. Digital interpolation (Block C) and Hilbert filtering (Block E) can be used to relax some of the system analog filtering.

Digital 2× interpolation with input data rates of up to 64 MSPS or 4× interpolation with input data rates of 32 MSPS is available in this mode (or interpolation filters can be bypassed to achieve a 128 MSPS input data rate). The data bandwidth with 2× or 4× interpolation enabled is up to 38% of the input data rate. If no interpolation is enabled, the data bandwidth will be the full Nyquist band with Sinc × limitations. The interpolation filters are configured through the Interpolation Serial register.

The Hilbert filter can be enabled in this mode to suppress the positive or negative image that naturally occurs with real data. The single sideband signal when combined with a quadrature modulator can upconvert the desired signal and suppressed image, forming a Hartley Image Rejection Architecture (both Tx paths need to be enabled to produce the Image Rejection Architecture). The Hilbert filter will provide over 50 dB image suppression for signals between 12.5% to 38% of the input data rate. The Hilbert filter can be enabled and configured using the Hilbert and Keep –ve Serial registers.

Digital frequency tuning the Tx output is also possible in this mode using the coarse modulation block. The coarse modulation block can be used to frequency shift the Tx signal either $-f_{DAC}/4$, $-f_{DAC}/8$, $+f_{DAC}/8$ or $+f_{DAC}/4$. The coarse modulator does not require the Hilbert filter to be enabled, in which case the real signal and image will shift. If the Hilbert filter is enabled, a complex mix can be performed on the single sideband signal by the coarse modulator (Note: the Hilbert filter does not need to be enabled if single sideband data is provided externally).

The fine modulator can be used to accurately place the output signal shifting the Tx data spectrum in the positive or negative direction with a resolution of $f_{DAC}/2^{26}$. The fine modulator requires both 4× interpolation and the Hilbert filter enabled to be used in this mode. The coarse modulator and fine modulator can both be used and provide a tuning range between ±68% of the DAC Nyquist frequency.

If all Tx DSP blocks are bypassed, the AD9860/AD9862 operates similar to a standard TxDAC. In Single Channel DAC Data mode, only the Channel A DAC is used; Channel B is powered down to reduce power consumption.

Two Independent Real Signal DAC Data

The Dual Channel Real DAC Data mode is used to transmit diversity or dual channel signals. In this mode, 12-/14-bit, dual channel, interleaved Tx data is provided to the AD9860/AD9862 and latched using either CLKOUT1 or CLKOUT2 edges as defined in the Clock Overview section of the data sheet. Both Tx paths are enabled and the two signals will be processed independently. The Tx digital processing blocks available in this mode are the Interpolation Filters (Block C) and the Coarse Modulator (Block D).

As mentioned previously, the interpolation filters can be used to relax requirements on the external analog filters. The maximum rate of the Tx interface is 128 MSPS, i.e., 64 MSPS/channel with interleaved data. Therefore to fully take advantage of the DACs maximum update rate of 128 MSPS, 2× interpolation is required. The 4× interpolation filter is recommended for input data rates equal to or less than 32 MSPS/channel (64 MSPS interleaved). The data bandwidth with 2× or 4× interpolation enabled is up to 37.5% of the channel input data rate. If no interpolation is enabled, the data bandwidth will be the full Nyquist band with Sinc × limitations. The interpolation filters are configured through the Interpolation Serial register.

The coarse modulation will perform a real mix of each channel, independently, with either $f_{DAC}/4$ or $f_{DAC}/8$.

Dual Channel Complex DAC Data

The Dual Channel Complex DAC Data (also known as Single Sideband Data) is used to generate complex Tx signals (i.e., I and Q). In this mode, 12-/14-bit, interleaved I and Q data is provided to the AD9860/AD9862 and latched using either CLKOUT1 or CLKOUT2 edges as defined in the Clock Overview section of the data sheet. Both Tx paths are enabled and the two signals will be processed as a complex waveform. The Tx digital processing blocks available in this mode are the Fine Modulator (Block B), the Interpolation Filters (Block C), and the Coarse Modulator (Block D).

As mentioned previously, the interpolation filters can be used to relax requirements on the external analog filters. The maximum rate of the Tx interface is 128 MSPS, i.e., 64 MSPS/channel with interleaved data (as is the case in this mode). Therefore, to fully take advantage of the DAC's maximum update rate of 128 MSPS, 2× interpolation is required. The 4× interpolation is recommended for input data rates equal to or less than 32 MSPS/channel (64 MSPS interleaved). The data bandwidth with 2× or 4× interpolation enabled is up to 37.5% of the channel input data rate. If no interpolation is enabled, the data bandwidth will be the full Nyquist band with Sinc × limitations. The interpolation filters are configured through the Interpolation Serial register.

A complex mix can be performed on the single sideband signal by the coarse and/or fine modulator. The coarse modulation block can be used to frequency shift the Tx signal either $-f_{DAC}/4$, $-f_{DAC}/8$, $+f_{DAC}/8$ or $+ f_{DAC}/4$. The fine modulator can be used to accurately place the output signal shifting the Tx data spectrum in the positive or negative direction with a resolution of $1/2^{26}$ of the DAC update rate. The fine modulator requires 4× interpolation to be enabled. The coarse modulator and fine modulator can both be used and provide a tuning range between ±70% of the DAC Nyquist frequency.

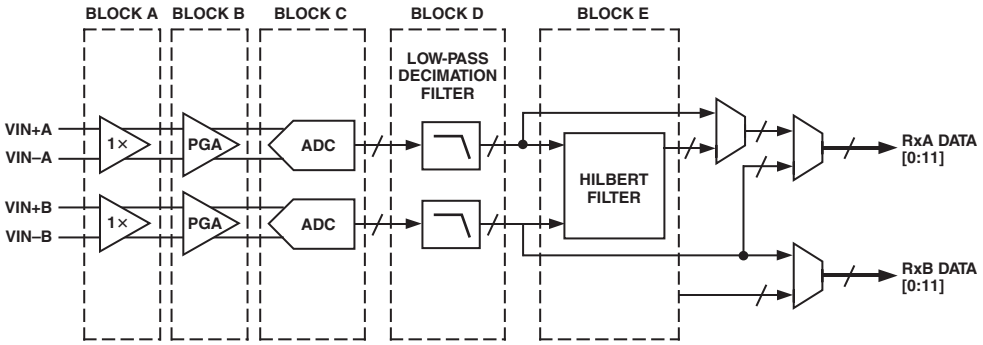

Figure 6. Receive Section Block Diagram

RECEIVE SECTION COMPONENTS

The receive block is configurable to process input signals of different formats and has special features such as an input buffer, gain stage, and decimation filters. The AD9860/AD9862 receive path block diagram is shown in Figure 6. The block diagram can be broken into the following stages: Input Buffer (Block A), RxPGA (Block B), dual, 10-/12-bit, 64 MSPS ADC (Block C), Decimation filter (Block D), Digital Hilbert Block (Block E), and a Data Output Multiplexer. The function of each stage is explained in the following paragraphs.

Input Buffer Stage

The input buffer stage buffers the input signal on-chip for both receive paths. The buffer stage has two main benefits, providing a constant input impedance and reducing any "kick-back" noise that might be generated on-chip, affecting the analog input signal.

The Rx path sampling mode can be split into two categories, depending on the frequency of the input signal. When sampling input signals up to Nyquist of the ADC, the sampling is referred to as Nyquist sampling. When sampling at rates above ADC Nyquist rate, the sampling is referred to as IF sampling or undersampling.

For Nyquist sampling, the input buffer provides a constant 200 Ω impedance over the entire input signal range. The constant input impedance accommodates matching networks to ensure proper transfer of signal to the input of the device. The input buffer is self-biased to ~ 2 V, and therefore the input signal should be ac-coupled to the Rx differential input or have a common-mode voltage of about 2 V. If an external buffer is present, the internal input buffer can be bypassed and powered down to reduce power consumption. The input buffer accepts up to a 2 V p-p input signal for maximum SNR performance. Optimal THD performance occurs with 1 V p-p input signal.

For IF sampling, the input buffer can be used with input signals up to about 100 MHz, the 3 dB bandwidth of the buffer. When undersampling the input signal, the output spectrum will contain an aliased version of the original, higher frequency signal. As was the case with Nyquist sampling, the input signal should be ac-coupled to the Rx differential input or have a common-mode voltage of ~ 2 V. For input signals over 100 MHz to about 250 MHz, the input buffer needs to be bypassed and an external input buffer is required. In the case that the input buffer is bypassed, the input circuit is a switched capacitor network. The switching input impedance during the sample phase is about $1/(2(\pi)FC)$, where F is the input frequency and C is the input capacitance (about 4 pF). During hold mode, the input impedance is > 1 MΩ.

RxPGA

The RxPGA stage has a Programmable Gain Amplifier that can be used to amplify the input signal to utilize the entire input range of the ADC. The RxPGA stage provides a 0 dB to 20 dB gain range in steps of about 1 dB. The Rx channel independent gain control is accomplished through two 5-bit SPI programmable RxPGA A/B registers. The gain curve is linear in dB with a minimum gain setting (0 dB, nominally) of hex00 and a maximum gain setting (20 dB, nominally) of hex14.

The RxPGA stage can provide up to a 2 V p-p signal to the ADC input.

Analog-to-Digital (A/D) Converter

The analog-to-digital converter (ADC) stage consists of two high performance 10-/12-bit, 64 MSPS analog-to-digital (A/D) converters. The dual A/D converter paths are fully independent, except for a shared internal bandgap reference source, V_{REF}. Each of the A/D converter's paths consists of a front-end sample and hold amplifier followed by a pipelined, switched capacitor, A/D converter. The pipelined A/D converter is divided into three sections, consisting of a 4-bit first stage followed by eight 1.5-bit stages and a final 3-bit flash. Each stage provides sufficient overlap to correct for flash errors in the preceding stages. The quantized outputs from each stage are combined into a final 12-bit result through a digital correction logic block. The pipelined architecture permits the first stage to operate on a new input sample while the remaining stages operate on preceding samples. Sampling occurs on the rising clock edge.

Each stage of the pipeline, excluding the last, consists of a low resolution flash A/D connected to a switched capacitor DAC and interstage residue amplifier (MDAC). The residue amplifier magnifies the difference between the reconstructed DAC output and the flash input for the next stage in the pipeline. One bit of redundancy is used in each one of the stages to facilitate digital correction of flash errors. The last stage simply consists of a flash A/D.

A stable and accurate 1.0 V bandgap voltage reference is built into the AD9860/AD9862 and is used to set a 2 V p-p differential input range. The internally generated reference should be decoupled at the V_{REF} pin using a 10 µF and a 0.1 µF capacitor in parallel to ground. Separate top and bottom references, V_{RT} and V_{RB}, for each converter are generated from V_{REF} and should also be decoupled. Recommended decoupling for the top and bottom references consists of using 10 µF and 0.1 µF capacitors in parallel between the differential reference pins, and a 0.1 µF capacitor

from each to ground. The internal references can also be disabled (powered down) and driven externally to provide a different input voltage range or low drift reference. If an external V_{REF} reference is used, it should not exceed 1.0 V.

A Shared Reference mode allows the user to connect the differential references from both ADCs together externally for superior gain matching performance. If the ADCs are to function independently, then the reference can be left separate and will provide superior isolation between the dual channels. Shared Reference mode can be enabled through the Shared Ref register.

A power-down option allows the user to power down both ADCs (sleep mode) or either ADC individually to reduce power consumption.

Decimation Stage

For signals with maximum frequencies less than or equal to 3/16 the ADC sampling rate, f_{ADC}, the decimate by 2 filter (or half-band filter) can be used to provide on-chip suppression of out-of- band images and noise. When data is present in frequencies greater than 1/4 f_{ADC}, the decimate by 2 filter can be disabled by switching the filter out of the circuit. The decimation filter allows the ADC to oversample the input while decreasing the output data rate by half. The two main benefits are a simplification of the input anti-aliasing filter and a slower data interface rate with the external digital ASIC. The decimation filter is an 11 tap filter and suppresses out of band noise by 38 dB.

Hilbert Block

The Hilbert filter is available to provide a Hilbert Transform of the data from the ADC in Channel B. The Digital Hilbert Transform, in combination with an external complex downconverter, enables a receive image rejection architecture (similar to Hartley image rejection architecture). The Hilbert filter pass-band (< 0.1 dB ripple) is between 25% to 75% of the Nyquist rate of its input data rate. The maximum data rate of the Rx Hilbert filter is 32 MSPS. At ADC rates higher than this, the decimation filters should be enabled. The Hilbert filter transfer function plots are shown in Figure 7.

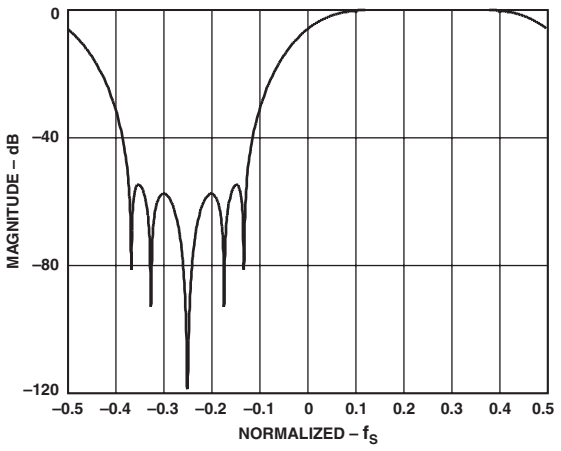

Figure 7. Rx Hilbert Filter, Keeping Positive Frequencies Response

Data Output Multiplexer Stage

The Rx data output format can be configured for either twos complement or offset binary. This is controlled by the Rx Twos Complement register.

The output data from the dual ADCs can be multiplexed onto a single 10-/12-bit output bus. The multiplexing is synchronized using the RxSYNC output pin that indicates which channel data is on the output bus.

RECEIVE APPLICATIONS SECTION

The AD9860/AD9862 receive path (Rx) includes two high speed, high performance, 10-/12-bit ADCs. Figure 6 shows a detailed block diagram of the Rx data path and can be referred to throughout the explanation of the various modes of operation. The various Rx modes of operation are broken into three parts determined by the type of input signal:

1. Single Channel ADC Signal
2. Dual Channel Real ADC Signal (diversity or dual channel)
3. Dual Channel Complex ADC Signal (I and Q or Single Sideband).

Each one of these parts is further divided into two cases, sampling input signals up to Nyquist of the ADC (Nyquist sampling) and sampling at rates above ADC Nyquist rate (IF sampling or undersampling).

The AD9860/AD9862 uses oversampling and decimation filters to ease requirements on external filtering components. The decimation filters (for both receive paths) can be used or bypassed so as to accommodate different signal bandwidths and provide different output data rates to allow easy integration with several different data processing schemes.

Nonbaseband data can be used in an effort to avoid the dc offsets in the receive signal path that can cause errors. By receiving nonbaseband data, the requirements of external filtering may be greatly reduced.

In each of the different receive modes, the input buffer, Programmable Gain Amplifier (RxPGA), and output multiplexer remain within the receive path.

Single Channel ADC Signal

In this mode, a single input signal to be digitized is connected to the differential input pins, VIN+A and VIN–A. The 10-/12-bit output Rx data is latched using either CLKOUT1 or CLKOUT2 edges as defined in the Clock Overview section. The Rx path available options include bypassing the input buffer, Rx PGA control and using the Decimation Filter. By default, both Rx paths are enabled and the unused one should be powered down using the appropriate bit in the Rx Power-Down register, d1.

The input buffer description above explains the conditions under which the buffer should be bypassed.

If the input signal, or the undersampled alias signal for the IF sampling case, falls below 40% of the ADC Nyquist rate, the decimation filter can be enabled to suppress out-of-band noise and spurious signals by 40 dB or more. With the decimation filter enabled, the SNR of the Rx path improves by about 2.3 dB.

Dual Channel Real ADC Signal

The Dual Channel Real ADC Signal mode is used to receive diversity signals or dual independent channel signals that will be processed independent of each other. In this mode, the two input signals to be digitized are connected to the differential input pins of the AD9860/AD9862, VIN+A, VIN–A, VIN+B, and VIN–B. The two 10-/12-bit Rx outputs can be either interleaved onto a single 10-/12-bit bus or output in parallel on two 10-/12-bit buses.

The output will be latched using some configuration of CLKOUT1 or CLKOUT2 edges as defined in the Clock Overview section of the data sheet. The Rx path available options include bypassing the input buffer, RxPGA control and using the decimation filter.

The input buffer description above explains the conditions under which the buffer should be bypassed.

If the input signal, or the undersampled alias signal for the IF sampling case, falls below 40% of the ADC Nyquist rate, the decimation filter can be enabled to suppress out-of-band noise and spurious signals by 40 dB or more. With the decimation filter enabled the SNR of the Rx path improves by about 2.3 dB.

Dual Channel Complex ADC Signal

The Dual Channel Complex ADC Signal mode is used to receive baseband I and Q signals or a single sideband signal at some IF. In this mode, a complex input signal is generated from an external quadrature demodulator. The in-phase channel (I channel) is connected to VIN+A and VIN–A, and the Quadrature Data (Q channel) is connected to the VIN+B and VIN–B differential pins. The Rx path available options include bypassing the input buffer, RxPGA control, the decimation filter, and using the digital Hilbert filter. Shared Reference mode is also discussed below.

The RxPGA provides 0 dB to 20 dB gain control for both channels. The input buffer description above explains the conditions under which the buffer should be bypassed.

If the input signal, or the undersampled alias signal for the IF sampling case, falls below 40% of the ADC Nyquist rate, the decimation filter can be enabled to suppress out-of-band noise and spurious signals by 40 dB or more. With the decimation filter enabled, the SNR of the Rx path improves by about 2.3 dB.

A digital Hilbert filter can be enabled to provide a receive image rejection architecture on-chip. The digital Hilbert filter combines the I data and a phase shifted version of the Q data to produce a single combined Rx signal. The filter can provide 50 dB image suppression in the pass band (less than 0.1 dB ripple). The pass band of the filter is from 25% to 75% of Nyquist rate of the data entering the Hilbert filter. Note, the Hilbert filter's maximum input data rate is 32 MSPS, at ADC rates above 32 MSPS. The decimation filter is required to reduce the data rate. With the decimation filter also enabled, the pass band of the Hilbert filter will be 12.5% to 37.5% of the ADC Nyquist rate (still 25% to 75% of the Nyquist rate of the data entering the Hilbert filter).

An optional Shared Reference mode allows the user to connect the differential references from the dual ADC together externally for superior gain matching performance. To enable the Shared Reference mode, the Shared Ref register (d4, b1) should be set high.

TIMING GENERATION BLOCK

The AD9860/AD9862 Timing Generation block uses a single external clock reference to derive all internal clocks to operate the transmit and receive channels. The input clock reference can consist of either an external single ended clock applied to the OSC1 pin, with the OSC2 pin left floating or an external crystal connected between the clock input pins (OSC1 and OSC2).

By default, the AD9860/AD9862 can accept either an external reference clock or a crystal to generate the input clock. The internal oscillator, if not used, should be disabled by setting the Input Control Clock register. The OSC1 input impedance is a relatively high resistive impedance (typically, about 500 kΩ).

An internal Delay Lock Loop (DLL) based clock multiplier provides a low noise, 2× or 4× multiplication of the input clock over an output frequency range of 32 MHz to 128 MHz. The DLL Fast register should be used to optimize the DLL performance. For DLL output frequencies between 32 MHz and 64 MHz, this bit should be set low. For output frequencies between 64 MHz to 128 MHz, the Fast bit should be set high (for a 64 MHz output frequency, the register can be set either high or low). The DLL can be bypassed by setting a 1× multiplication factor in the DLL Multiplier register. The DLL can be powered down when it is bypassed for power savings by setting the DLL PwrDwn register.

For applications where an external crystal is desired, the AD9860/AD9862 internal oscillator circuit and the DLL clock multiplier enable a low frequency, lower cost quartz crystal to be used to generate the input reference clock. The quartz crystal would be connected between the OSC1 and OSC2 pins with parallel resonant load capacitors as specified by the crystal manufacturer.

An internal Duty Cycle Stabilizer (DCS) can be enabled on the AD9860 by setting the Clk Duty register. This provides a stable 50% duty cycle to the ADC for high speed clock rates between 40 MSPS to 64 MSPS when proper duty cycle is more critical.

System Clock Distribution Circuitry

There are many variables involved in the timing distribution. External variables include CLKIN, CLKOUT1, CLKOUT2, Rx Data Rate, Tx Data Rate. Internal variables include ADC conversion rate, DAC update rate, interpolation rate, decimation rate, Rx data multiplexing and Tx data demultiplexing. Many of these parameters are interrelated and based on CLKIN. Optimal power versus performance and ease of integration options can be chosen to suit a particular application.

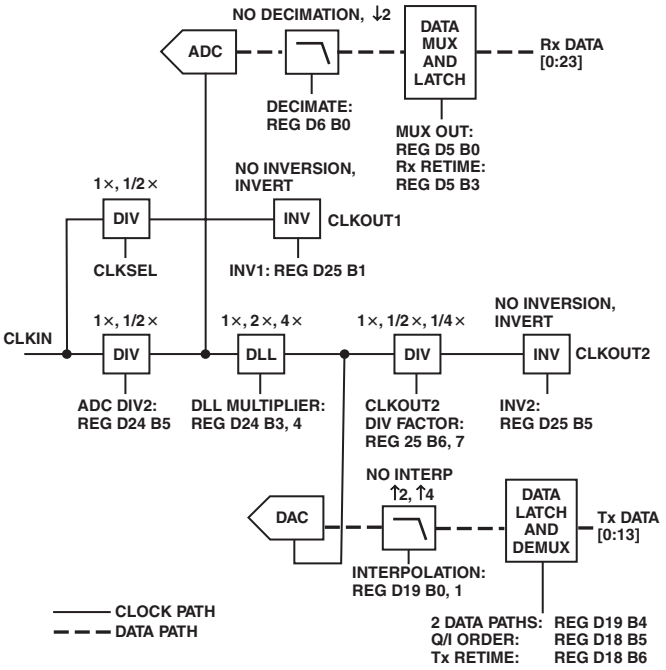

Figure 8. Normal Operation Timing Block Diagram

One of two possible timing operation modes can be selected. The typical timing mode is called Normal Operation mode; a block diagram is shown in Figure 8. The other mode is called Alternative Operation mode, and a block diagram is shown in Figure 12.

Table I. Rx Data Timing Table

Table Ia. CLKSEL Set Logic Low

CLKSEL	ADC Div 2	Decimate	Multiplex	See Figure 8 for Relative Timing
Low	No Div	No Decimation	No Mux	Timing No. 4 Rx Data = 2 × CLKOUT1 CLKOUT1 = 1/2 × CLKIN
			Mux	Not Allowed
		Decimation	No Mux	Timing No. 3 Rx Data = 2 × CLKOUT1 CLKOUT1 = 1/2 × CLKIN
			Mux	Timing No. 4 Rx Data(MUXED) = 2 × CLKOUT1 CLKOUT1 = 1/2 × CLKIN
	Div	No Decimation	No Mux	Timing No. 3 Rx Data = CLKOUT1 CLKOUT1 = 1/2 × CLKIN
			Mux	Timing No. 4 Rx Data(MUXED) = 2 × CLKOUT1 CLOUT1 = 1/2 × CLKIN
		Decimation	No Mux	Timing No. 2 Rx Data = 1/2 × CLKOUT1 CLOUT1 = 1/2 × CLKIN
			Mux	Timing No. 3 Rx Data(MUXED) = CLKOUT1 CLKOUT1 = 1/2 × CLKIN

Table Ib. CLKSEL Set Logic High

CLKSEL	ADC Div 2	Decimate	Multiplex	See Figure 8 for Relative Timing
High	No Div	No Decimation	No Mux	Timing No. 3 Rx Data = CLKOUT1 CLKOUT1 = CLKIN
			Mux	Timing No. 4 Rx Data(MUXED) = 2 × CLKOUT1 CLKOUT1 = CLKIN
		Decimation	No Mux	Timing No. 2 Rx Data = 1/2 × CLKOUT1 CLKOUT1 = CLKIN
			Mux	Timing No. 3 Rx Data(MUXED) = CLKOUT1 CLKOUT1 = CLKIN
	Div	No Decimation	No Mux	Timing No. 2 Rx Data = 1/2 × CLKOUT1 CLKOUT1 = CLKIN
			Mux	Timing No. 3 Rx Data(MUXED) = CLKOUT1 CLOUT1 = CLKIN
		Decimation	No Mux	Timing No. 1 Rx Data = 1/4 × CLKOUT1 CLOUT1 = CLKIN
			Mux	Timing No. 2 Rx Data(MUXED) = 1/2 × CLKOUT1 CLKOUT1 = CLKIN

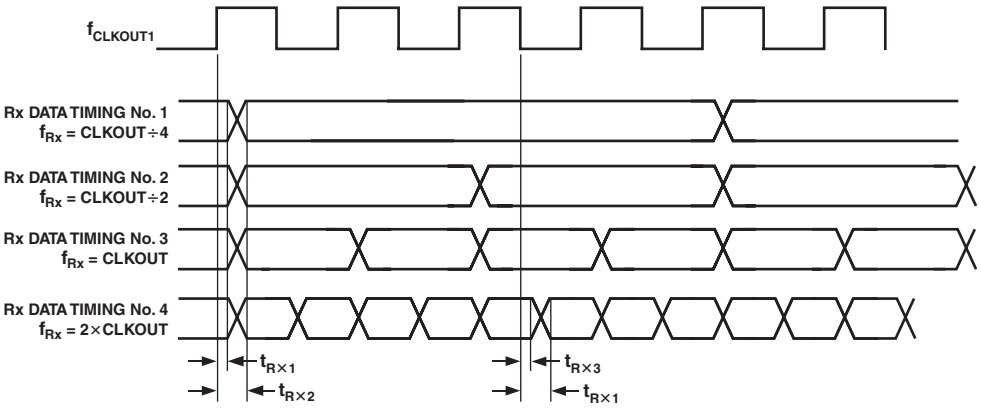

Figure 9. Rx Timing Diagram

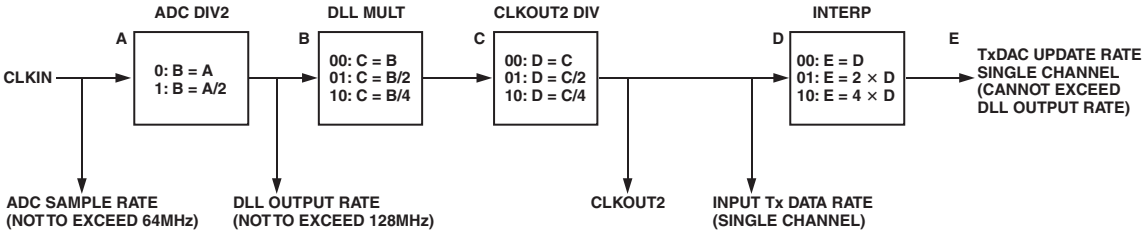

Figure 10. Single Tx Timing Block Diagram, Alternative Operation

For the Normal Operation mode, the Tx timing is based on a clock derived from the DLL output, while the Rx clock is unaffected by the DLL setting.

The Alternative Operation mode, timing utilizes the output of the DLL to generate both Rx and Tx clocks. It also sets default operation of the DLL to 4× mode.

Normal Operation is typically recommended because the Rx ADC is more sensitive to the jitter and noise that the DLL may generate, so its performance may degrade. The Mode/TxBlank pin logic level at power up or RESET defines in which mode the device powers up. If Mode/TxBlank is low at power up, the Normal Operation mode is configured. Otherwise, the Alternative Operation mode is configured.

Rx Path (Normal Operation)

The ADC sampling rate, the Rx data output rate, and the rate of CLKOUT1 (clock used to latch output data) are the parameters of interest for the receive path data. These parameters in addition to the data bandwidth are related to CLKIN by decimation filters, divide by two circuits, data multiplexer logic and retiming latches. The Rx path timing can be broken into two separate relationships: the ADC sample rate relative to the input clock, CLKIN and the output data rate relative to CLKOUT1.

The ADCs sample rate relative to CLKIN is controlled by the ADC Div2 register and the sample rate can be equal to or one half of the input clock rate.

The output data relative to CLKOUT1 has many configurations providing a flexible interface. The different options are shown in Figure 8. Table Ia and Ib describe the setup required to obtain the desired data timing. RxSync is available when the Rx data is decimated and multiplexed to identify which channel data is present at the output bus.

The Rx data (unless re-timed using the Rx Retime register) is timed relative to the CLKOUT1 pin output. The Rx output data can be decimated (halving the data rate) or both channels can be multiplexed onto the channel A data bus (doubling the data rate).

Decimation enables oversampling while maintaining a slower external data transfer rate and provides superior suppression of out of band signals and noise. Multiplexing enables fewer digital output bits to be used to transfer data from the Rx path to the digital ASIC collecting the data.

When Mux Mode is enabled with an output data rate equal to CLKOUT1 (Timing No. 3 in Figure 9) then the RxSync pin is required to identify which channel's output data is on the output data bus. RxSync output is aligned with the output data, and by default a logic low indicates data from Rx Channel B is currently on the output data bus. If RxSync is logic high, then data from Rx Channel A is currently on the output data bus. The Inv RxSync register can be used to switch this notation.

The CLKOUT1 pin outputs a clock at the frequency of CLKIN or CLKIN/2 depending on the voltage level applied to the CLKSEL pin. If a logic low is applied to CLKSEL, CLKOUT1 will run at half the CLKIN rate, if CLKSEL is set to logic high CLKOUT1 outputs a clock equal to CLKIN.

This timing flexibility along with the invert option for CLKOUT1, controlled by the Inv 1 register allow for various methods of latching data from the Rx path to the digital ASIC, which will process the data. These options are shown in Table Ia and Ib along with a timing diagram in Figure 9. Not shown is the option to invert CLKOUT1, controlled by the Inv 1 register. For this mode, relative timing remains the same except the opposite edges of CLKOUT1 would be used.

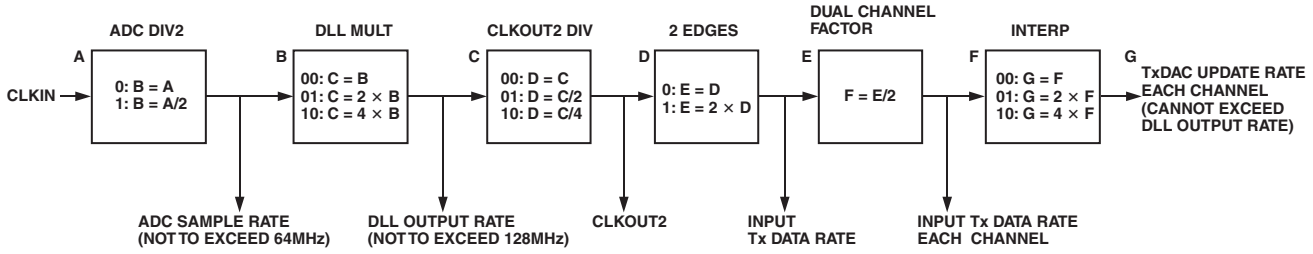

Figure 11. Dual Tx Timing Block Diagram, Alternative Operation

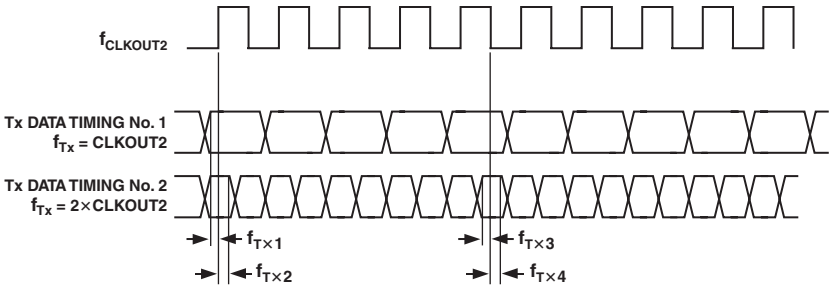

Figure 12. Tx Timing Diagram

Tx Path (Normal Operation)

The DAC update rate, the Tx input data rate, and the rate of CLKOUT2 (clock used to latch Tx input data) are the parameters of interest for the transmit path data. These parameters, in addition to the output signal bandwidth, are related to CLKIN by the settings of the ADC Div2, the DLL multiplier, the CLKOUT2 Div, the two edges, and the interpolation registers.

The Tx data is timed relative to the CLKOUT2 pin (unless it is retimed relative to CLKOUT1 by setting Tx Retime register) and the input Tx data is latched on either each rising edge, each falling edge or both edges (controlled through the Inverse Sample and two edges registers). The timing diagrams for these cases are shown in Figure 12.

The Dual Tx data is multiplexed onto a single bus so that fewer digital bits are necessary to transfer data. Throughout this discussion of Tx path timing, Tx digital processing options other than interpolation are ignored because they do not change data timing; Tx data timing reflects whether single or dual channel data is latched into the AD9860/AD9862.

The rates of CLKOUT2 (and the input data rate) are related to CLKIN by the DLL Multiplier Register, the setting of the CLKOUT2 Divide Factor Register and the register ADC Div2. These relationships are shown in Table II.

Table II. CLKOUT2 Timing Relative to CLKIN for Normal Operation Mode

CLK DIV2	DLL Mult	CLKOUT2 Div Factor	CLKOUT2
No Div	1×	/1	CLKIN
		/2	CLKIN/2
		/4	CLKIN/4
	2×	/1	2×CLKIN
		/2	CLKIN
		/4	CLKIN/2
	4×	/1	4×CLKIN
		/2	2×CLKIN
		/4	CLKIN
Div by 2	1×	/1	CLKIN/2
		/2	CLKIN/4
		/4	CLKIN/8
	2×	/1	CLKIN
		/2	CLKIN/2
		/4	CLKIN/4
	4×	/1	2×CLKIN
		/2	CLKIN
		/4	CLKIN/2

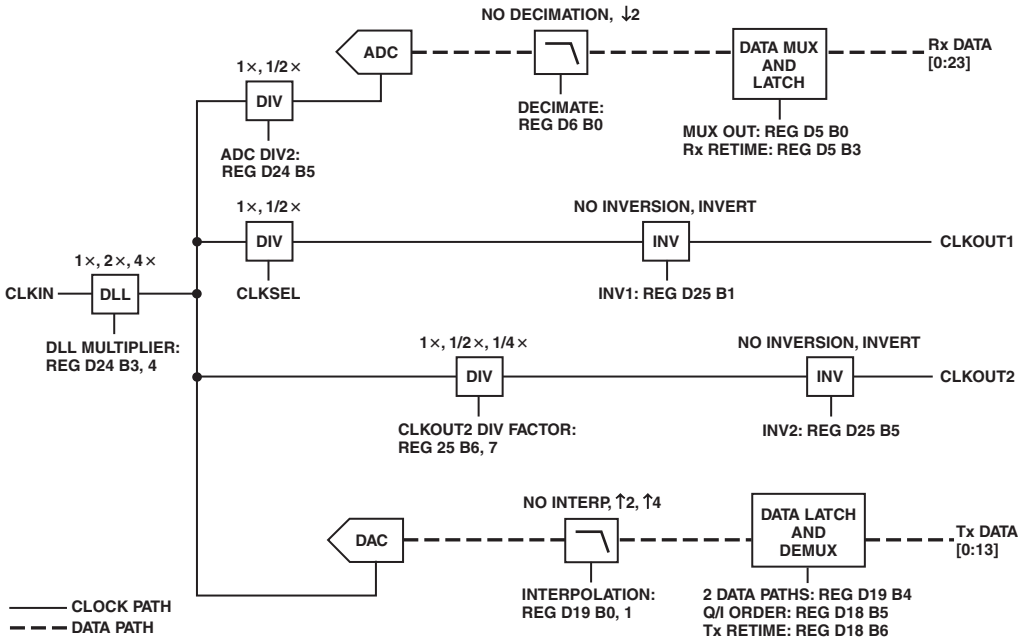

Figure 13. Alternative Operation Timing Block Diagram

The timing block diagrams in Figures 10 and 11 show how the various clocks of the single and dual Tx path are affected by the various register settings.

For dual Tx data, an option to redirect demultiplexed data to either path is available. For example, the AD9860/AD9862 can accept complex data in the form of I then Q data or Q then I data, controlled through QI Order register.

For the dual Tx data cases, the Tx_SYNC Pin input logic level defines what data is currently on the Tx data bus. By default, when Tx_SYNC is low, Channel A data (first of the set) should be on the data bus; if TxSYNC is high, Channel B data (or the second of the set) should be on the Tx bus. This can be reversed be setting the Inv TxSYNC register.

Rx Path (Alternative Timing Operation)

The ADC sampling rate, the Rx data output rate and the rate of CLKOUT1 (clock used to latch output data) are the parameters of interest for the receive path data. These parameters, in addition to the data bandwidth, are related to CLKIN by decimation filters, divide by two circuits, data multiplexer logic retiming latches and also the DLL multiplication setting (which is not the case for Normal Operation mode). This mode can be configured by default by forcing the Tx_Blank_In pin to a logic high level during power up.

The Rx path timing can be broken into two separate relationships: the ADC sample rate relative to the input clock, CLKIN and the output data rate relative to CLKOUT1.

The ADCs sample rate relative to CLKIN is controlled by the ADC Div2 register and the DLL Multiplier register. The sample rate can be equal to or one half of the DLL output clock rate.

The output data rate relative to CLKOUT1 for the Alternative Operation Mode has the same configuration options as in the Normal Operation Mode. The different options are shown in Figure 9. Table Ia. and Ib. describe the setup required to obtain the desired data timing.

The Rx data (unless retimed using the Rx Retime register) is timed relative to the CLKOUT1 pin output. The Rx output data can be decimated (halving the data rate) or both channels can be multiplexed onto the Channel A data bus (doubling the data rate).

Decimation enables oversampling while maintaining a slower external data transfer rate and provides superior suppression of out of band signals and noise. Multiplexing enables fewer digital output bits to be used to transfer data from the Rx path to the digital ASIC collecting the data.

When Multiplexing mode is enabled with an output data rate equal to CLKOUT1 (Timing No. 3 in Figure 9), then the RxSync pin is required to identify which channel's output data is on the output data bus. RxSync output is aligned with the output data and by default, a logic low indicates data from Rx Channel B is currently on the output data bus. If RxSync is logic high, then data from Rx Channel A is currently on the output data bus. The Inv RxSync register can be used to switch this notation.

The CLKOUT1 pin outputs a clock at a frequency of CLKIN or CLKIN/2 depending on the voltage level applied to the CLKSEL pin. If a logic low is applied to CLKSEL, CLKOUT1 will run at half the CLKIN rate; if CLKSEL is set to logic high, CLKOUT1 outputs a clock equal to CLKIN.

This timing flexibility, along with the invert option for CLKOUT1 controlled by the Inv 1 Register, allows for various methods of latching data from the Rx path to the digital ASIC, which will process the data. These options are shown in Table Ia and Ib along with a timing diagram in Figure 9. Not shown is the option to invert CLKOUT1, controlled by the Inv 1 register. For this mode, relative timing remains the same except the opposite edges of CLKOUT1 would be used.

Overall, relative timing can be found by using the Alternative Operation Mode Master Timing Guide in Table V and using Rx timing shown in Figure 9.

Tx Path (Alternative Timing Operation)

The DAC update rate, the Tx input data rate and the rate of CLKOUT2 (clock used to latch Tx input data) are the parameters of interest for the transmit path data. These parameters in addition to the output signal bandwidth are related to CLKIN by the settings of the DLL multiplier, the CLKOUT2 Div, the two edge and the Interpolation registers (in this mode, the ADC Div2 register does not affect Tx timing).

The Tx data is timed relative to the CLKOUT2 pin (unless it is retimed relative to CLKOUT1 by setting Tx Retime register) and remains the same as it does in Normal Operation Mode. The input Tx data is latched on each rising edge, each falling edge or both edges (controlled through the Inverse Sample and two edge registers). The timing diagrams for these cases are shown in Figure 12.

The Dual Tx data is multiplexed onto a single bus so that fewer digital bits are necessary to transfer data. Throughout this discussion of Tx path timing, Tx digital processing options other than interpolation are ignored because they do not change data timing; Tx data timing reflects whether single or dual channel data is latched into the AD9860/AD9862.

The rates of CLKOUT2 (and the input data rate) are related to CLKIN by the DLL Multiplier register and the setting of the CLKOUT2 Divide Factor register. These relationships are shown in Table III.

Table III. CLKOUT2 Timing Relative to CLKIN In Alternative Operation Mode

DLL Mult	CLKOUT2 Div Factor	CLKOUT2
1×	/1	CLKIN
	/2	CLKIN/2
	/4	CLKIN/4
2×	/1	2×CLKIN
	/2	CLKIN
	/4	CLKIN/2
4×	/1	4×CLKIN
	/2	2×CLKIN
	/4	CLKIN

Table IV. Normal Operation Mode Master Timing Guide

ADC2	DLL Mult	ADC Clock Rate	ADC Data Rate[1] (MSPS)				DAC Update Rate	Dual DAC Data Rate[2] (MSPS)			CLKOUT1		CLKOUT2		
			Non-MUX Mode		MUX Mode										
			No Deci	Deci by 2	No Deci	Deci by 2		1× Interp	2× Interp	4× Interp	CLKSEL = Low	CLKSEL = High	CLKDIV = 1×	CLKDIV = 1/2×	CLKDIV = 1/4×
0	1×	CLKIN	CLKIN	CLKIN ÷2	2× CLKIN	CLKIN	CLKIN	2× CLKIN	CLKIN	CLKIN ÷2	CLKIN	CLKIN ÷2	CLKIN	CLKIN ÷2	CLKIN ÷4
0	2×						2× CLKIN	4× CLKIN	2× CLKIN	CLKIN			2× CLKIN	CLKIN	CLKIN ÷2
0	4×						4× CLKIN	8× CLKIN	4× CLKIN	2× CLKIN			4× CLKIN	2× CLKIN	CLKIN
1	1×	CLKIN ÷2	CLKIN ÷2	CLKIN ÷4	CLKIN	CLKIN ÷2	CLKIN ÷2	CLKIN	CLKIN ÷2	CLKIN ÷4			CLKIN ÷2	CLKIN ÷4	CLKIN ÷8
1	2×						CLKIN	2× CLKIN	CLKIN	CLKIN ÷2			CLKIN	CLKIN ÷2	CLKIN ÷4
1	4×						2× CLKIN	4× CLKIN	2× CLKIN	CLKIN			2× CLKIN	CLKIN	CLKIN ÷2

NOTES
[1]100 MHz rate max.
[2] Single DAC data rate = 1/2 dual DAC data rate.

Table V. Alternative Operation Mode Master Timing Guide

ADC2	DLL Mult	ADC Clock Rate	ADC Data Rate[1] (MSPS)				DAC Update Rate	Dual DAC Data Rate[2] (MSPS)			CLKOUT1		CLKOUT2		
			Non-MUX Mode (two buses)		MUX Mode (one bus)										
			No Deci	Deci by 2	No Deci	Deci by 2		1× Interp	2× Interp	4× Interp	CLKSEL = Low	CLKSEL = High	CLKDIV = 1×	CLKDIV = 1/2×	CLKDIV = 1/4×
0	1×	CLKIN	CLKIN	CLKIN ÷2	2× CLKIN	CLKIN	CLKIN	2× CLKIN	CLKIN	CLKIN ÷2	CLKIN	CLKIN ÷2	CLKIN	CLKIN ÷2	CLKIN ÷4
0	2×	2× CLKIN	2× CLKIN	CLKIN	4× CLKIN	2× CLKIN	2× CLKIN	4× CLKIN	2× CLKIN	CLKIN	2× CLKIN	CLKIN	2× CLKIN	CLKIN	CLKIN ÷2
0	4×	4× CLKIN	4× CLKIN	2× CLKIN	8× CLKIN	4× CLKIN	4× CLKIN	8× CLKIN	4× CLKIN	2× CLKIN	4× CLKIN	2× CLKIN	4× CLKIN	2× CLKIN	CLKIN
1	1×	CLKIN ÷2	CLKIN ÷2	CLKIN ÷4	CLKIN	CLKIN ÷2	CLKIN	2× CLKIN	CLKIN	CLKIN ÷2	CLKIN	CLKIN ÷2	CLKIN	CLKIN ÷2	CLKIN ÷4
1	2×	CLKIN	CLKIN	CLKIN ÷2	2× CLKIN	CLKIN	2× CLKIN	4× CLKIN	2× CLKIN	CLKIN	2× CLKIN	CLKIN	2× CLKIN	CLKIN	CLKIN ÷2
1	4×	2× CLKIN	2× CLKIN	CLKIN	4× CLKIN	2× CLKIN	4× CLKIN	8× CLKIN	4× CLKIN	2× CLKIN	4× CLKIN	2× CLKIN	4× CLKIN	2× CLKIN	CLKIN

NOTES
[1]100 MHz rate max.
[2] Single DAC data rate = 1/2 dual DAC data rate.

The timing block diagrams in Figures 14 and 15 show how the various clocks of the single and dual Tx path are affected by the various register settings.

For dual Tx data, an option to redirect demultiplexed data to either path is available. For example, the AD9860/AD9862 can accept complex data in the form of I then Q data or Q then I data, controlled through QI Order register.

For the dual Tx data cases, the Tx_SYNC pin input logic level defines what data is currently on the Tx data bus. By default, when Tx_SYNC is low, Channel A data (first of the set) should be on the data bus. If TxSYNC is high, Channel B data (or the second of the set) should be on the Tx bus. This can be reversed by setting the Inv TxSYNC register.

ADDITIONAL FEATURES

In addition to the features mentioned above in the transmit, receive and clock paths, the AD9860/AD9862 also integrates components typically required in communication systems. These components include auxiliary analog-to-digital converters (AUX ADC), auxiliary digital-to-analog converters (AUX DAC), and a sigma-delta output.

Auxiliary ADC

Two auxiliary 10-bit SAR ADCs are available for various external signals throughout the system, such as a Receive Signal Strength Indicator (RSSI) function or Temperature Indicator. The auxiliary ADCs can convert at rates up to 1.25 MSPS and have a bandwidth of around 200 kHz. The two auxiliary ADCs (AUX ADC A and AUX ADC B) have multiplexed inputs, so that up to four system signals can be monitored.

The AUX ADC A multiplexer controls whether pin AUX_ADC_A1 or pin AUX_ADC_A2 is connected to the input of Auxiliary ADC A. The multiplexer is programmed through Register D34 B1, SelectA. By default, the register is low, which connects the AUX_ADC_A2 Pin to the input. Similarly, AUX ADC B has a multiplexed input controlled by Register D34 B4, SelectB. The default setting for SelectB is low, which connects the AUX_ADC_B2 input pin to AUX ADC B. If the SelectA or SelectB register bit is set high, then the AUX_ADC_A1 Pin or the AUX_ADC_B1 pin is connected to the respective AUX ADC input.

An internal reference buffer provides a full-scale reference for both of the auxiliary ADCs that is equal to the supply voltage for the auxiliary ADCs. An external full-scale reference can be applied to either or both of the AUX ADCs by setting the appropriate bit(s), RefselB for the AUX ADC B and Refsel A for the AUX ADC B in the Register Map. Setting either or both of these bits high will disconnect the internal reference buffer and enable the externally applied reference from the AUX_REF Pin to the respective channel(s).

Timing for the auxiliary ADCs is generated from a divided down Rx ADC clock. The divide down ratio is controlled by register D35 B0, CLK/4 and is used to maintain a maximum clock rate of 20 MHz. By default, CLK/4 is set low dividing the Rx ADC clock by 2; this is acceptable when running the Rx ADC at rate of 40 MHz or less. At Rx ADC rate greater than 40 MHz, the CLK/4 register bit should be set high and will divide the Rx ADC clock by 4 to derive the auxiliary ADC Clock. The conversion time, including setup, takes 16 clock cycles (16 Rx ADC clock cycles); when CLK/4 is set low, divide by 2 mode, or 32 clock cycles when CLK/4 is set high.

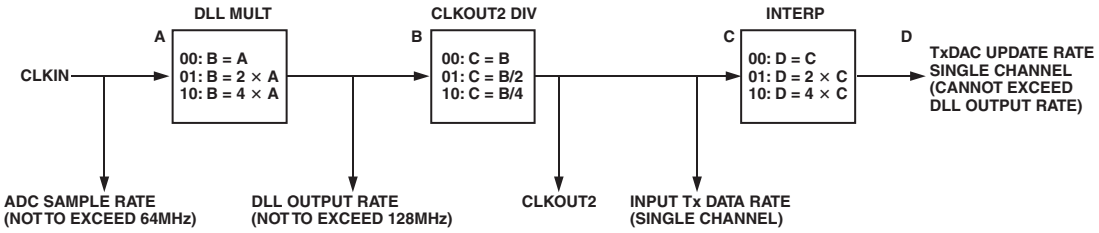

Figure 14. Single Tx Timing Block Diagram, Alternative Operation

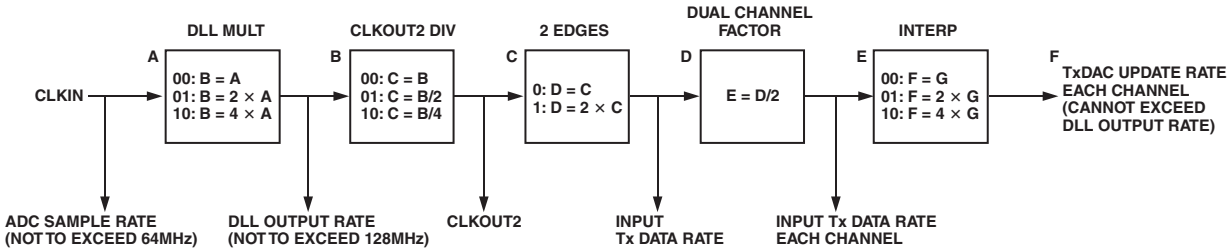

Figure 15. Dual Tx Timing Block Diagram, Alternative Operation

Conversion is initiated by writing a logic high to one or both of the Start register bits, Register D34 B0 (StartA) and D34 B3 (StartB). When the conversion is complete, the straight binary, 10-bit output data of the AUX ADC is written to one of four reserved locations in the register map depending on which auxiliary ADC and which multiplexed input is selected. Because the auxiliary ADCs output 10 bits, two register addresses are needed for each data location.

Initiating a conversion or retrieving data can also be accomplished either through the standard Serial Port Interface by reading and writing to the appropriate registers or through a dedicated Auxiliary Serial Port Interface (AUX SPI). The AUX SPI can be configured to allow fast access and control of either one of the auxiliary ADCs and is available so that the SPI is not tied up retrieving auxiliary ADC data.

The AUX SPI can be enabled and configured by setting register AUX ADC CTRL. Setting register use pins high enables the AUX SPI port. Setting register Sel BnotA low connects auxiliary ADC A to the AUX SPI port, while setting it high connects auxiliary ADC B to the AUX SPI port. As mentioned above, setting the appropriate Select bit selects which of the multiplexed input is connected to the auxiliary ADC.

The AUX SPI consists of a chip select pin (AUX_SPI_csb), a clock pin (AUX_SPI_clk), and a data output pin (AUX_SPI_do). A conversion is initiated by pulsing the AUX_SPI_csb pin low. When the conversion is complete, the data pin, AUX_SPI_do, previously a logic low, will go high. At this point, the user supplies an external clock, previously tied low, no data is present on the first rising edge. The data output bit is updated on the falling edge of the clock pulse and is settled and can be latched on the next clock rising edge. The data arrives serially, MSB first. The AUX SPI runs up to a rate of 16 MHz.

AUX DAC

The AD9860/AD9862 has three 8-bit voltage output auxiliary DACs, AUX DACs. The AUX DACs are available for supplying various control voltages throughout the system such as a VCXO voltage control or external VGA gain control and can typically sink or source up to 1 mA.

An internal voltage reference buffer provides a full-scale voltage reference for both of the AUX DACs equal to the supply voltage for the AUX DACs. The straight binary input codes are written to the appropriate registers. If the Slave Mode register bit is high, slave mode enabled, the AUX DAC(s) update will occur when the appropriate update register is written to. Otherwise, the update will occur at the conclusion of the data being written to the register. Typical maximum settling time for the auxiliary DAC is around 6 µs.

Other optional controls include an invert register control and a power down option. The invert register control, i.e., instead of hexFF being high and hex00 being low, hex00 is high, and hexFF will be minimum setting.

Sigma-Delta

A 12-bit sigma-delta (SD) output is available to provide an additional control voltage. The SD control word is written to Registers D42, 43; SD [11:4] are the 8 MSBs and SD [3:0] are the 4 LSBs. The 12-bit word is processed by a sigma-delta modulator and produces 1-bit data at an oversampled rate equal to 1/8 of the receive ADC's sampling rate (up to 8 MSPS). The 1-bit data then feeds a 1-bit DAC. The 1-bit DAC exhibits perfect linearity. An external low-pass filter at the output should be used to low-pass filter the pulse modulated data to produce a linear output control voltage.

OUTLINE DIMENSIONS

128-Lead Plastic Quad Flatpack [LQFP]
(ST-128B)

Dimensions shown in millimeters

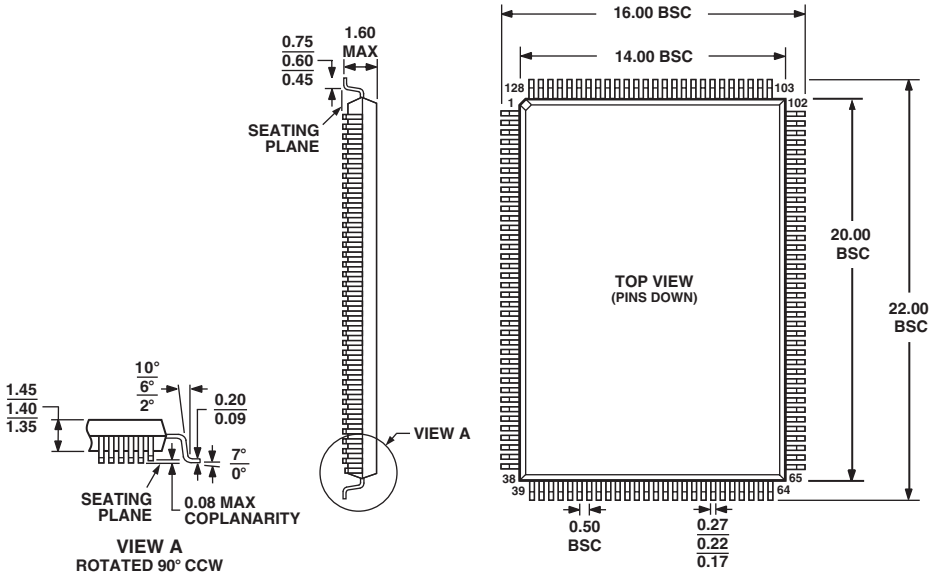

COMPLIANT TO JEDEC STANDARDS MS-026BHB

C02970–0–11/02(0)

PRINTED IN U.S.A.

НИОКР СИСТЕМС

ООО «НИОКРсистемс» - это оперативные поставки широкого спектра электронных компонентов отечественного и импортного производства напрямую от производителей и с крупнейших мировых складов. Реализуемая нашей компанией продукция насчитывает более полумиллиона наименований.

Благодаря этому наша компания предлагает к поставке практически не ограниченный ассортимент компонентов как оптовыми, мелкооптовыми партиями, так и в розницу.

Благодаря развитой сети поставщиков, помогаем в поиске и приобретении экзотичных или снятых с производства компонентов.

Наша компания это:

- Гарантия качества поставляемой продукции
- Широкий ассортимент
- Минимальные сроки поставок
- Техническая поддержка
- Подбор комплектации
- Индивидуальный подход
- Гибкое ценообразование
- Работаем по 275 ФЗ

ООО «НИОКР СИТЕМС»
Москва, 125362, Россия, ул. Вишневая, д. 9, к. 1, Блок 104 а и 104 в

Телефон: 8 (495) 268-14-82
Email: n@nsistems.ru

ИНН: 7735154786
ОГРН: 1167746717709