FAN1117A

1A Adjustable/Fixed Low Dropout Linear Regulator

Features

- Low dropout voltage
- Load regulation: 0.05% typical
- Trimmed current limit
- On-chip thermal limiting
- Standard SOT-223, TO-220, and TO-252 packages
- Three-terminal adjustable or fixed 1.8V, 2.5V, 2.85V, 3.3V, 5V

Applications

- Active SCSI terminators
- High efficiency linear regulators
- Post regulators for switching supplies
- Battery chargers
- 12V to 5V linear regulators
- Motherboard clock supplies

Description

The FAN1117A and FAN1117A-1.8, -2.5, -2.85, -3.3 and -5 are low dropout three-terminal regulators with 1A output current capability. These devices have been optimized for low voltage where transient response and minimum input voltage are critical. The 2.85V version is designed specifically to be used in Active Terminators for SCSI bus.

Current limit is trimmed to ensure specified output current and controlled short-circuit current. On-chip thermal limiting provides protection against any combination of overload and ambient temperatures that would create excessive junction temperatures.

Unlike PNP type regulators where up to 10% of the output current is wasted as quiescent current, the quiescent current of the FAN1117A flows into the load, increasing efficiency.

The FAN1117A series regulators are available in the industry-standard SOT-223, TO-220, and TO-252 (DPAK) power packages.

Typical Applications

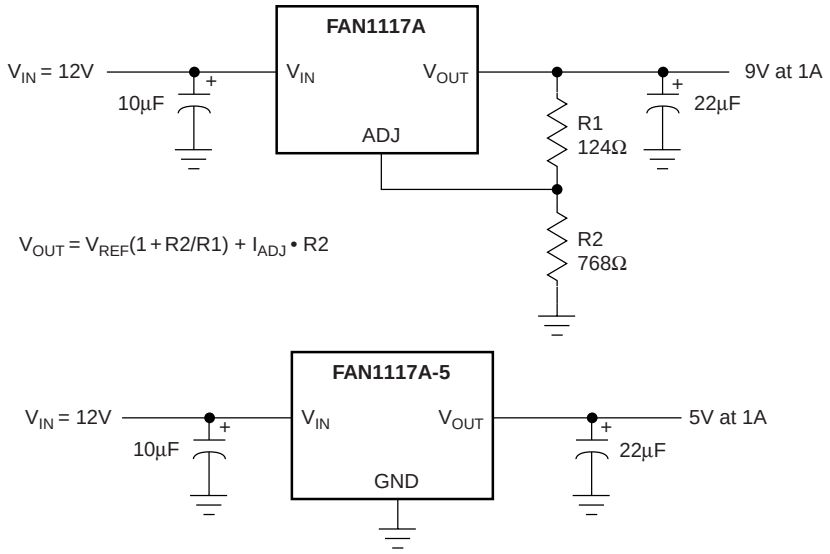

Pin Assignments

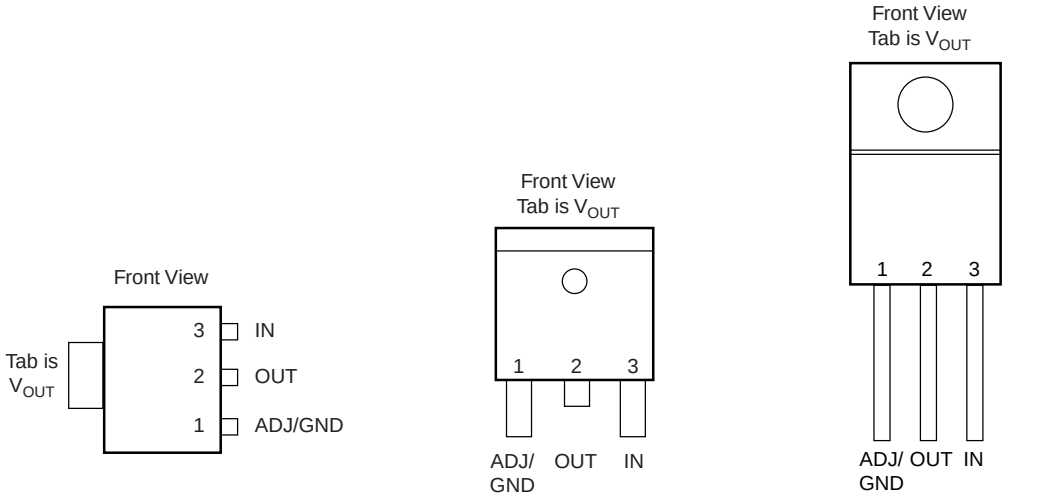

4-Lead Plastic SOT-223
Θ_{JC} = 15°C/W*

3-Lead Plastic TO-252
Θ_{JC} = 3°C/W*

3-Lead Plastic TO-220
Θ_{JC} = 3°C/W*

*With package soldered to 0.5 square inch copper area over backside ground plane or internal power plane, Θ_{JA} can vary from 30°C/W to more than 50°C/W. Other mounting techniques may provide better thermal resistance than 30°C/W.

Absolute Maximum Ratings

Parameter	Min.	Max.	Unit
V_{IN}		18	V
$(V_{IN} - V_{OUT}) * I_{OUT}$		See Figure 1	
Operating Junction Temperature Range	0	125	°C
Storage Temperature Range	-65	150	°C
Lead Temperature (Soldering, 10 sec.)		300	°C

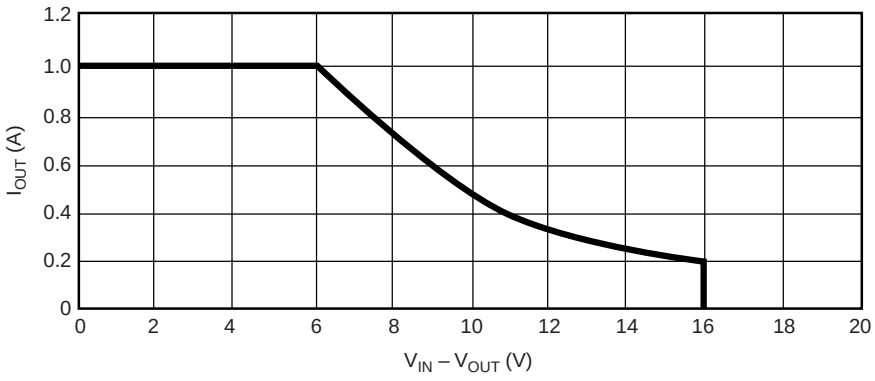

Figure 1. Absolute Maximum Safe Operating Area

Electrical Characteristics

Operating Conditions: $V_{IN} \leq 7V$, $T_J = 25°C$ unless otherwise specified.

The • denotes specifications which apply over the specified operating temperature range.

Parameter	Conditions		Min.	Typ.	Max.	Units
Reference Voltage[3]	$1.5V \leq (V_{IN} - V_{OUT}) \leq 7V$, $10mA \leq I_{OUT} \leq 1A$	•	1.225 (-2%)	1.250	1.275 (+2%)	V
Output Voltage[4]	$10mA \leq I_{OUT} \leq 1A$					
	FAN1117A-1.8, $3.3V \leq V_{IN} \leq 8.8V$	•	1.764	1.8	1.836	V
	FAN1117A-2.5, $4V \leq V_{IN} \leq 9.5V$	•	2.450	2.5	2.550	V
	FAN1117A-2.85, $4.35V \leq V_{IN} \leq 9.85V$	•	2.793	2.85	2.907	V
	FAN1117A-3.3, $4.8V \leq V_{IN} \leq 10.3V$	•	3.234	3.3	3.366	V
	FAN1117A-5, $6.5V \leq V_{IN} \leq 12V$	•	4.900	5.0	5.100	V
Line Regulation[1,2]	$(V_{OUT} + 1.5V) \leq V_{IN} \leq 12V$, $I_{OUT} = 10mA$	•		0.005	0.2	%
Load Regulation[1,2]	$(V_{IN} - V_{OUT}) = 2V$, $10mA \leq I_{OUT} \leq 1A$	•		0.05	0.5	%
Dropout Voltage	$\Delta V_{REF} = 1\%$, $I_{OUT} = 1A$	•		1.100	1.200	V
Current Limit	$(V_{IN} - V_{OUT}) = 2V$	•	1.1	1.5		A
Adjust Pin Current[3]		•		35	120	µA
Adjust Pin Current Change[3,4]	$1.5V \leq (V_{IN} - V_{OUT}) \leq 7V$, $10mA \leq I_{OUT} \leq 1A$	•		0.2	5	µA
Minimum Load Current	$1.5V \leq (V_{IN} - V_{OUT}) \leq 15V$	•	10			mA
Quiescent Current	$V_{IN} = V_{OUT} + 1.25V$	•		4	13	mA
Ripple Rejection	f = 120Hz, C_{OUT} = 22µF Tantalum, $(V_{IN} - V_{OUT}) = 3V$, $I_{OUT} = 1A$		60	72		dB
Thermal Regulation	$T_A = 25°C$, 30ms pulse			0.004	0.02	%/W
Temperature Stability		•		0.5		%
Long-Term Stability	$T_A = 125°C$, 1000hrs.			0.03	1.0	%
RMS Output Noise (% of V_{OUT})	$T_A = 25°C$, $10Hz \leq f \leq 10kHz$			0.003		%
Thermal Resistance, Junction to Case	SOT-223			15		°C/W
	TO-252, TO-220			3		°C/W
Thermal Shutdown	Junction Temperature			155		°C
Thermal Shutdown Hysteresis				10		°C

Notes:

1. See thermal regulation specifications for changes in output voltage due to heating effects. Load and line regulation are measured at a constant junction temperature by low duty cycle pulse testing.
2. Line and load regulation are guaranteed up to the maximum power dissipation (18W). Power dissipation is determined by input/output differential and the output current. Guaranteed maximum output power will not be available over the full input/output voltage range.
3. FAN1117A only.
4. Output current must be limited to meet the absolute maximum ratings of the part.

Typical Performance Characteristics

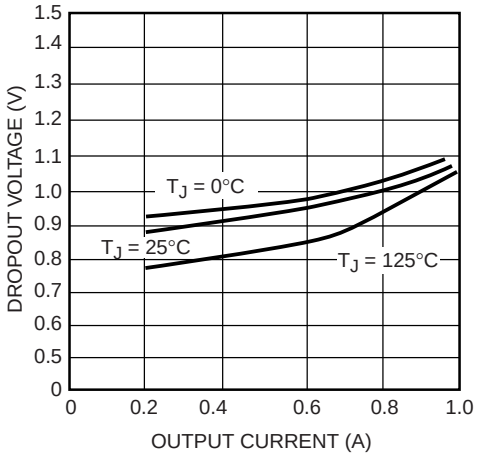

Figure 2. Dropout Voltage vs. Output Current

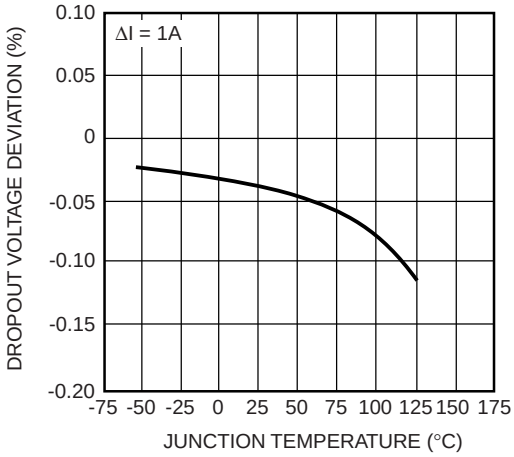

Figure 3. Load Regulation vs. Temperature

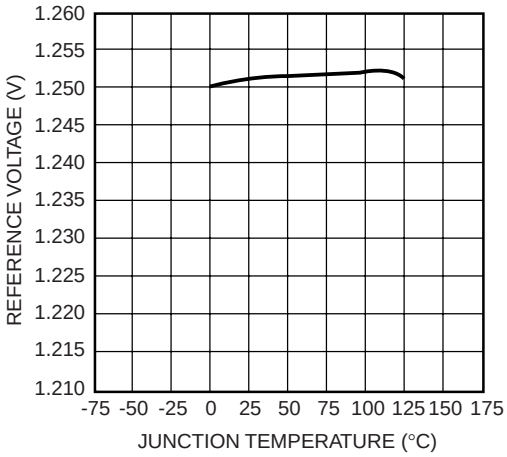

Figure 4. Reference Voltage vs. Temperature

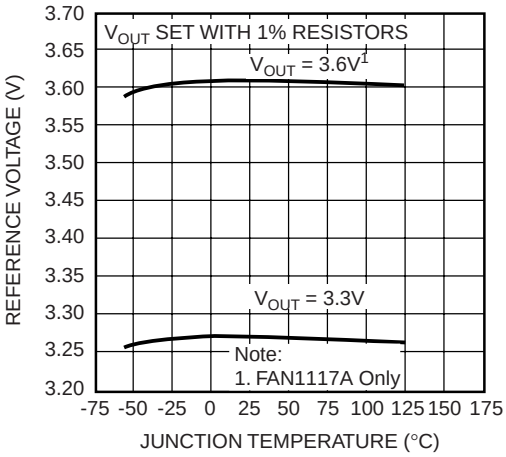

Figure 5. Output Voltage vs. Temperature

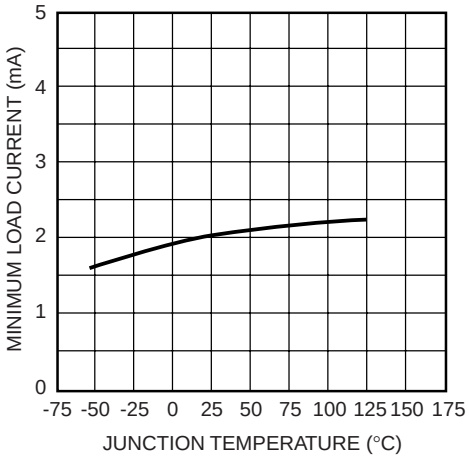

Figure 6. Minimum Load Current vs. Temperature

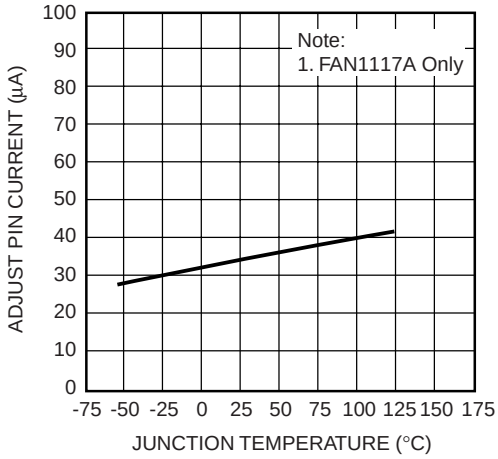

Figure 7. Adjust Pin Current vs. Temperature

Typical Performance Characteristics (continued)

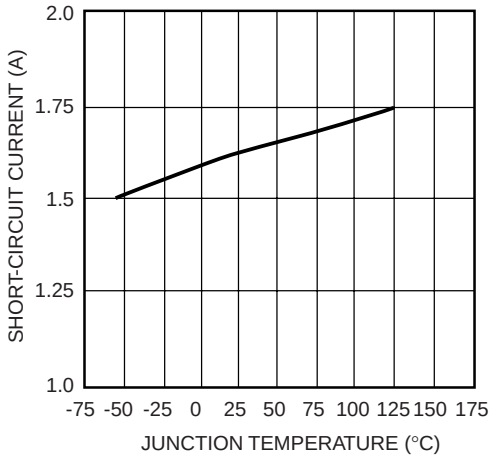

Figure 8. Short-Circuit Current vs. Temperature

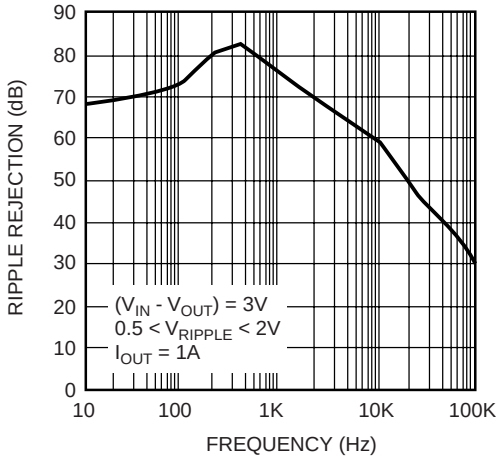

Figure 9. Ripple Rejection vs. Frequency

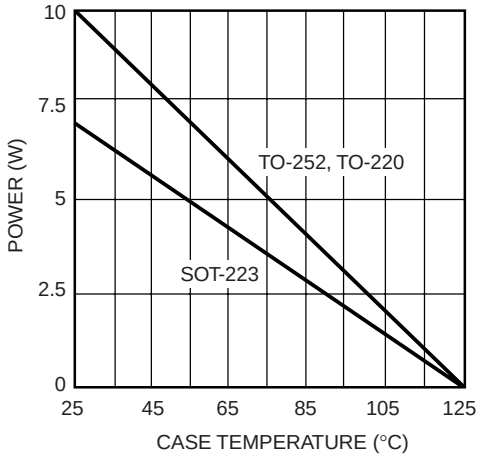

Figure 10. Maximum Power Dissipation

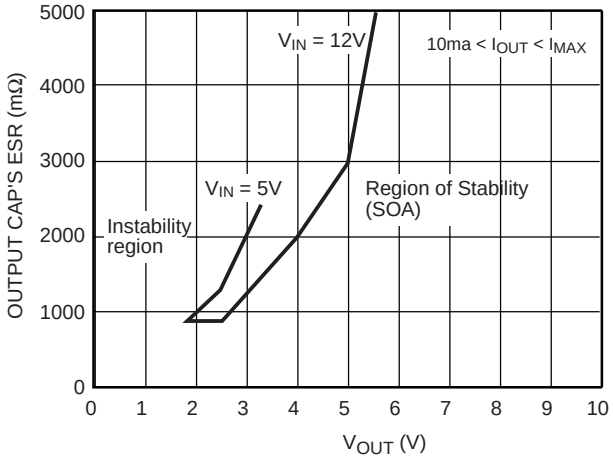

Figure 11. Stability Region (SOA) vs. ESR of the C_{OUT}

Mechanical Dimensions

4-Lead SOT-223 Package

Symbol	Inches		Millimeters		Notes
	Min.	Max.	Min.	Max.	
A	—	.071	—	1.80	
A1	—	.181	—	4.80	
B	.025	.033	.640	.840	
c	—	.090	—	2.29	
D	.248	.264	6.30	6.71	
E	.130	.148	3.30	3.71	
e	.115	.124	2.95	3.15	
F	.033	.041	.840	1.04	
H	.264	.287	6.71	7.29	
I	.012	—	.310	—	
J	—	10°	—	10°	
K	10°	16°	10°	16°	
L	.0008	.0040	.0203	.1018	
M	10°	16°	10°	16°	
N	.010	.014	.250	.360	

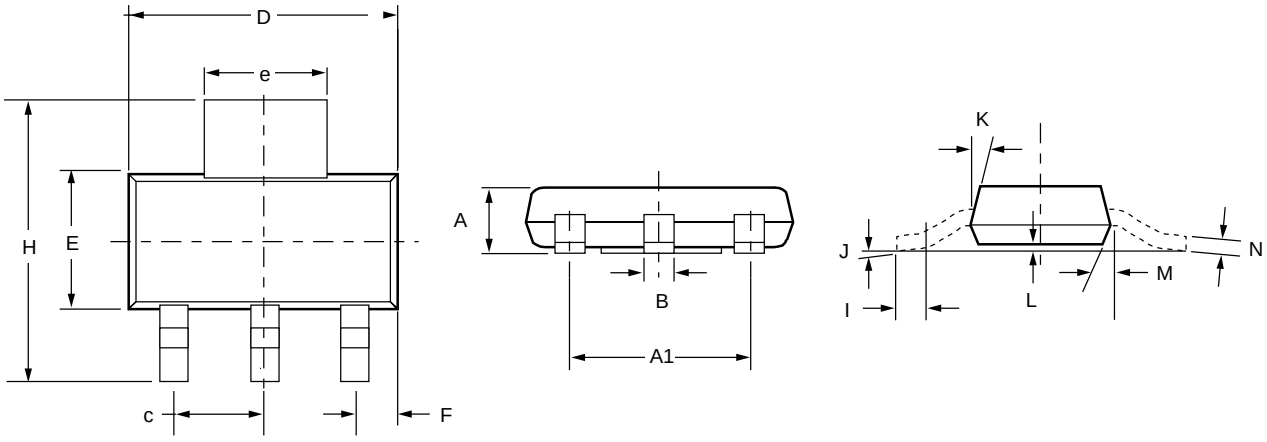

Mechanical Dimensions (continued)

3-Lead TO-220 Package

Symbol	Inches		Millimeters		Notes
	Min.	Max.	Min.	Max.	
A	.140	.190	3.56	4.83	
b	.015	.040	.38	1.02	
b1	.045	.070	1.14	1.78	
c1	.014	.022	.36	.56	
øP	.139	.161	3.53	4.09	
D	.560	.650	14.22	16.51	
E	.380	.420	9.65	10.67	
e	.090	.110	2.29	2.79	
e1	.190	.210	4.83	5.33	
e3	.045	—	1.14	—	
F	.020	.055	.51	1.40	
H1	.230	.270	5.94	6.87	
J1	.080	.115	2.04	2.92	
L	.500	.580	12.70	14.73	
L1	.250 BSC		6.35 BSC		
Q	.100	.135	2.54	3.43	
α	3°	7°	3°	7°	

Notes:
1. Dimension c1 apply for lead finish.

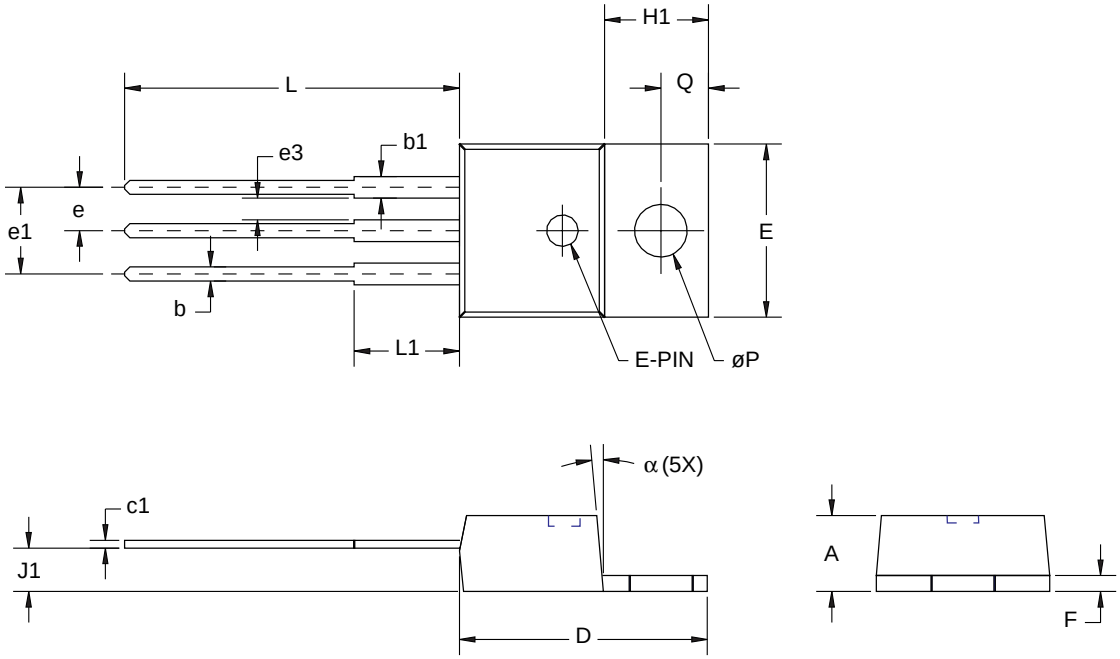

Mechanical Dimensions (continued)

3-Lead TO-252 Package

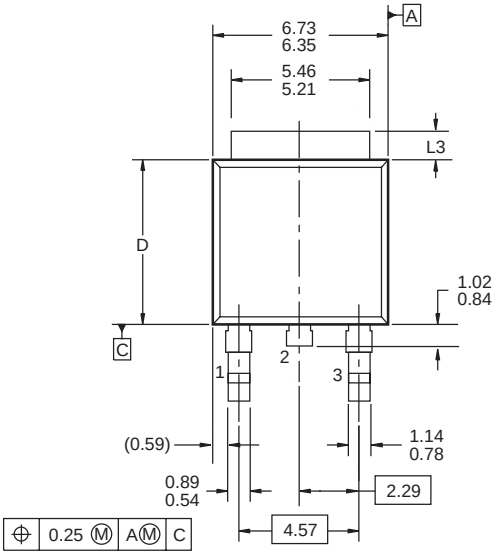

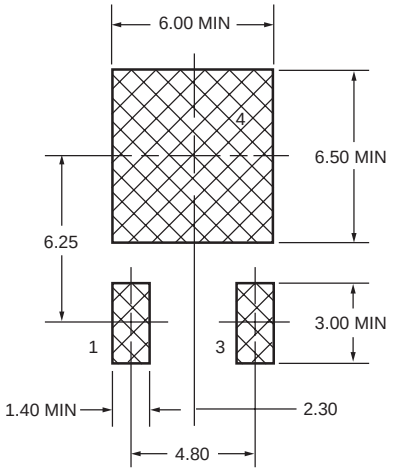

LAND PATTERN RECOMMENDATION

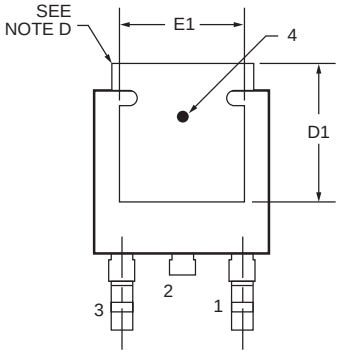

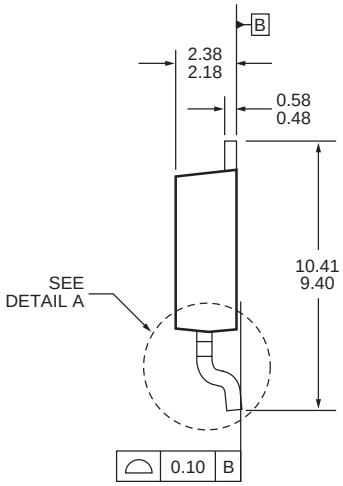

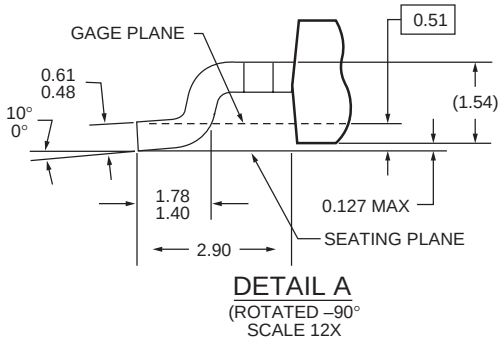

DETAIL A
(ROTATED –90°
SCALE 12X

NOTES: UNLESS OTHERWISE SPECIFIED

A) ALL DIMENSIONS ARE IN MILLIMETERS.

B) THIS PACKAGE CONFORMS TO JEDEC, TO-252, ISSUE C. VARIATION AA & AB, DATED NOV. 1999.

C) DIMENSIONING AND TOLERANCING PER ASME Y14.5–1994.

D) HEAT SINK TOP EDGE COULD BE IN CHAMFERED CORNERS OR EDGE PROTRUSION.

E) DIMENSIONS L3, D, E1 & D1 TABLE:

	OPTION AA	OPTION AB
L3	0.89 – 1.27	1.52 – 2.03
D	5.97 – 6.22	5.33 – 5.59
E1	4.32 MIN	3.81 MIN
D1	5.21 MIN	4.57 MIN

Ordering Information

Product Number	Package
FAN1117ADX	TO-252 in tape and reel
FAN1117ASX	SOT-223 in tape and reel
FAN1117AD18X	TO-252 in tape and reel
FAN1117AS18X	SOT-223 in tape and reel
FAN1117AD25X	TO-252 in tape and reel
FAN1117AS25X	SOT-223 in tape and reel
FAN1117AD285	TO-252
FAN1117AS285	SOT-223
FAN1117AD33X	TO-252 in tape and reel
FAN1117AS33X	SOT-223 in tape and reel
FAN1117AT	TO-220
FAN1117AT18	TO-220
FAN1117AT25	TO-220
FAN1117AT33	TO-220
FAN1117AD5X	TO-252 in tape and reel
FAN1117AS5X	SOT-223 in tape and reel

DISCLAIMER

FAIRCHILD SEMICONDUCTOR RESERVES THE RIGHT TO MAKE CHANGES WITHOUT FURTHER NOTICE TO ANY PRODUCTS HEREIN TO IMPROVE RELIABILITY, FUNCTION OR DESIGN. FAIRCHILD DOES NOT ASSUME ANY LIABILITY ARISING OUT OF THE APPLICATION OR USE OF ANY PRODUCT OR CIRCUIT DESCRIBED HEREIN; NEITHER DOES IT CONVEY ANY LICENSE UNDER ITS PATENT RIGHTS, NOR THE RIGHTS OF OTHERS.

LIFE SUPPORT POLICY

FAIRCHILD'S PRODUCTS ARE NOT AUTHORIZED FOR USE AS CRITICAL COMPONENTS IN LIFE SUPPORT DEVICES OR SYSTEMS WITHOUT THE EXPRESS WRITTEN APPROVAL OF THE PRESIDENT OF FAIRCHILD SEMICONDUCTOR CORPORATION. As used herein:

1. Life support devices or systems are devices or systems which, (a) are intended for surgical implant into the body, or (b) support or sustain life, and (c) whose failure to perform when properly used in accordance with instructions for use provided in the labeling, can be reasonably expected to result in a significant injury of the user.
2. A critical component in any component of a life support device or system whose failure to perform can be reasonably expected to cause the failure of the life support device or system, or to affect its safety or effectiveness.

© 2003 Fairchild Semiconductor Corporation

НИОКР СИСТЕМС

ООО «НИОКРсистемс» - это оперативные поставки широкого спектра электронных компонентов отечественного и импортного производства напрямую от производителей и с крупнейших мировых складов. Реализуемая нашей компанией продукция насчитывает более полумиллиона наименований.

Благодаря этому наша компания предлагает к поставке практически не ограниченный ассортимент компонентов как оптовыми, мелкооптовыми партиями, так и в розницу.

Благодаря развитой сети поставщиков, помогаем в поиске и приобретении экзотичных или снятых с производства компонентов.

Наша компания это:

- Гарантия качества поставляемой продукции
- Широкий ассортимент
- Минимальные сроки поставок
- Техническая поддержка
- Подбор комплектации
- Индивидуальный подход
- Гибкое ценообразование
- Работаем по 275 ФЗ

ООО «НИОКР СИТЕМС»
Москва, 125362, Россия, ул. Вишневая, д. 9, к. 1, Блок 104 а и 104 в

Телефон: 8 (495) 268-14-82
Email: n@nsistems.ru

ИНН: 7735154786
ОГРН: 1167746717709