DS1500
Y2K Watchdog RTC with Nonvolatile Control

www.maxim-ic.com

GENERAL DESCRIPTION

The DS1500 is a full-function, year 2000-compliant real-time clock/calendar (RTC) with an alarm, watchdog timer, power-on reset, battery monitors, 256 bytes of on-board nonvolatile (NV) SRAM, NV control for backing up an external SRAM, and a 32.768kHz output. User access to all registers within the DS1500 is accomplished with a byte-wide interface, as shown in Figure 7. The RTC registers contain century, year, month, date, day, hours, minutes, and seconds data in 24-hour binary-coded decimal (BCD) format. Corrections for day of month and leap year are made automatically.

APPLICATIONS

Remote Systems
Battery-Backed Systems
Telecom Switches
Office Equipment
Consumer Electronics

Pin Configuration and Typical Operating Circuit appear at end of data sheet.

FEATURES

- **BCD-Coded Century, Year, Month, Date, Day, Hours, Minutes, and Seconds with Automatic Leap-Year Compensation Valid Up to the Year 2100**
- **Programmable Watchdog Timer and RTC Alarm**
- **Century Register; Y2K-Compliant RTC**
- **Automatic Battery Backup and Write Protection to External SRAM**
- **+5V Operation**
- **Precision Power-On Reset**
- **Power-Control Circuitry Supports System Power-On from Date/Day/Time Alarm or Key Closure**
- **256 Bytes User NV RAM**
- **Auxiliary Battery Input**
- **Accuracy Better than ±1 Minute/Month at +25°C**
- **Day-of-Week/Date Alarm Register**
- **Battery Voltage-Level Indicator Flags**
- **Industrial Temperature Range: -40°C to +85°C**

ORDERING INFORMATION

PART	TEMP RANGE	VOLTAGE (V)	PIN-PACKAGE	TOP MARK*
DS1500WE	0°C to +70°C	3.3	32 TSOP	DS1500W
DS1500WE+	0°C to +70°C	3.3	32 TSOP	DS1500W
DS1500WEN	-40°C to +85°C	3.3	32 TSOP	DS1500WN
DS1500WEN+	-40°C to +85°C	3.3	32 TSOP	DS1500WN
DS1500YE	0°C to +70°C	5.0	32 TSOP	DS1500Y
DS1500YE+	0°C to +70°C	5.0	32 TSOP	DS1500Y
DS1500YEN	-40°C to +85°C	5.0	32 TSOP	DS1500YN
DS1500YEN+	-40°C to +85°C	5.0	32 TSOP	DS1500YN
DS1500YN	-40°C to +85°C	5.0	32 TSOP	DS1500Y

+ Denotes a lead-free/RoHS-compliant device.

** A "+" anywhere on the top mark indicates a lead-free/RoHS-compliant device. An "N" indicates an industrial temperature range device.*

***Note:** Some revisions of this device may incorporate deviations from published specifications known as errata. Multiple revisions of any device may be simultaneously available through various sales channels. For information about device errata, click here: www.maxim-ic.com/errata.*

ABSOLUTE MAXIMUM RATINGS

Voltage Range on Any Pin Relative to Ground……..-0.5V to +6.0V
Operating Temperature Range……-40°C to +85°C (Note 1)
Storage Temperature Range……-55°C to +125°C
Soldering Temperature……See IPC/JEDEC J-STD-020 Specification

Stresses beyond those listed under "Absolute Maximum Ratings" may cause permanent damage to the device. These are stress ratings only, and functional operation of the device at these or any other conditions beyond those indicated in the operational sections of the specifications is not implied. Exposure to the absolute maximum rating conditions for extended periods may affect device reliability.

RECOMMENDED DC OPERATING CONDITIONS

(T_A = -40°C to +85°C)

PARAMETER	SYMBOL	CONDITIONS	MIN	TYP	MAX	UNITS
Power Supply Voltage (Note 2)	V_{CC}	5V (Y)	4.5	5.0	5.5	V
		3.3V (W)	3.0	3.3	3.6	
Logic 1 Voltage All Inputs (Note 2)	V_{IH}	Y	2.2		V_{CC} + 0.3	V
		W	2.0		V_{CC} + 0.3	
Pullup Voltage, $\overline{IRQ}$, $\overline{PWR}$, and $\overline{RST}$ Outputs	V_{PU}	(Note 2)			5.5	V
Logic 0 Voltage All Inputs (Note 2)	V_{IL}	Y	-0.3		+0.8	V
		W	-0.3		+0.6	
Battery Voltage (Note 2)	V_{BAT}		2.5	3.0	3.7	V
Auxiliary Battery Voltage (Note 2)	V_{BAUX}	Y	2.5	3.0	5.3	V
		W	2.5	3.0	3.7	

DC ELECTRICAL CHARACTERISTICS

($V_{CCMIN} < V_{CCI} < V_{CCMAX}$, T_A = -40°C to +85°C.)

PARAMETER	SYMBOL	CONDITIONS	MIN	TYP	MAX	UNITS
Active Supply Current (Note 3)	I_{CC}	Y			15	mA
		W			10	
TTL Standby Current (CS = V_{IH})	I_{CC1}	Y			5	mA
		W			4	
CMOS Standby Current (CS ≥ V_{CCI} - 0.2V)	I_{CC2}	Y			5	mA
		W			4	
Input Leakage Current (Any Input)	I_{IL}		-1		+1	µA
Output Leakage Current (Any Output)	I_{OL}		-1		+1	µA
Output Logic 1 Voltage (I_{OUT} = -1.0mA)	V_{OH}	(Note 2)	2.4			V
Output Logic 0 Voltage (I_{OUT} = 2.1mA, DQ0–7, $\overline{CEO}$ I_{OUT} = 5.0mA, $\overline{IRQ}$, I_{OUT} = 7.0mA $\overline{PWR}$, and $\overline{RST}$)	V_{OL1}	(Note 2)			0.4	V
	V_{OL2}	(Notes 2, 4)			0.4	V
Battery Low, Flag Trip Point (Note 2)	V_{BLF}	Y		2.0		V
		W		1.9		
Output Voltage (I_{CCO1} = 85mA) (Note 5)	V_{CCO1}	Y	V_{CCI} - 0.3			V
		W				
Power-Fail Voltage (Note 2)	V_{PF}	Y	4.20		4.50	V
		W	2.75		2.97	
Battery Switchover Voltage	V_{SO}	(Notes 2, 6)		V_{BAT}, V_{BAUX}, or V_{PF}		V
Output Voltage (I_{CCO2} = 50µA)	V_{CCO2}	(Note 7)	V_{BAT} - 0.3			V
Battery Leakage Current	I_{LKG}			10	100	nA

DC ELECTRICAL CHARACTERISTICS

(V_{CC} = 0V, T_A = -40°C to +85°C.)

PARAMETER	SYMBOL	CONDITIONS	MIN	TYP	MAX	UNITS
Battery Current, BB32 = 0, $\overline{EOSC}$ = 0	I_{BAT1}	(Notes 8, 9)		0.27	1.0	µA
Battery Current, BB32 = 0, $\overline{EOSC}$ = 1	I_{BAT2}	(Notes 8, 9)		0.01	0.1	µA
V_{BAUX} Current BB32 = 1, SQW Open	I_{BAUX}	(Notes 8, 9)		2		µA

CRYSTAL SPECIFICATIONS*

PARAMETER	SYMBOL	CONDITIONS	MIN	TYP	MAX	UNITS
Nominal Frequency	f_O			32.768		kHz
Series Resistance	ESR				45	kΩ
Load Capacitance	C_L			6		pF

**The crystal, traces, and crystal input pins should be isolated from RF generating signals. Refer to* Application Note 58: Crystal Considerations for Dallas Real-Time Clocks *for additional specifications.*

AC OPERATING CHARACTERISTICS

(**V_{CCI} = 5.0V ±10%**, T_A = -40°C to +85°C.)

PARAMETER	SYMBOL	CONDITIONS	MIN	TYP	MAX	UNITS
Read Cycle Time	t_{RC}		70			ns
Address Access Time	t_{AA}				70	ns
$\overline{CS}$ to DQ Low-Z	t_{CSL}	(Note 10)	5			ns
$\overline{CS}$ Access Time	t_{CSA}				70	ns
$\overline{CS}$ Data Off Time	t_{CSZ}	(Note 10)			25	ns
$\overline{OE}$ to DQ Low-Z (0°C to +85°C)	t_{OEL}	(Note 10)	5			ns
$\overline{OE}$ to DQ Low-Z (-40°C to 0°C)	t_{OEL}	(Note 10)	2			ns
$\overline{OE}$ Access Time	t_{OEA}				35	ns
$\overline{OE}$ Data Off Time	t_{OEZ}	(Note 10)			25	ns
Output Hold from Address	t_{OH}		5			ns
Write Cycle Time	t_{WC}		70			ns
Address Setup Time	t_{AS}		0			ns
$\overline{WE}$ Pulse Width	t_{WEW}		50			ns
$\overline{CS}$ Pulse Width	t_{CSW}		55			ns
Data Setup Time	t_{DS}		30			ns
Data Hold Time	t_{DH}		5			ns
Address Hold Time	t_{AH}		0			ns
$\overline{WE}$ Data Off Time	t_{WEZ}	(Note 10)			25	ns
Write Recovery Time	t_{WR}		15			ns
$\overline{CEI}$ to $\overline{CEO}$ Propagation Delay	t_{CEPD}		10			ns
Pulse Width, $\overline{OE}$, $\overline{WE}$, or $\overline{CS}$ High	PW_{HIGH}		20			ns
Pulse Width, $\overline{OE}$, $\overline{WE}$, or $\overline{CS}$ Low	PW_{LOW}		70			ns

AC OPERATING CHARACTERISTICS (continued)

(V_{CCI} **= 3.3V ±10%**, T_A = -40°C to +85°C.)

PARAMETER	SYMBOL	CONDITIONS	MIN	TYP	MAX	UNITS
Read Cycle Time	t_{RC}		120			ns
Address Access Time	t_{AA}				120	ns
$\overline{CS}$ to DQ Low-Z	t_{CSL}	(Note 10)	5			ns
$\overline{CS}$ Access Time	t_{CSA}				120	ns
$\overline{CS}$ Data Off Time	t_{CSZ}	(Note 10)			40	ns
$\overline{OE}$ to DQ Low-Z (0°C to +85°C)	t_{OEL}	(Note 10)	5			ns
$\overline{OE}$ to DQ Low-Z (-40°C to 0°C)	t_{OEL}	(Note 10)	2			ns
$\overline{OE}$ Access Time	t_{OEA}				100	ns
$\overline{OE}$ Data Off Time	t_{OEZ}	(Note 10)			35	ns
Output Hold from Address	t_{OH}		5			ns
Write Cycle Time	t_{WC}		120			ns
Address Setup Time	t_{AS}		0			ns
$\overline{WE}$ Pulse Width	t_{WEW}		100			ns
$\overline{CS}$ Pulse Width	t_{CSW}		110			ns
Data Setup Time	t_{DS}		80			ns
Data Hold Time	t_{DH}		5			ns
Address Hold Time	t_{AH}		0			ns
$\overline{WE}$ Data Off Time	t_{WEZ}	(Note 10)			40	ns
Write Recovery Time	t_{WR}		15			ns
$\overline{CEI}$ to $\overline{CEO}$ Propagation Delay	t_{CEPD}		10			ns
Pulse Width, $\overline{OE}$, $\overline{WE}$, or $\overline{CS}$ High	PW_{HIGH}		40			ns
Pulse Width, $\overline{OE}$, $\overline{WE}$, or $\overline{CS}$ Low	PW_{LOW}		100			ns

Figure 1. Read Cycle Timing

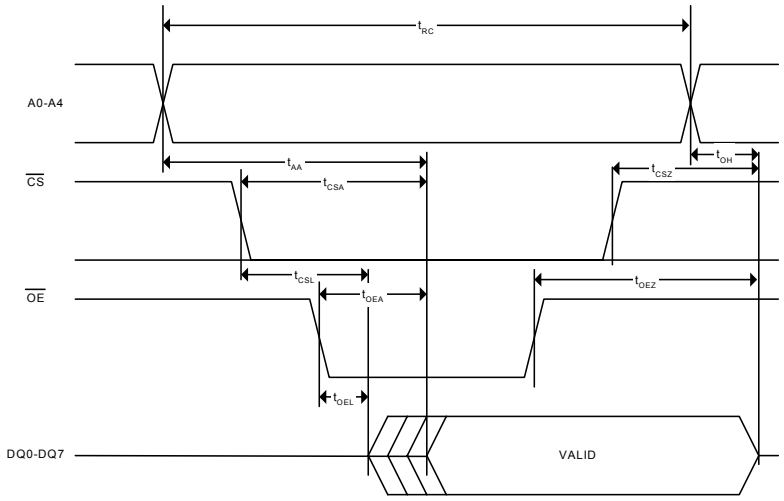

Figure 2. Write Cycle Timing, Write-Enable-Controlled

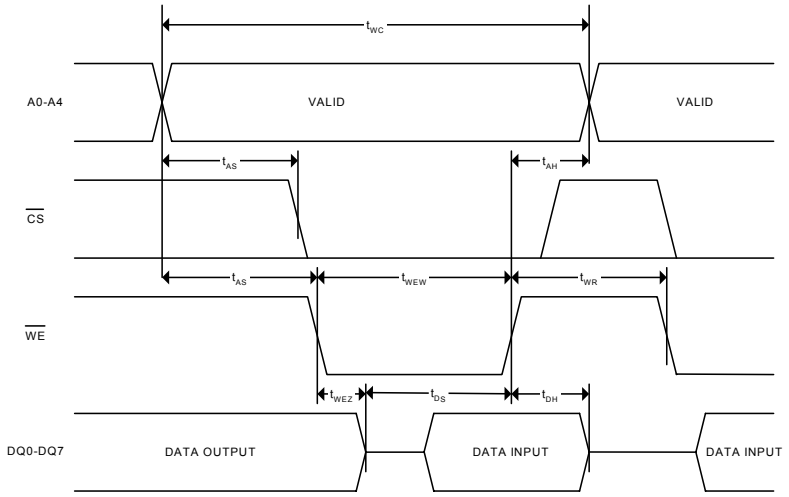

Figure 3. Write Cycle Timing, Chip-Select-Controlled

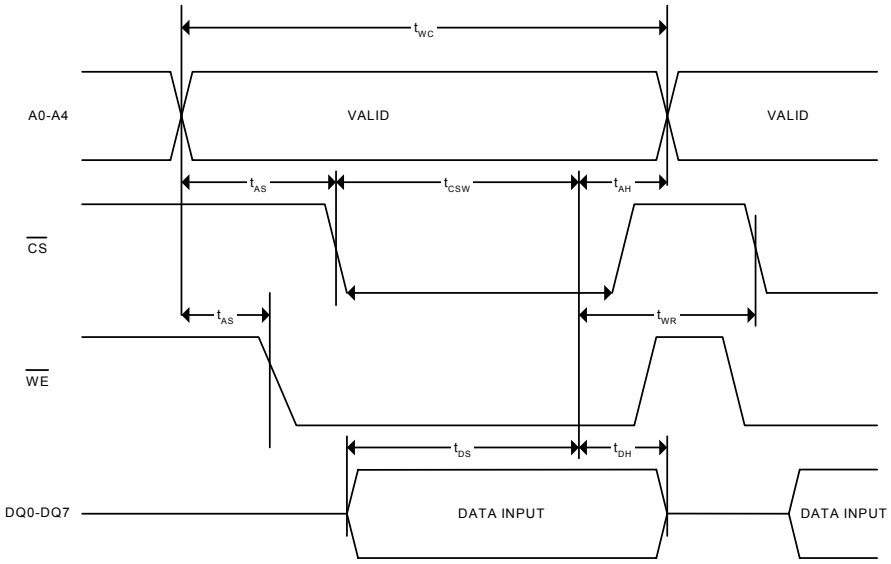

Figure 4. Burst Mode Timing Waveform

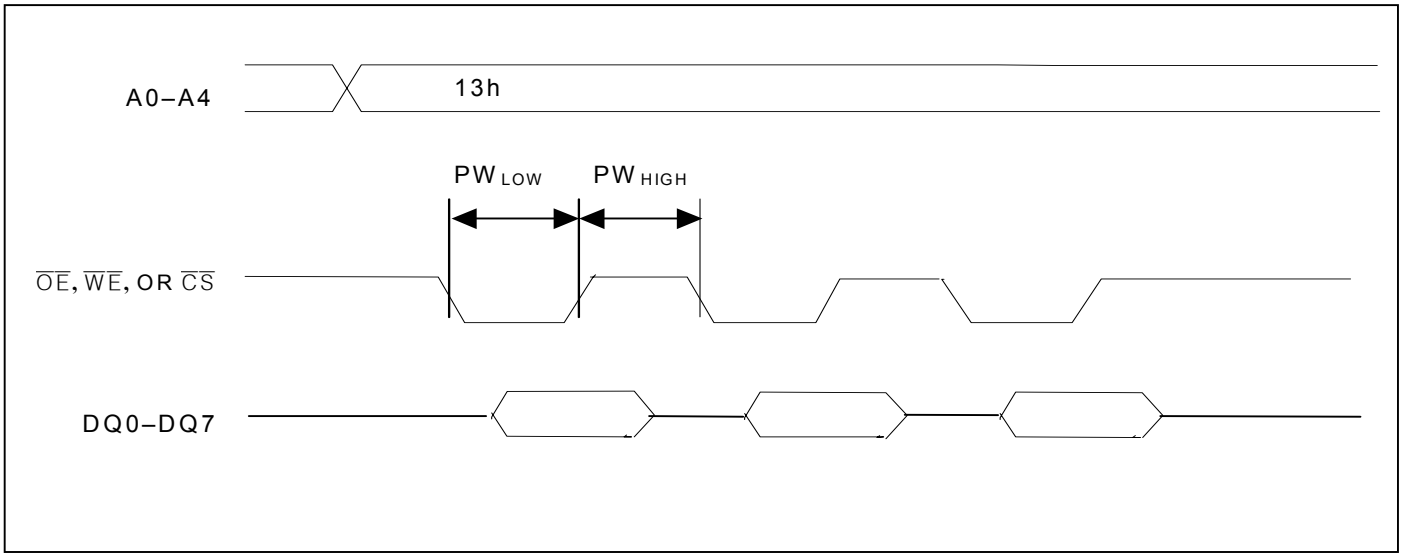

POWER-UP/DOWN CHARACTERISTICS (Figure 5)

PARAMETER	SYMBOL	CONDITIONS	MIN	TYP	MAX	UNITS
$\overline{CS}$, $\overline{CEI}$, or $\overline{WE}$ at V_{IH} Before Power-Fail	t_{PF}		0			µs
V_{CCI} Fall Time: $V_{PF(MAX)}$ to $V_{PF(MIN)}$	t_F		300			µs
V_{CCI} Fall Time: $V_{PF(MIN)}$ to V_{SO}	t_{FB}		10			µs
V_{CCI} Rise Time: $V_{PF(MIN)}$ to $V_{PF(MAX)}$	t_R		0			µs
V_{PF} to $\overline{RST}$ High	t_{REC}		35		200	ms

CAPACITANCE

(T_A = +25°C)

PARAMETER	SYMBOL	MIN	TYP	MAX	UNITS
Capacitance on All Input Pins	C_{IN}			10	pF
Capacitance on $\overline{IRQ}$, $\overline{PWR}$, $\overline{RST}$, and DQ Pins	C_{IO}			10	pF

AC TEST CONDITIONS

OUTPUT LOAD	INPUT PULSE LEVELS	TIMING MEASUREMENT REFERENCE LEVELS	INPUT PULSE RISE AND FALL TIMES
(Y) 50pF + 1TTL Gate (W) 25pF + 1 TTL Gate	0V to 3.0V for 5V operation	Input: 1.5V Output: 1.5V	5ns

Figure 5. 5V Power-Up/Down Waveform Timing

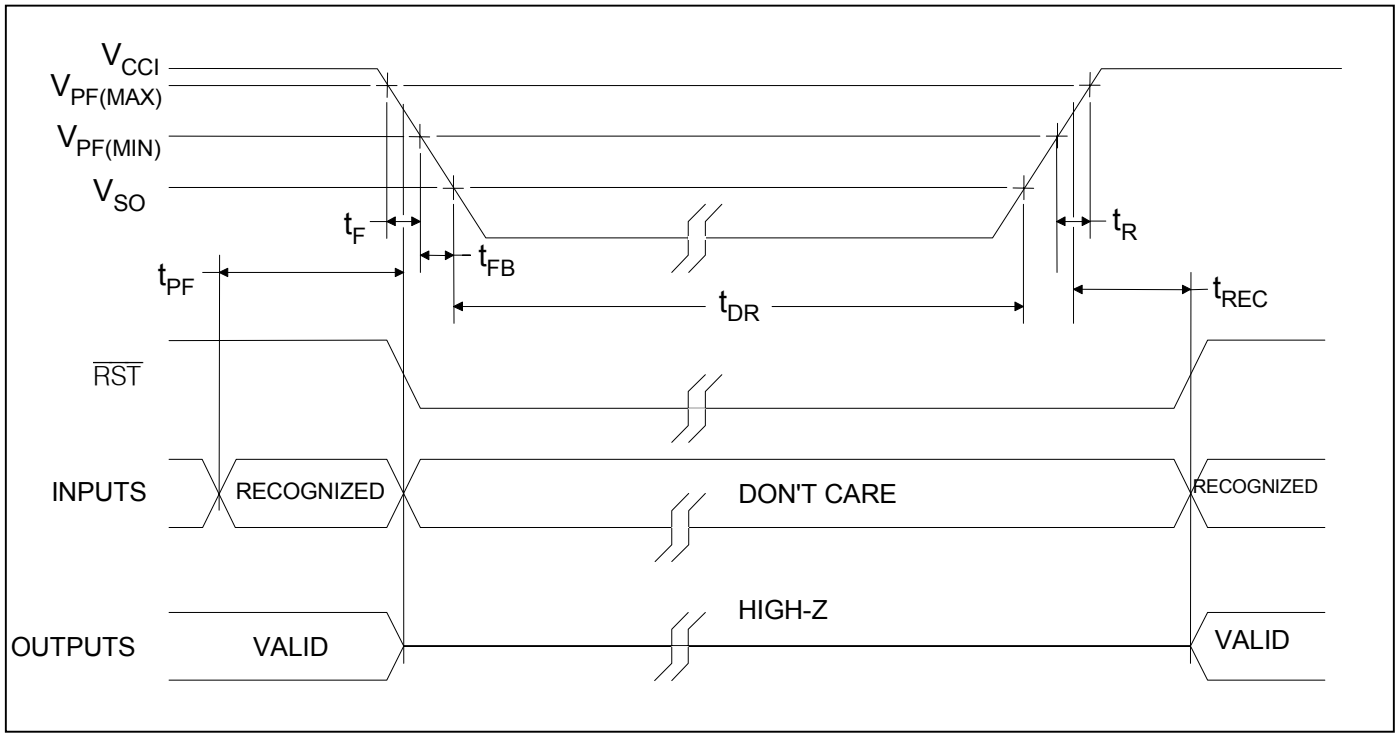

Warning: Under no circumstances are negative undershoots, of any amplitude, allowed when device is in battery-backup mode.

WAKEUP/KICKSTART TIMING

(T_A = +25°C) (Figure 6)

PARAMETER	SYMBOL	CONDITIONS	MIN	TYP	MAX	UNITS
Kickstart-Input Pulse Width	t_{KSPW}		2			µs
Wakeup/Kickstart Power-On Timeout	t_{POTO}	(Note 11)	2			s

Note: *Time intervals shown above are referenced in Wakeup/Kickstart.*

Figure 6. Wakeup/Kickstart Timing Diagram

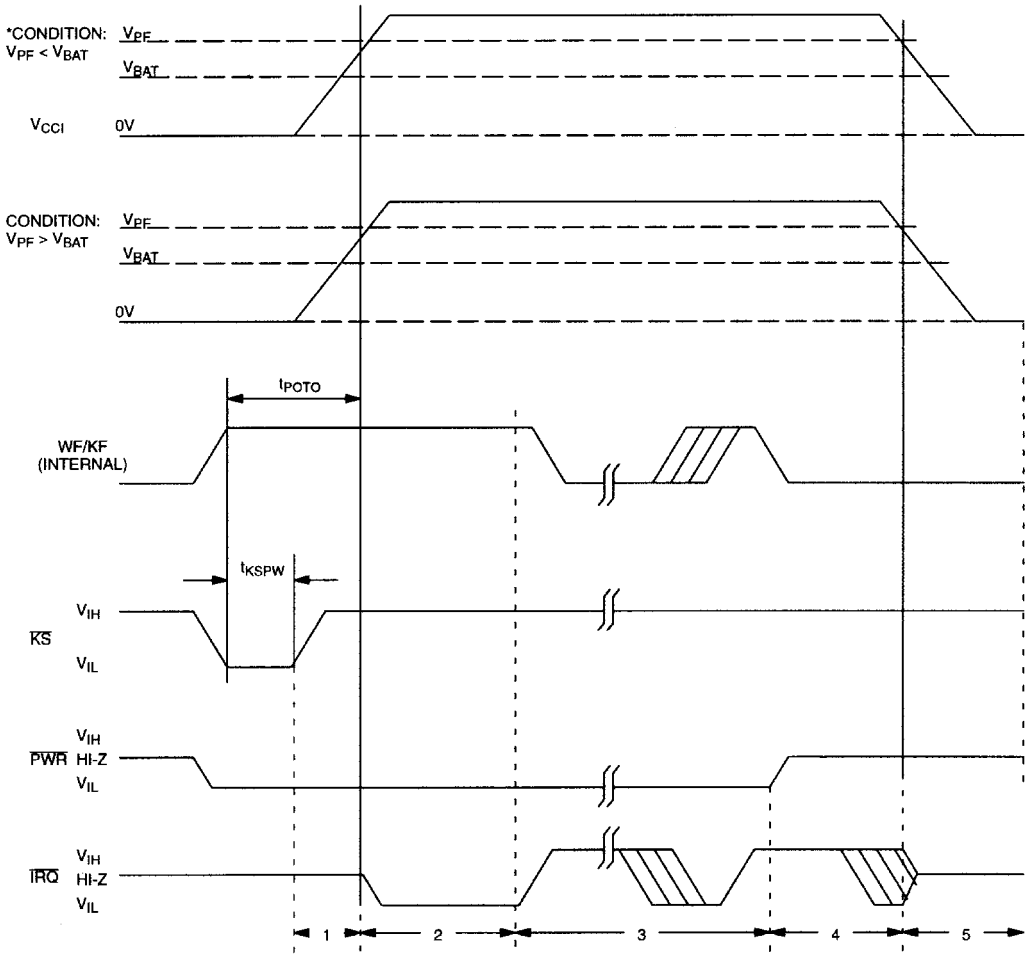

Note 1: Limits at -40°C are not production tested and are guaranteed by design.
Note 2: Voltage referenced to ground.
Note 3: Outputs are open.
Note 4: The $\overline{IRQ}$, $\overline{PWR}$, and $\overline{RST}$ outputs are open drain.
Note 5: Value for voltage and currents is from the V_{CCI} input pin to the V_{CCO} pin.
Note 6: If V_{PF} is less than V_{BAT} and V_{BAUX}, the device power is switched from V_{CC} to the greater of V_{BAT} or V_{BAUX} when V_{CC} drops below V_{PF}. If V_{PF} is greater than V_{BAT} and V_{BAUX}, the device power is switched from V_{CC} to the greater of V_{BAT} or V_{BAUX} when V_{CC} drops below the greater of V_{BAT} or V_{BAUX}.
Note 7: Value for voltage and currents is from the V_{BAT} or V_{BAUX} input pin to the V_{CCO} pin.
Note 8: I_{BAT1} and I_{BAT2} are specified with V_{CCO} floating and do not include any RAM current.
Note 9: V_{BAT} or V_{BAUX} current. Using a 32,768Hz crystal connected to X1 and X2.
Note 10: These parameters are sampled with a 5pF load and are not 100% tested.
Note 11: Typical values are at +25°C, nominal (active) supply, unless otherwise noted.
Note 12: If the oscillator is not enabled, the startup time of the oscillator after V_{CCI} is applied is added to the wakeup/kickstart timeout.

PIN DESCRIPTION

PIN	NAME	FUNCTION
1	SQW	Square-Wave Output. When enabled, the SQW pin outputs a 32.768kHz square wave. If the square wave ($\overline{E32K}$) and battery-backup 32kHz (BB32) bits are enabled, power is provided by V_{BAUX} when V_{CC} is absent.
2	$\overline{KS}$	Kickstart Input. This pin is used to wake up a system from an external event, such as a key closure. The $\overline{KS}$ pin is normally connected using a pullup resistor to V_{BAUX}. If the $\overline{KS}$ function is not used, connect to ground.
3	V_{BAT}	Battery input for any standard 3V lithium cell or other energy source. Battery voltage must be held between 2.5V and 3.7V for proper operation. UL recognized to ensure against reverse charging current when used with a lithium battery. If not used, connect to ground.*
4	V_{BAUX}	Auxiliary battery input for any standard 3V lithium cell or other energy source. Battery voltage must be held between 2.5V and 3.7V for proper operation. Provides backup power to the device, and provides power for auxiliary functions. UL recognized to ensure against reverse charging current when used with a lithium battery. If not used, connect to ground.*
5	$\overline{CEO}$	Chip-Enable Output. Buffered chip-enable output signal for external SRAM switches high when V_{CCI} falls below the power-fail point V_{PF}.
6	$\overline{CEI}$	Chip-Enable Input. Input for chip-enable signal for external SRAM.
7	$\overline{WE}$	Write-Enable Input. Active-low input that enables DQ0–DQ7 for data input to the device.
8	V_{CC1}	DC power is applied to the device on these pins. V_{CC} is the positive terminal. When power is applied within the normal limits, the device is fully accessible and data can be written and read. When V_{CC} drops below the normal limits, reads and writes are inhibited. As V_{CC} drops below the battery voltage, the RAM and timekeeping circuits are switched over to the battery.
9	V_{CC0}	Buffered V_{CC} output to external SRAM. Switches to either V_{BAT} or V_{BAUX} when in data retention mode.
10	N.C.	No Connect
11	$\overline{PWR}$	Power-On Output (Open Drain). This output, if used, is normally connected to power-supply control circuitry. This pin requires a pullup resistor connected to a positive supply to operate correctly.
12, 13	X1, X2	Connections for a standard 32.768kHz quartz crystal. For greatest accuracy, the DS1500 must be used with a crystal that has a specified load capacitance of either 6pF or 12.5pF. The crystal select (CS) bit in control register B is used to select operation with a 6pF or 12.5pF crystal. The crystal is attached directly to the X1 and X2 pins. There is no need for external capacitors or resistors. An external 32.768kHz oscillator can also drive the DS1500. In this configuration, the X1 pin is connected to the external oscillator signal and the X2 pin is floated. For more information about crystal selection and crystal layout considerations, refer to *Application Note 5*8: *Crystal Considerations with Dallas Real-Time Clocks*. See Figure 8.
14	$\overline{RST}$	Reset Output (Open Drain). This output, if used, is normally connected to a microprocessor-reset input. This pin requires a pullup resistor connected to a positive supply to operate correctly. When RST is active, the device is not accessible.
15	$\overline{IRQ}$	Interrupt Output (Open Drain). This output, if used, is normally connected to a microprocessor interrupt input. This pin requires a pullup resistor connected to a positive supply to operate correctly.
16–20	A4–A0	Address Inputs. Selects one of 17 register locations.
21–23, 25–29	DQ0–DQ7	Data I/O pins for 8-bit parallel data transfer.
24, 31	GND	DC power is applied to the device on these pins. V_{CC} is the positive terminal. When power is applied within the normal limits, the device is fully accessible and data can be written and read. When V_{CC} drops below the normal limits, reads and writes are inhibited. As V_{CC} drops below the battery voltage, the RAM and timekeeping circuits are switched over to the battery.
30	$\overline{CS}$	Chip-Select Input. Active-low input to enable the device.
32	$\overline{OE}$	Output-Enable Input. Active-low input that enables DQ0–DQ7 for data output from the device

**See "Conditions of Acceptability" at www.maxim-ic.com/TechSupport/QA/ntrl.htm.*

Figure 7. Block Diagram

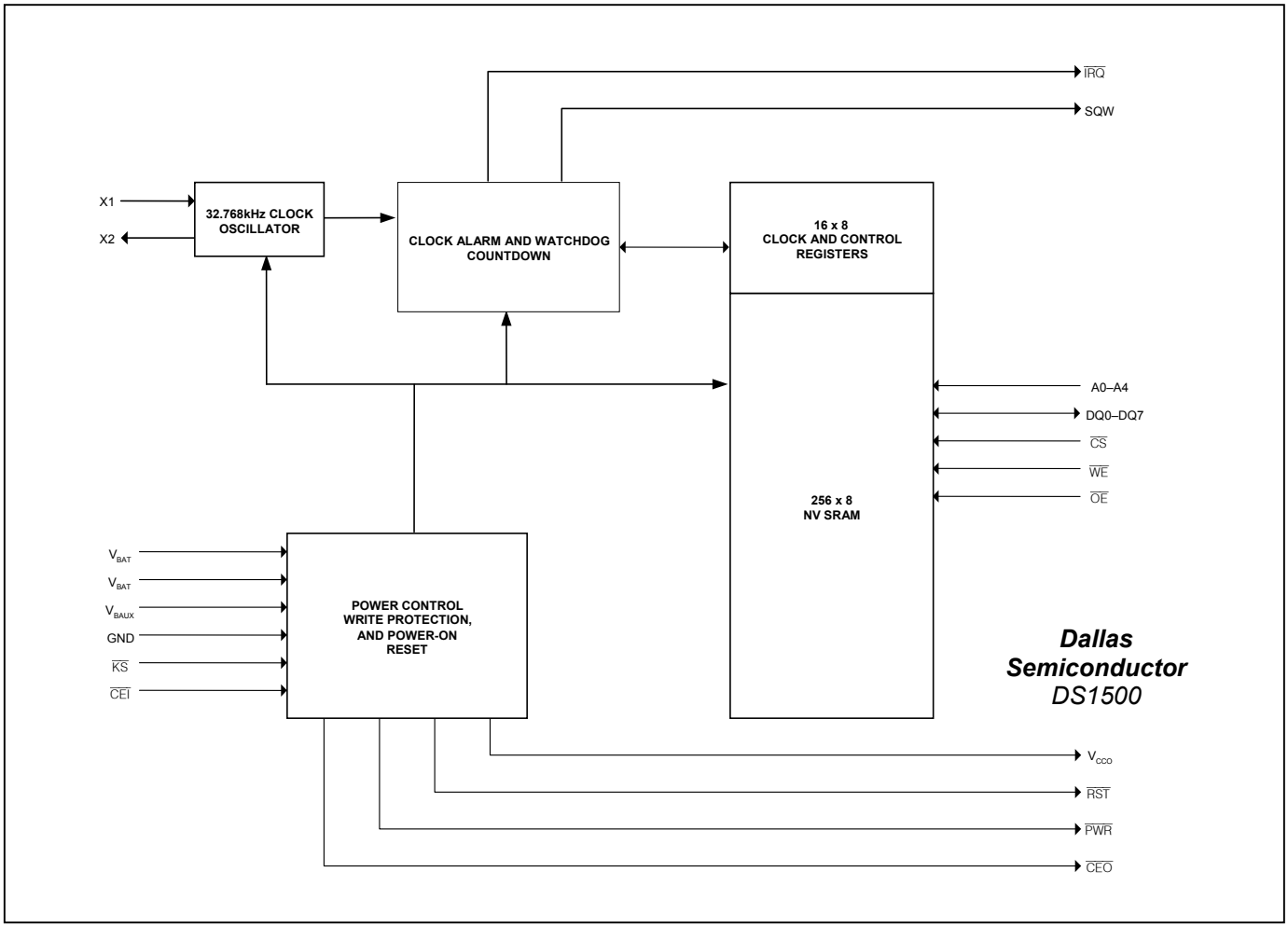

Figure 8. Typical Crystal Layout

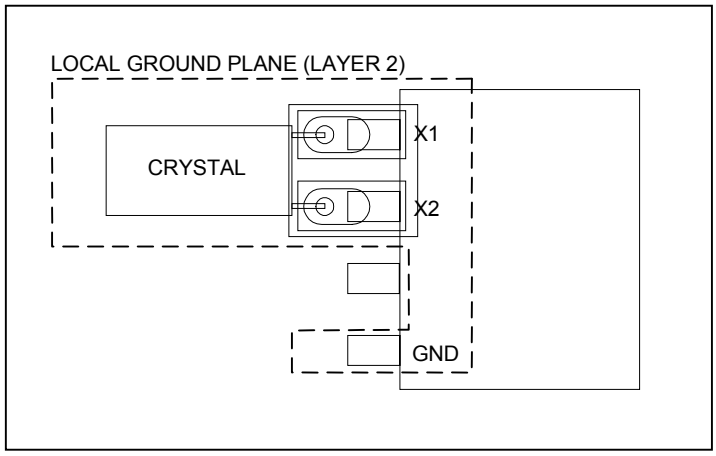

DETAILED DESCRIPTION

The RTC registers are double buffered into an internal and external set. The user has direct access to the external set. Clock/calendar updates to the external set of registers can be disabled and enabled to allow the user to access static data. When the crystal oscillator is turned on, the internal set of registers are continuously updated; this occurs regardless of external register settings to guarantee that accurate RTC information is always maintained.

The DS1500 contains its own power-fail circuitry that automatically deselects the device when the V_{CCI} supply falls below a power-fail trip point. This feature provides a high degree of data security during unpredictable system operation caused by low V_{CCI} levels. An external SRAM can be made nonvolatile by using the V_{CCO} and $\overline{CEO}$ pins. Nonvolatile control of the external SRAM is analogous to that of the RTC registers. When V_{CCI} slews down during a power fail, $\overline{CEO}$ is driven to an inactive level regardless of $\overline{CEI}$. This write protection occurs when V_{CCI} is less than the power-fail trip point.

The DS1500 has interrupt ($\overline{IRQ}$), power control ($\overline{PWR}$), and reset ($\overline{RST}$) outputs that can be used to control CPU activity. The $\overline{IRQ}$ interrupt or $\overline{RST}$ outputs can be invoked as the result of a time-of-day alarm, CPU watchdog alarm, or a kickstart signal. The DS1500 power-control circuitry allows the system to be powered on by an external stimulus, such as a keyboard or by a time and date (wakeup) alarm. The $\overline{PWR}$ output pin can be triggered by one or either of these events, and can be used to turn on an external power supply. The $\overline{PWR}$ pin is under software control, so that when a task is complete, the system power can then be shut down. The DS1500 power-on reset can be used to detect a system power-down or failure and hold the CPU in a safe reset state until normal power returns and stabilizes; the $\overline{RST}$ output is used for this function.

The DS1500 is a clock/calendar chip with the features described above. An external crystal and battery are the only components required to maintain time-of-day and memory status in the absence of power..

Table 1. RTC Operating Modes

V_{CCI}	$\overline{CS}$	$\overline{OE}$	$\overline{WE}$	DQ0–DQ7	A0–A4	MODE	POWER
$V_{CCI} > V_{PF}$	V_{IH}	X	X	High-Z	X	Deselect	Standby
	V_{IL}	X	V_{IL}	D_{IN}	A_{IN}	Write	Active
	V_{IL}	V_{IL}	V_{IH}	D_{OUT}	A_{IN}	Read	Active
	V_{IL}	V_{IH}	V_{IH}	High-Z	A_{IN}	Read	Active
$V_{SO} < V_{CCI} < V_{PF}$	X	X	X	High-Z	X	Deselect	CMOS Standby
$V_{CCI} < V_{SO} < V_{PF}$	X	X	X	High-Z	X	Data Retention	Battery Current

DATA READ MODE

The DS1500 is in read mode whenever $\overline{CS}$ (chip select) and $\overline{OE}$ (output enable) are low and $\overline{WE}$ (write enable) is high. The device architecture allows ripple-through access to any valid address location. Valid data is available at the DQ pins within t_{AA} (address access) after the last address input is stable, provided that $\overline{CS}$ and $\overline{OE}$ access times are satisfied. If $\overline{CS}$ or $\overline{OE}$ access times are not met, valid data is available at the latter of chip-enable access (t_{CSA}) or at output-enable access time (t_{OEA}). The state of the data input/output pins (DQ) is controlled by $\overline{CS}$ and $\overline{OE}$. If the outputs are activated before t_{AA}, the data lines are driven to an intermediate state until t_{AA}. If the address inputs are changed while $\overline{CS}$ and $\overline{OE}$ remain valid, output data remains valid for output-data hold time (t_{OH}) but then goes indeterminate until the next address access (Table 1).

DATA WRITE MODE

The DS1500 is in write mode whenever $\overline{CS}$ and $\overline{WE}$ are in their active state. The start of a write is referenced to the latter occurring transition of $\overline{CS}$ or $\overline{WE}$. The addresses must be held valid throughout the cycle. $\overline{CS}$ or $\overline{WE}$ must return inactive for a minimum of t_{WR} prior to the initiation of a subsequent read or write cycle. Data in must be valid t_{DS} prior to the end of the write and remain valid for t_{DH} afterward. In a typical application, the $\overline{OE}$ signal is high during a write cycle. However, $\overline{OE}$ can be active provided that care is taken with the data bus to avoid bus contention. If $\overline{OE}$ is low prior to a high-to-low transition on $\overline{WE}$, the data bus can become active with read data defined by the address inputs. A low transition on $\overline{WE}$ then disables the outputs t_{WEZ} after $\overline{WE}$ goes active (Table 1).

DATA RETENTION MODE

The DS1500 is fully accessible and data can be written and read only when V_{CCI} is greater than V_{PF}. However, when V_{CCI} falls below the power-fail point V_{PF} (point at which write protection occurs) the internal clock registers and SRAM are blocked from any access. While in the data retention mode, all inputs are don't cares and outputs go to a high-Z state, with the exception of V_{CCO}, $\overline{CEO}$, and with the possible exception of $\overline{KS}$, $\overline{PWR}$, SQW, and $\overline{RST}$. $\overline{CEO}$ is forced high. If V_{PF} is less than V_{BAT} and V_{BAUX}, the device power is switched from V_{CCI} to the greater of V_{BAT} and V_{BAUX} when V_{CCI} drops below V_{PF}. If V_{PF} is greater than V_{BAT} and V_{BAUX}, the device power and V_{CCO} are switched from V_{CCI} to the larger of V_{BAT} and V_{BAUX} when V_{CCI} drops below the larger of V_{BAT} and V_{BAUX}. RTC operation and SRAM data are maintained from the battery until V_{CC} is returned to nominal levels (Table 1). If the square-wave and battery-backup 32kHz functions are enabled, V_{BAUX} always provides power for the square-wave output, when the device is in battery-backup mode. All control, data, and address signals must be no more than 0.3V above V_{CCI}.

AUXILIARY BATTERY

The V_{BAUX} input is provided to supply power from an auxiliary battery for the DS1500 kickstart and square-wave output features in the absence of V_{CCI}. This power source must be available to use these auxiliary features when no V_{CCI} is applied to the device.

This auxiliary battery can be used as the primary backup power source for maintaining the clock/calendar and external SRAM. This occurs if the V_{BAT} pin is at a lower voltage than V_{BAUX}. If the DS1500 is to be backed-up using a single battery with the auxiliary features enabled, then V_{BAUX} should be used and connected to V_{BAT}. If V_{BAUX} is not to be used, it should be grounded.

POWER-ON RESET

A temperature-compensated comparator circuit monitors the level of V_{CCI}. When V_{CCI} falls to the power-fail trip point, the $\overline{RST}$ signal (open drain) is pulled low. When V_{CCI} returns to nominal levels, the $\overline{RST}$ signal continues to be pulled low for a period of t_{REC}. The power-on reset function is independent of the RTC oscillator and therefore operational whether or not the oscillator is enabled.

TIME AND DATE OPERATION

The time and date information is obtained by reading the appropriate register bytes. Table 2 shows the RTC registers. The time and date are set or initialized by writing the appropriate register bytes. The contents of the time and date registers are in the binary-coded decimal (BCD) format. Hours are in 24-hour mode. The day-of-week register increments at midnight. Values that correspond to the day of week are user-defined, but must be sequential (i.e., if 1 equals Sunday, then 2 equals Monday, and so on). Illogical time and date entries result in undefined operation.

READING THE CLOCK

When reading the clock and calendar data, it is possible to access the registers while an update (once per second) occurs. There are three ways to avoid using invalid time and date data.

The first method uses the transfer enable (TE) bit in the control B register. Transfers are halted when a 0 is written to the TE bit. Setting TE to 0 halts updates to the user-accessible registers, while allowing the internal registers to advance. After the registers are read, the TE bit should be written to 1. TE must be kept at 1 for at least 366µs to ensure a user register update.

The time and date registers can be read and stored in temporary variables. The time and date registers are then read again, and compared to the first values. If the values do not match, the time and date registers should be read a third time and compared to the previous values. This should be done until two consecutive reads of the time and date registers match. The TE bit should always be enabled when using this method for reading the time and date,.

The third method of reading the time and date uses the alarm function. The alarm can be configured to activate once per second, and the time-of-day alarm-interrupt enable bit (TIE) is enabled. The TE bit should always be enabled. When the $\overline{IRQ}$ pin goes active, the time and date information does not change until the next update.

SETTING THE CLOCK

It is recommended to halt updates to the external set of double buffered RTC registers when writing to the clock. The (TE) bit should be used as described above before loading the RTC registers with the desired RTC count (day, date, and time) in 24-hour BCD format. Setting the (TE) bit to 1 transfers the new values written to the internal RTC registers and allows normal operation to resume.

CLOCK ACCURACY

A standard 32.768kHz quartz crystal should be directly connected to the DS1500 X1 and X2 oscillator pins. The crystal selected for use should have a specified load capacitance (C_L) of either 6pF or 12.5pF, and the crystal select (CS) bit set accordingly. For more information about crystal selection and crystal layout considerations, refer to *Application Note 58: Crystal Considerations with Dallas Real-Time Clocks*. An external 32.768kHz oscillator can also drive the DS1500. To achieve low-power operation when using an external oscillator, it may be necessary to connect the X1 pin to the external oscillator signal through a series connection consisting of a resistor and a capacitor. A typical configuration consists of a 1.0M resistor in series with a 100pF ceramic capacitor. When using an external oscillator the X2 pin must be left open. Accuracy of DS1510 is better than ±1min/month at +25°C.

Table 2. Register Map

ADDRESS	DATA								FUNCTION	BCD RANGE
	B7	B6	B5	B4	B3	B2	B1	B0		
00H	0	10 Seconds			Seconds				Seconds	00–59
01H	0	10 Minutes			Minutes				Minutes	00–59
02H	0	0	10 Hours		Hour				Hours	00–23
03H	0	0	0	0	0	Day			Day	1–7
04H	0	0	10 Date		Date				Date	01–31
05H	$\overline{EOSC}$	$\overline{E32K}$	BB32	10 MO	Month				Month	01–12
06H	10 YEAR				Year				Year	00–99
07H	10 CENTURY				Century				Century	00–39
08H	AM1	10 Seconds			Seconds				Alarm Seconds	00–59
09H	AM2	10 Minutes			Minutes				Alarm Minutes	00–59
0AH	AM3	0	10 Hours		Hour				Alarm Hours	00–23
0BH	AM4	Dy/Dt	10 Date		Day/Date				Alarm Day/Date	1–7/1–31
0CH	0.1 Second				0.01 Second				Watchdog	00–99
0DH	10 Second				Second				Watchdog	00–99
0EH	BLF1	BLF2	PRS	PAB	TDF	KSF	WDF	IRQF	Control A	
0FH	TE	CS	BME	TPE	TIE	KIE	WDE	WDS	Control B	
10H	Extended RAM Address								RAM Address LSB	00–FF
11H	Reserved									
12H	Reserved									
13H	Extended RAM Data								RAM Data	00–FF
14H-1FH	Reserved									

0 = “0” and are read only.

POWER-UP DEFAULT STATES

These bits are set upon power-up: $\overline{EOSC}$ = 0, $\overline{E32K}$ = 0, TIE = 0, KIE = 0, WDE = 0, and WDS = 0.

Note: Unless otherwise specified, the state of the control/RTC/SRAM bits in the DS1500 is not defined upon initial power application; the DS1500 should be properly configured/defined during initial configuration.

USING THE CLOCK ALARM

The alarm settings and control reside within registers 08h to 0Bh (Table 2). The TIE bit and alarm mask bits AM1 to AM4 must be set as described below for the $\overline{IRQ}$ or $\overline{PWR}$ outputs to be activated for a matched alarm condition. The alarm functions as long as at least one supply is at a valid level. Note that activating the $\overline{PWR}$ pin requires the use of V_{BAUX}.

The alarm can be programmed to activate on a specific day of the month, day of the week, or repeat every day, hour, minute, or second. It can also be programmed to go off while the DS1500 is in the battery-backed state of operation to serve as a system wakeup. Alarm mask bits AM1 to AM4 control the alarm mode. Table 3 shows the possible settings. Configurations not listed in the table default to the once-per-second mode to notify the user of an incorrect alarm setting. When the RTC register values match alarm register settings, the time-of-day/date alarm flag TDF bit is set to 1. Once the TDF flag is set, the TIE bit enables the alarm to activate the $\overline{IRQ}$ pin. The TPE bit enables the alarm flag to activate the $\overline{PWR}$ pin. The alarm functions on V_{CC}, V_{BAT}, and V_{BAUX}.

Table 3. Alarm Mask Bits

DY/DT	AM4	AM3	AM2	AM1	ALARM RATE
X	1	1	1	1	Once per second
X	1	1	1	0	When seconds match
X	1	1	0	0	When minutes and seconds match
X	1	0	0	0	When hours, minutes, and seconds match
0	0	0	0	0	When date, hours, minutes, and seconds match
1	0	0	0	0	When day, hours, minutes, and seconds match

CONTROL REGISTERS

The controls and status information for the DS1500 features are maintained in the following register bits.

Month Register (05h)

Bit 7	Bit 6	Bit 5	Bit 4	Bit 3	Bit 2	Bit 1	Bit 0
$\overline{EOSC}$	$\overline{E32K}$	BB32	10 Month	Month			

$\overline{EOSC}$, Oscillator Start/Stop Bit (05h Bit 7)
This bit when set to logic 0 starts the oscillator. When this bit is set to logic 1, the oscillator is stopped. This bit is automatically set to logic 0 by the internal power-on reset when power is applied and V_{CC} rises above the power-fail voltage.

$\overline{E32K}$, Enable 32.768kHz Output (05h Bit 6)
This bit, when written to 0, enables the 32.768 kHz oscillator frequency to be output on the SQW pin if the oscillator is running. This bit is automatically set to logic 0 by the internal power-on reset when power is applied and V_{CC} rises above the power-fail voltage.

BB32, Battery Backup 32kHz Enable Bit (05h Bit 5)
When the BB32 bit is written to 1, it enables a 32kHz signal to be output on the SQW pin while the part is in battery-backup mode, if voltage is applied to $V_{BAUX.}$

AM1 to AM4, Alarm Mask Bits (08H Bit 7; 09H Bit 7; 0AH Bit 7; 0BH Bit 7)
Bit 7 of registers 08h to 0Bh contains an alarm mask bit, AM1 to AM4. These bits, in conjunction with the TIE described later, allow the $\overline{IRQ}$ output to be activated for a matched-alarm condition. The alarm can be programmed to activate on a specific day of the month, day of the week, or repeat every day, hour, minute, or second. Table 3 shows the possible settings for AM1 to AM4 and the resulting alarm rates. Configurations not listed in the table default to the once-per-second mode to notify the user of an incorrect alarm setting.

DY/DT, Day/Date Bit (0BH Bit 6)
The DY/DT bit controls whether the alarm value stored in bits 0 to 5 of 0BH reflects the day of the week or the date of the month. If DY/DT is written to a 0, the alarm is the result of a match with the date of the month. If DY/DT is written to a 1, the alarm is the result of a match with the day of the week.

Control A Register (0Eh)

Bit 7	Bit 6	Bit 5	Bit 4	Bit 3	Bit 2	Bit 1	Bit 0
BLF1	BLF2	PRS	PAB	TDF	KSF	WDF	IRQF

BLF1, Valid RAM and Time Bit 1 (0Eh Bit 7); BLF2, Valid RAM and Time Bit 2 (0Eh Bit 6)
These status bits give the condition of any batteries attached to the V_{BAT} or V_{BAUX} pins. The DS1500 constantly monitors the battery voltage of the backup-battery sources (V_{BAT} and V_{BAUX}). The BLF1 and BLF2 bits are set to 1 if the battery voltage on V_{BAT} and V_{BAUX} is less than V_{BLF}, otherwise BLF1 and BLF2 bits are 0. BLF1 reflects the condition of V_{BAT} with BLF2 reflecting V_{BAUX}. If either bit is read as 1, the voltage on the respective pin is inadequate to maintain the RAM memory or clock functions. These bits are read only.

PRS, Reset Select Bit (0Eh Bit 5)
When set to 0, the $\overline{PWR}$ pin is set high-Z when the DS1500 goes into power-fail. When set to 1, the $\overline{PWR}$ pin remains active upon entering power-fail.

PAB, Power Active-Bar Control Bit (0Eh Bit 4)
When this bit is 0, the $\overline{PWR}$ pin is in the active-low state. When this bit is 1, the $\overline{PWR}$ pin is in the high-impedance state. The user can write this bit to 1 or 0. If either TDF AND TPE = 1 or KSF = 1, the PAB bit is cleared to 0. This bit can be read or written.

TDF, Time-of-Day/Date Alarm Flag (0Eh Bit 3)
A 1 in the TDF bit indicates that the current time has matched the alarm time. If the TIE bit is also 1, the $\overline{IRQ}$ pin goes low and a 1 appears in the IRQF bit. This bit is cleared by reading the register or writing it to 0.

KSF, Kickstart Flag (0Eh Bit 2)
This bit is set to 1 when a kickstart condition occurs or when the user writes it to 1. If the KIE bit is also 1, the $\overline{IRQ}$ pin goes low and a 1 appears in the IRQF bit. This bit is cleared by reading the register or writing it to 0.

WDF, Watchdog Flag (0Eh Bit 1)
If the processor does not access the DS1500 with a write within the period specified in addresses 0CH and 0DH, the WDF bit is set to 1. WDF is cleared by writing it to 0.

IRQF, Interrupt Request Flag (0Eh Bit 0)
The interrupt request flag (IRQF) bit is set to 1 when one or more of the following are true:
TDF = TIE = 1
KSF = KIE = 1
WDF = WDE = 1

i.e., IRQF = (TDF x TIE) + (KSF x KIE) + (WDF x WDE)

Any time the IRQF bit is 1, the $\overline{IRQ}$ pin is driven low.

Clearing $\overline{IRQ}$ and Flags

The time-of-day/date alarm flag (TDF), watchdog flag (WDF), kickstart flag (KSF) and interrupt request flag (IRQF) are cleared by reading the flag register (0EH). The address must be stable for a minimum of 15ns while $\overline{CS}$ and $\overline{OE}$ are active. After the address stable requirement has been met, either a change in address, a rising edge of $\overline{OE}$, or a rising edge of $\overline{CS}$ causes the flags to be cleared. The $\overline{IRQ}$ pin goes inactive after the IRQF flag is cleared. TDF and WDF can also be cleared by writing to 0.

Control B Register (0Fh)

Bit 7	Bit 6	Bit 5	Bit 4	Bit 3	Bit 2	Bit 1	Bit 0
TE	CS	BME	TPE	TIE	KIE	WDE	WDS

TE, Transfer Enable Bit (0Fh Bit 7)
When the TE bit is 1, the update transfer functions normally by advancing the counts once per second. When the TE bit is written to 0, any update transfer is inhibited and the program can initialize the time and calendar bytes without an update occurring in the midst of initializing. Read cycles can be executed in a similar manner. TE is a read/write bit that is not modified by internal functions of the DS1500.

CS, Crystal Select Bit (0Fh Bit 6)
When CS is set to 0, the oscillator is configured for operation with a crystal that has a 6pF specified load capacitance. When CS = 1, the oscillator is configured for a 12.5pF crystal. CS is disabled in the DS1510 module and should be set to CS = 0.

BME, Burst-Mode Enable Bit (0Fh Bit 5)
The burst-mode enable bit allows the extended user RAM address registers to automatically increment for consecutive reads and writes. When BME is set to 1, the automatic incrementing is enabled; when BME is set to 0, the automatic incrementing is disabled.

TPE, Time-of-Day/Date Alarm Power-Enable Bit (0Fh Bit 4)
The wakeup feature is controlled through the TPE bit. When the TDF flag bit is set to 1, if TPE is 1, the $\overline{PWR}$ pin is driven active. Therefore, setting TPE to 1 enables the wakeup feature. Writing a 0 to TPE disables the wakeup feature.

TIE, Time-of-Day/Date Alarm Interrupt-Enable Bit (0Fh Bit 3)
The TIE bit allows the TDF flag to assert an interrupt. When the TDF flag bit is set to 1, if TIE is 1, the IRQF flag bit is set to 1. Writing a 0 to the TIE bit prevents the TDF flag from setting the IRQF flag.

KIE, Kickstart Enable-Interrupt Bit (0Fh Bit 2)
When V_{CCI} voltage is absent and KIE is set to 1, the $\overline{PWR}$ pin is driven active low when a kickstart condition occurs ($\overline{KS}$ pulsed low), causing the KSF bit to be set to 1. When V_{CCI} is then applied, the $\overline{IRQ}$ pin is also driven low. If KIE is set to 1 while system power is applied, both $\overline{IRQ}$ and $\overline{PWR}$ are driven low in response to KSF being set to 1. When KIE is cleared to a 0, the KSF bit has no effect on the $\overline{PWR}$ or $\overline{IRQ}$ pins.

WDE, Watchdog Enable Bit (0Fh Bit 1)
When WDE is set to 1, the watchdog function is enabled, and either the $\overline{IRQ}$ or $\overline{RST}$ pin is pulled active based on the state of the WDS and WDF bits. This bit is automatically cleared to logic 0 to by the internal power-on reset when power is applied and V_{CC} rises above the power-fail voltage.

WDS, Watchdog Steering Bit (0Fh Bit 0)
If WDS is 0 when the watchdog flag bit WDF is set to 1, the $\overline{IRQ}$ pin is pulled low. If WDS is 1 when WDF is set to 1, the watchdog outputs a negative pulse on the $\overline{RST}$ output. The WDE bit resets to 0 immediately after $\overline{RST}$ goes active. This bit is automatically cleared to logic 0 to by the internal power-on reset when power is applied and V_{CC} rises above the power-fail voltage.

CLOCK OSCILLATOR CONTROL

The clock oscillator can be stopped at any time. To increase the shelf life of a backup lithium-battery source, the oscillator can be turned off to minimize current drain from the battery. The $\overline{EOSC}$ bit is used to control the state of the oscillator, and must be set to 0 for the oscillator to function.

USING THE WATCHDOG TIMER

The watchdog timer can be used to restart an out-of-control processor. The watchdog timer is user programmable in 10ms intervals ranging from 0.01 seconds to 99.99 seconds. The user programs the watchdog timer by writing the timeout value into the two BCD watchdog registers (address 0Ch and 0Dh). The watchdog reloads and restarts whenever the watchdog times out. If either watchdog register is nonzero, a timeout sets the WDF bit to 1,

regardless of the state of the watchdog enable (WDE) bit, to serve as an indication to the processor that a watchdog timeout has occurred. The watchdog timer operates in two modes, repetitive and single-shot.

If WDE is 1 and the watchdog steering bit (WDS) is 0, the watchdog is in repetitive mode. When the watchdog times out, both WDF and IRQF are set. $\overline{IRQ}$ goes active and IRQF goes to 1. The watchdog timer is reloaded when the processor performs a write of the watchdog registers and the timeout period restarts. Reading the control A register clears the $\overline{IRQ}$ flag.

If WDE and WDS are 1, the watchdog is in single-shot mode. When the watchdog times out, $\overline{RST}$ goes active for a period of t_{REC}. When $\overline{RST}$ goes inactive, WDE resets to 0. Writing a value of 00h to both watchdog registers disables the watchdog timer. The watchdog function is automatically disabled upon power-up by the power-on reset setting WDE = 0 and WDS = 0. The watchdog registers are not initialized at power-up and should be initialized by the user.

Note: The TE bit must be used to disable transfers when writing to the watchdog registers.

The following summarizes the configurations in which the watchdog can be used:

WDE = 0 and WDS = 0: WDF is set.
WDE = 0 and WDS = 1: WDF is set.
WDE = 1 and WDS = 0: WDF and IRQF are set, and the $\overline{IRQ}$ pin is pulled low.
WDE = 1 and WDS = 1: WDF is set, the $\overline{RST}$ pin pulses low, and WDE resets to 0.

WAKEUP/KICKSTART

The DS1500 incorporates a wakeup feature, which powers on at a predetermined date by activating the $\overline{PWR}$ output pin. In addition, the kickstart feature allows the system to be powered up in response to a low-going transition on the $\overline{KS}$ pin, without operating voltage applied to the V_{CCI} pin. As a result, system power can be applied upon such events as key closure, or a modem-ring-detects signal. To use either the wakeup or the kickstart features, the DS1500 must have an auxiliary battery connected to the V_{BAUX} pin, and the oscillator must be running.

The wakeup feature is controlled through the time-of-day/date power-enable bit (TPE). Setting TPE to 1 enables the wakeup feature. Transfers (TE) must be enabled for a wake up event to occur. Writing TPE to 0 disables the wakeup feature. Similarly, the kickstart feature is controlled through the kickstart interrupt-enable bit (KIE).

If the wakeup feature is enabled, while the system is powered down (no V_{CCI} voltage), the clock/calendar monitors the current day or date for a match condition with day/date alarm register (0Bh). With the day/date alarm register, the hours, minutes, and seconds alarm bytes in the clock/calendar register map (02h, 01h, and 00h) are also monitored. As a result, a wakeup occurs at the day or date and time specified by the day/date, hours, minutes, and seconds alarm register values. This additional alarm occurs regardless of the programming of the TIE bit. When the match condition occurs, the $\overline{PWR}$ pin is automatically driven low. This output can turn on the main system power supply, which provides V_{CCI} voltage to the DS1500 as well as the other major components in the system. Also, at this time, the time-of-day/date alarm flag is set, indicating that a wakeup condition has occurred.

If V_{BAUX} is present, while V_{CC} is low, the $\overline{KS}$ input pin is monitored for a low-going transition of minimum pulse width t_{KSPW}. When such a transition is detected, the $\overline{PWR}$ line is pulled low, as it is for a wakeup condition. Also at this time, KSF is set, indicating that a kickstart condition has occurred. The $\overline{KS}$ input pin is always enabled and must not be allowed to float.

The timing associated with these functions is divided into five intervals, labeled 1 to 5 on the diagram.

The occurrence of either a kickstart or wakeup condition causes the $\overline{PWR}$ pin to be driven low, as described above. During Interval 1, if the supply voltage on the V_{CCI} pin rises above the greater of V_{BAT} or V_{PF} before the power-on timeout period (t_{POTO}) expires, then $\overline{PWR}$ remains at the active-low level. If V_{CCI} does not rise above the greater of V_{BAT} or V_{PF} in this time, then the $\overline{PWR}$ output pin is turned off and returns to its high-impedance level. In this event, the $\overline{IRQ}$ pin also remains tri-stated. The interrupt flag bit (either TDF or KSF) associated with the attempted power-on sequence remains set until cleared by software during a subsequent system power-on.

If V_{CCI} is applied within the timeout period, then the system power-on sequence continues, as shown in Intervals 2 to 5 in the timing diagram. During Interval 2, $\overline{PWR}$ remains active, and $\overline{IRQ}$ is driven to its active-low level, indicating that either TDF or KSF was set in initiating the power-on. In the diagram, $\overline{KS}$ is assumed to be pulled up to the V_{BAUX} supply. Also at this time, the PAB bit is automatically cleared to 0 in response to a successful power-on. The $\overline{PWR}$ line remains active as long as the PAB remains cleared to 0.

At the beginning of Interval 3, the system processor has begun code execution and clears the interrupt condition of TDF and/or KSF by writing 0s to both of these control bits. As long as no other interrupt within the DS1500 is pending, the $\overline{IRQ}$ line is taken inactive once these bits are reset, and execution of the application software can proceed. During this time, the wakeup and kickstart functions can be used to generate status and interrupts. TDF is set in response to a day/date, hours, minutes, and seconds match condition. KSF is set in response to a low-going transition on $\overline{KS}$. If the associated interrupt-enable bit is set (TDE and/or KIE), then the $\overline{IRQ}$ line is driven low in response to enabled event. In addition, the other possible interrupt sources within the DS1500 can cause $\overline{IRQ}$ to be driven low. While system power is applied, the on-chip logic always attempts to drive the $\overline{PWR}$ pin active in response to the enabled kickstart or wakeup condition. This is true even if $\overline{PWR}$ was previously inactive as the result of power being applied by some means other than wakeup or kickstart.
The system can be powered down under software control by setting the PAB bit to 1. This causes the open-drain $\overline{PWR}$ pin to be placed in a high-impedance state, as shown at the beginning of Interval 4 in the timing diagram. As V_{CCI} voltage decays, the $\overline{IRQ}$ output pin is placed in a high-impedance state when V_{CCI} goes below V_{PF}. If the system is to be again powered on in response to a wakeup or kickstart, then both the TDF and KSF flags should be cleared, and TPE and/or KIE should be enabled prior to setting the PAB bit.

During Interval 5, the system is fully powered down. Battery backup of the clock calendar and NV RAM is in effect and $\overline{IRQ}$ is tri-stated, and monitoring of wakeup and kickstart takes place. If PRS = 1, $\overline{PWR}$ stays active; otherwise, if PRS = 0, $\overline{PWR}$ is tri-stated.

SQUARE-WAVE OUTPUT

The square-wave output is enabled and disabled through the $\overline{E32K}$ bit. If the square wave is enabled ($\overline{E32K}$ = 0) and the oscillator is running, then a 32.768kHz square wave is output on the SQW pin. If the battery-backup 32kHz-enable bit (BB32) is enabled, and voltage is applied to V_{BAUX}, then the 32.768kHz square wave is output on the SQW pin in the absence of V_{CCI}.

BATTERY MONITOR

The DS1500 constantly monitors the battery voltage of the backup-battery sources (V_{BAT} and V_{BAUX}). The battery low flags BLF1 and BLF2 are set to 1 if the battery voltages on V_{BAT} and V_{BAUX} are less than 2.5V (typical); otherwise, BLF1 and BLF2 are 0. BLF1 monitors V_{BAT} and BLF2 monitors V_{BAUX}.

256 x 8 EXTENDED RAM

The DS1500 provides 256 x 8 of on-chip SRAM, which is controlled as nonvolatile storage sustained from a lithium battery. On power-up, the RAM is taken out of write-protect status by an internal signal.

Two on-chip latch registers control access to the SRAM. One register is used to hold the SRAM address; the other is used to hold read/write data. The SRAM address space is from 00h to FFh. The 8-bit address of the RAM location to be accessed must be loaded into the extended RAM address register located at 10h. Data in the addressed location can be read by performing a read operation from location 13h, or written to by performing a write operation to location 13h. Data in any addressed location can be read or written repeatedly with changing the address in location 10h.

To read or write consecutive extended RAM locations, a burst mode feature can be enabled to increment the extended RAM address. To enable the burst mode feature, set the BME bit to 1. With burst mode enabled, write the extended RAM starting address location to register 10h. Then read or write the extended RAM data from/to register 13h. The extended RAM address locations are automatically incremented on the rising edge of $\overline{OE}$, $\overline{CS}$, $\overline{WE}$ only when register 13h is being accessed (Figure 4). The address pointer wraps around after the last address is accessed.

PIN CONFIGURATION

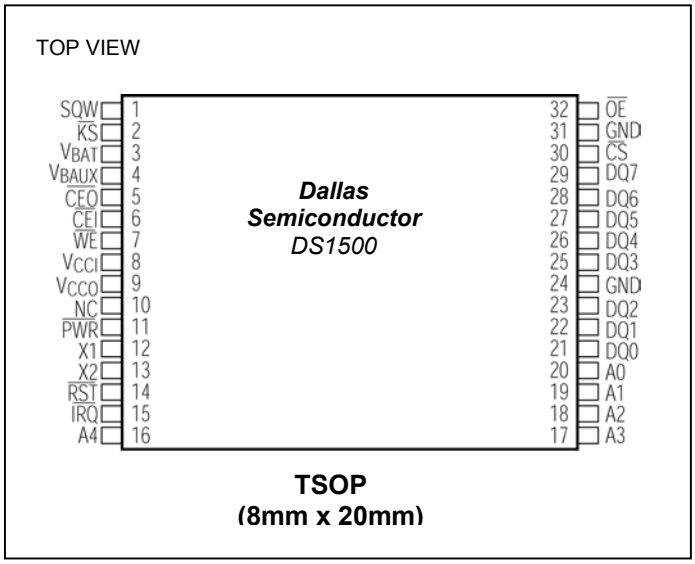

TYPICAL OPERATING CIRCUIT

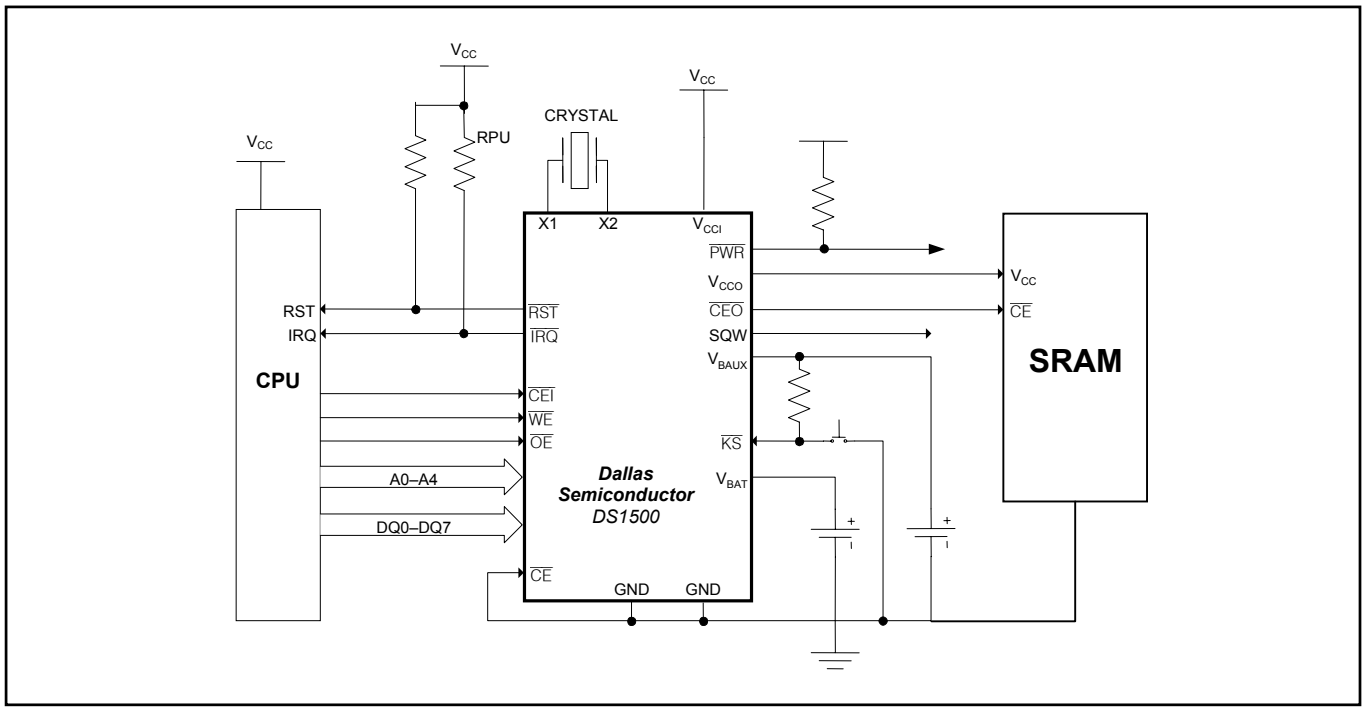

PACKAGE INFORMATION

(For the latest package outline information, go to **www.maxim-ic.com/DallasPackInfo**.)

Maxim/Dallas Semiconductor cannot assume responsibility for use of any circuitry other than circuitry entirely embodied in a Maxim/Dallas Semiconductor product. No circuit patent licenses are implied. Maxim/Dallas Semiconductor reserves the right to change the circuitry and specifications without notice at any time.

Maxim Integrated Products, 120 San Gabriel Drive, Sunnyvale, CA 94086 408-737-7600

© 2005 Maxim Integrated Products • Printed USA

The Maxim logo is a registered trademark of Maxim Integrated Products, Inc. The Dallas logo is a registered trademark of Dallas Semiconductor Corporation.

НИОКР СИСТЕМС

ООО «НИОКРсистемс» - это оперативные поставки широкого спектра электронных компонентов отечественного и импортного производства напрямую от производителей и с крупнейших мировых складов. Реализуемая нашей компанией продукция насчитывает более полумиллиона наименований.

Благодаря этому наша компания предлагает к поставке практически не ограниченный ассортимент компонентов как оптовыми, мелкооптовыми партиями, так и в розницу.

Благодаря развитой сети поставщиков, помогаем в поиске и приобретении экзотичных или снятых с производства компонентов.

Наша компания это:

- Гарантия качества поставляемой продукции
- Широкий ассортимент
- Минимальные сроки поставок
- Техническая поддержка
- Подбор комплектации
- Индивидуальный подход
- Гибкое ценообразование
- Работаем по 275 ФЗ

ООО «НИОКР СИТЕМС»
Москва, 125362, Россия, ул. Вишневая, д. 9, к. 1, Блок 104 а и 104 в

Телефон: 8 (495) 268-14-82
Email: n@nsistems.ru

ИНН: 7735154786
ОГРН: 1167746717709