SamplePort Stereo Asynchronous Sample Rate Converters

AD1890/AD1891

FEATURES

Automatically Sense Sample Frequencies—No Programming Required
Tolerant of Sample Clock Jitter
Smooth Transition When Sample Clock Frequencies Cross
Accommodate Dynamically Changing Asynchronous Sample Clocks
8 kHz to 56 kHz Sample Clock Frequency Range
1:2 to 2:1 Ratio Between Sample Clocks
–106 dB THD+N at 1 kHz (AD1890)
120 dB Dynamic Range (AD1890)
Optimal Clock Tracking Control
–Short/Long Group Delay Modes
–Slow/Fast Settling Modes
Linear Phase in All Modes
Equivalent of 4 Million 22-Bit FIR Filter Coefficients Stored On-Chip
Automatic Output Mute
Flexible Four Wire Serial Interfaces
Low Power

APPLICATIONS

Digital Mixing Consoles and Digital Audio Workstations
CD-R, DAT, DCC and MD Recorders
Multitrack Digital Audio and Video Tape Recorders
Studio to Transmitter Links
Digital Audio Signal Routers/Switches
Digital Audio Broadcast Equipment
High Quality D/A Converters
Digital Tape Recorder Varispeed Applications
Computer Communication and Multimedia Systems

SYSTEM DIAGRAM

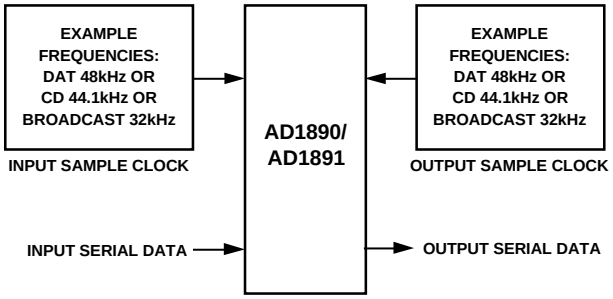

PRODUCT OVERVIEW

The AD1890 and AD1891 SamplePorts™ are fully digital, stereo Asynchronous Sample Rate Converters (ASRCs) that solve sample rate interfacing and compatibility problems in digital audio equipment. Conceptually, these converters interpolate the input data up to a very high internal sample rate with a time resolution of 300 ps, then decimate down to the desired output sample rate. The AD1890 is intended for 18- and 20-bit professional applications, and the AD1891 is intended for 16-bit lower cost applications where large dynamic sample-rate changes are not encountered. These devices are asynchronous because the frequency and phase relationships between the input and output sample clocks (both are inputs to the AD1890/AD1891 ASRCs) are arbitrary and need not be related by a simple integer ratio. There is no need to explicitly select or program the input and output sample clock frequencies, as the AD1890/AD1891 automatically sense the relationship between the two clocks. The input and output sample clock frequencies can nominally range from 8 kHz to 56 kHz, and the ratio between them can vary from 1:2 to 2:1.

The AD1890/AD1891 use multirate digital signal processing techniques to construct an output sample stream from the input sample stream. The input word width is 4 to 20 bits for the AD1890 or 4 to 16 bits for the AD1891. Shorter input words are automatically zero-filled in the LSBs. The output word width for both devices is 24 bits. The user can receive as many of the output bits as desired. Internal arithmetic is performed with 22-bit coefficients and 27-bit accumulation. The digital samples are processed with unity gain.

The input and output control signals allow for considerable flexibility for interfacing to a variety of DSP chips, AES/EBU receivers and transmitters and for I^2S compatible devices. Input and output data can be independently justified to the left/right clock edge, or delayed by one bit clock from the left/right clock edge. Input and output data can also be independently justified to the word clock rising edge or delayed by one bit clock from the word clock rising edge. The bit clocks can also be independently configured for rising edge active or falling edge active operation.

The AD1890/AD1891 SamplePort™ ASRCs have on-chip digital coefficients that correspond to a highly oversampled 0 kHz to 20 kHz low-pass filter with a flat passband, a very narrow transition band, and a high degree of stopband attenuation. A subset of these filter coefficients are dynamically chosen on the basis of the filtered instantaneous ratio between the input sample clock ($L\overline{R}$_I) and the output sample clock ($L\overline{R}$_O), and these coefficients are used in an FIR convolver to perform the sample rate conversion. Refer to the "Theory of Operation" section of this data sheet for a more thorough functional description. The low-pass filter has been designed so that full 20 kHz bandwidth is maintained when the input and output sample clock frequencies are as low as 44.1 kHz. If the output sample rate drops below the input sample rate, the bandwidth of the input signal is

(*continued on Page 4*)

SamplePort and SamplePorts are trademarks of Analog Devices, Inc.

REV. 0

Information furnished by Analog Devices is believed to be accurate and reliable. However, no responsibility is assumed by Analog Devices for its use, nor for any infringements of patents or other rights of third parties which may result from its use. No license is granted by implication or otherwise under any patent or patent rights of Analog Devices.

One Technology Way, P.O. Box 9106, Norwood, MA 02062-9106, U.S.A.
Tel: 617/329-4700 **Fax: 617/326-8703**

TEST CONDITIONS UNLESS OTHERWISE NOTED

Supply Voltage	+5.0	V
Ambient Temperature	25	°C
MCLK	20	MHz
Load Capacitance	100	pF

All minimums and maximums tested except as noted.

PERFORMANCE (Guaranteed over 0°C ≤ T_A ≤ 70°C, V_{DD} = 5.0 V ± 10%, 8 MHz ≤ MCLK ≤ 20 MHz)

	Min	Max	Units
AD1890 Dynamic Range (20 Hz to 20 kHz, –60 dB Input)†	120		dB
AD1891 Dynamic Range (20 Hz to 20 kHz, –60 dB Input)†	96		dB
Total Harmonic Distortion + Noise†			dB
AD1890 and AD1891 (20 Hz to 20 kHz, Full-Scale Input, F_{SOUT}/F_{SIN} Between 0.5 and 2.0)		–94	dB
AD1890 (1 kHz Full-Scale Input, F_{SOUT}/F_{SIN} Between 0.7 and 1.4)		–106	dB
AD1890 (10 kHz Full-Scale Input, F_{SOUT}/F_{SIN} Between 0.7 and 1.4)		–100	dB
AD1891 (1 kHz Full-Scale Input, F_{SOUT}/F_{SIN} Between 0.7 and 1.4)		–96	dB
AD1891 (10 kHz Full-Scale Input, F_{SOUT}/F_{SIN} Between 0.7 and 1.4)		–95	dB
Interchannel Phase Deviation†		0	Degrees
Input and Output Sample Clock Jitter† (For ≤ 1 dB Degradation in THD+N with 10 kHz Full-Scale Input, Slow-Settling Mode)	10		ns

DIGITAL INPUTS (Guaranteed over 0°C ≤ T_A ≤ 70°C, V_{DD} = 5.0 V ± 10%, 8 MHz ≤ MCLK ≤ 20 MHz)

	Min	Max	Units
V_{IH}	2.2		V
V_{IL}		0. 8	V
I_{IH} @ V_{IH} = +5 V		4	µA
I_{IL} @ V_{IL} = 0 V		4	µA
V_{OH} @ I_{OH} = –4 mA	3.6		V
V_{OL} @ I_{OL} = 4 mA		0.4	V
Input Capacitance†		15	pF

DIGITAL TIMING (Guaranteed over 0°C ≤ T_A ≤ 70°C, V_{DD} = 5.0 V ± 10%, 8 MHz ≤ MCLK ≤ 20 MHz)

		Min	Max	Units
t_{MCLK}	MCLK Period	50	125	ns
f_{MCLK}	MCLK Frequency ($1/t_{MCLK}$)	8	20	MHz
t_{MPWL}	MCLK LO Pulse Width	20		ns
t_{MPWH}	MCLK HI Pulse Width	20		ns
f_{LRI}	$\overline{LR}$_I Frequency with 20 MHz MCLK†	10	70	kHz
t_{RPWL}	$\overline{RESET}$ LO Pulse Width	100		ns
t_{RS}	$\overline{RESET}$ Setup to MCLK Falling	15		ns
t_{BCLK}	BCLK_I/O Period†	80		ns
f_{BCLK}	BCLK_I/O Frequency (l/t_{BCLK})†		12.5	MHz
t_{BPWL}	BCLK_I/O LO Pulse Width	40		ns
t_{BPWH}	BCLK_I/O HI Pulse Width	40		ns
t_{WSI}	WCLK_I Setup to BCLK_I	15		ns
t_{WSO}	WCLK_O Setup to BCLK_O	30		ns
t_{LRSI}	LR_I Setup to BCLK_I	15		ns
t_{LRSO}	LR_O Setup to BCLK_O	30		ns
t_{DS}	Data Setup to BCLK_I	0		ns
t_{DH}	Data Hold from BCLK_I	25		ns
t_{DPD}	Data Propagation Delay from BCLK_O		40	ns
t_{DOH}	Data Output Hold from BCLK_O	5		ns

POWER (0°C ≤ T_A ≤ 70°C, MCLK = 16 MHz, F_{SIN} = 48 kHz, F_{SOUT} = 44.1 kHz)

	Min	Typ	Max	Units
Supplies				
Voltage, V_{DD}	2.7		5.5	V
Current, I_{DD} (V_{DD} = 5.0 V)		35	40	mA
Current, I_{DD} (V_{DD} = 3.0 V)		19		mA
Dissipation				
Operation (V_{DD} = 5.0 V)		175	200	mW
Operation (V_{DD} = 3.0 V)		57		mW

TEMPERATURE RANGE

	Min	Max	Units
Specifications Guaranteed	0	+70	°C
Operation Guaranteed	–40	+85	°C
Storage	–60	+100	°C

ABSOLUTE MAXIMUM RATINGS*

	Min	Max	Units
V_{DD} to GND	–0.3	7.0	V
DC Input Voltage	–0.3	V_{DD} + 0.3	V
Latch-Up Trigger Current	–1000	+1000	mA
Soldering		+300	°C
		10	sec

*Stresses greater than those listed under "Absolute Maximum Ratings" may cause permanent damage to the device. This is a stress rating only and functional operation of the device at these or any other conditions above those indicated in the operational section of this specification is not implied. Exposure to absolute maximum rating conditions for extended periods may affect device reliability.

DIGITAL FILTER CHARACTERISTICS†

	Min	Max	Units
Passband Ripple (0 to 20 kHz)		0.01	dB
Transition Band[1]		4. 1	kHz
Stopband Attenuation	110		dB
Group Delay ($L\overline{R}_I$ = 50 kHz)	700	3000	µs

†Guaranteed. Not Tested
[1]Valid only when $F_{SOUT} \geq F_{SIN}$ (i.e., upsampling), F_{SIN} = 44.1 kHz.
Specifications subject to change without notice.

ORDERING GUIDE

Model	Temperature Range	Package Description	Package Option
AD1890JN	0°C to +70°C	Plastic DIP	N-28
AD1890JP	0°C to +70°C	PLCC	P-28A
AD1891JN	0°C to +70°C	Plastic DIP	N-28
AD1891JP	0°C to +70°C	PLCC	P-28A

CAUTION

ESD (electrostatic discharge) sensitive device. Electrostatic charges as high as 4000 V readily accumulate on the human body and test equipment and can discharge without detection. Although the AD1890/AD1891 features proprietary ESD protection circuitry, permanent damage may occur on devices subjected to high energy electrostatic discharges. Therefore, proper ESD precautions are recommended to avoid performance degradation or loss of functionality.

(continued from Page 1)

PRODUCT OVERVIEW (Continued)

automatically limited to avoid alias distortion on the output signal. The AD1890/AD1891 dynamically alter the low-pass filter cutoff frequency smoothly and slowly, so that real-time variations in the sample rate ratio are possible without degradation of the audio quality.

The AD1890/AD1891 have a pin selectable slow- or fast-settling mode. This mode determines how quickly the ASRCs adapt to a change in either the input sample clock frequency (F_{SIN}) or the output sample clock frequency (F_{SOUT}). In the slow-settling mode, the control loop which computes the ratio between F_{SIN} and F_{SOUT} settles in approximately 800 ms and begins to reject jitter above 3 Hz. The slow-settling mode offers the best signal quality and the greatest jitter rejection. In the fast-settling mode, the control loop settles in approximately 200 ms and begins to reject jitter above 12 Hz. The fast-settling mode allows rapid, real time sample rate changes to be tracked without error, at the expense of some narrow-band noise modulation products on the output signal.

The AD1890 also has a pin selectable, short or long group delay mode. This pin determines the depth of the First-In, First-Out (FIFO) memory which buffers the input data samples before they are processed by the FIR convolver. In the short mode, the group delay is approximately 700 µs. The ASRC is more sensitive to sample rate changes in this mode (i.e., the pointers which manage the FIFO are more likely to cross and become momentarily invalid during a sample rate step change), but the group delay is minimized. In the long mode, the group delay is approximately 3 ms. The ASRC is tolerant of large dynamic sample rate changes in this mode, and it should be used when the device is required to track fast sample rate changes, such as in varispeed applications. The AD1891 features the short group delay mode only. In either device, if the read and write pointers that manage the FIFO cross (indicating underflow or overflow), the ASRC asserts the mute output (MUTE_O) pin HI for 128 output clock cycles. If MUTE_O is connected to the mute input (MUTE_I) pin, as it normally should be, the serial output will be muted (i.e., all bits zero) during this transient event.

The AD1890/AD1891 are fabricated in a 0.8 µm single poly, double metal CMOS process and are packaged in a 0.6" wide 28-pin plastic DIP and a 28-pin PLCC. The AD1890/AD1891 operate from a +5 V power supply over the temperature range of 0°C to +70°C.

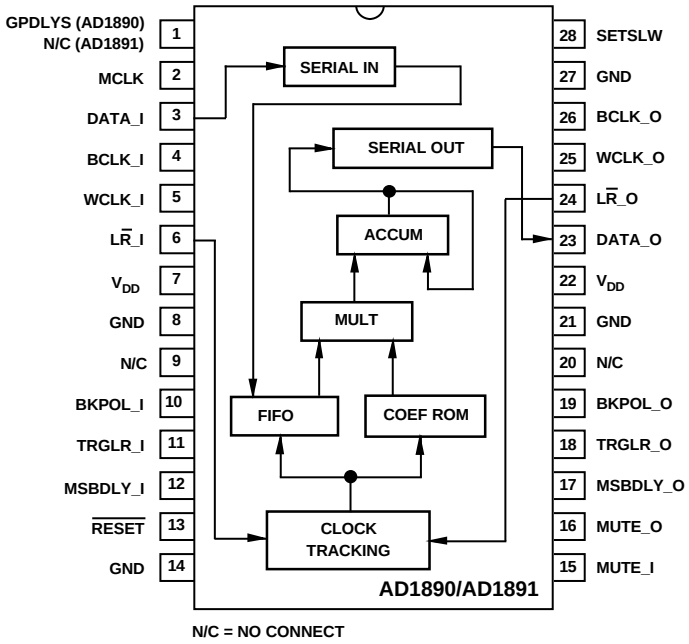

AD1890/AD1891 DIP Pinout

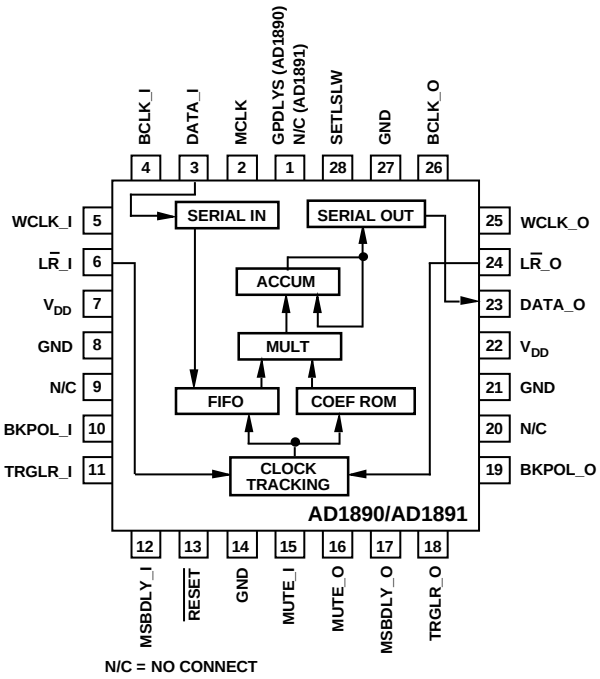

AD1890/AD1891 PLCC Pinout

DEFINITIONS

Dynamic Range

The ratio of a near full-scale input signal to the integrated noise in the passband (0 to ≈20 kHz), expressed in decibels (dB). Dynamic range is measured with a –60 dB input signal and "60 dB" arithmetically added to the result.

Total Harmonic Distortion + Noise

Total Harmonic Distortion plus Noise (THD+N) is defined as the ratio of the square root of the sum of the squares of the values of the harmonics and noise to the rms value of a sinusoidal input signal. It is usually expressed in percent (%) or decibels.

Interchannel Phase Deviation

Difference in input sampling times between stereo channels, expressed as a phase difference in degrees between 1 kHz inputs.

Group Delay

Intuitively, the time interval required for a full-level input pulse to appear at the converter's output, at full level, expressed in milliseconds (ms). More precisely, the derivative of radian phase with respect to radian frequency at a given frequency.

Transport Delay

The time interval between when an impulse is applied to the converters input and when the output starts to be affected by this impulse, expressed in milliseconds (ms). Transport delay is independent of frequency.

AD1890/AD1891 PIN LIST

Serial Input Interface

Pin Name	Number	I/O	Description
DATA_I	3	I	Serial input, MSB first, containing two channels of 4- to 20-bits of twos-complement data per channel. AD1891 ONLY: Maximum of 16 data bits per channel; additional bits ignored.
BCLK_I	4	I	Bit clock input for input data.
WCLK_I	5	I	Word clock input for input data. This input is rising edge sensitive. (Not required in L$\overline{R}$ input data clock triggered mode [TRGLR_I = HI].)
L$\overline{R}$_I	6	I	Left/$\overline{\text{right}}$ clock input for input data. Must run continuously.

Serial Output Interface

Pin Name	Number	I/O	Description
DATA_O	23	O	Serial output, MSB first, containing two channels of 4- to 24-bits of twos-complement data per channel.
BCLK_O	26	I	Bit clock input for output data.
WCLK_O	25	I	Word clock input for output data. This input is rising edge sensitive. (Not required in L$\overline{R}$ output data clock triggered mode [TRGLR_O = HI].)
L$\overline{R}$_O	24	I	Left/$\overline{\text{right}}$ clock input for output data. Must run continuously.

Input Control Signals

Pin Name	Number	I/O	Description
BKPOL_I	10	I	Bit clock polarity. LO: Normal mode. Input data is sampled on rising edges of BCLK_I. HI: Inverted mode. Input data is sampled on falling edges of BCLK_I.
TRGLR_I	11	I	Trigger on L$\overline{R}$_I. HI: Changes in L$\overline{R}$_I indicate beginning[1] of valid input data. LO: Rising edge of WCLK_I indicates beginning of valid input data.
MSBDLY_I	12	I	MSB delay. HI: Input data is delayed one BCLK_I after either L$\overline{R}$_I (TRGLR_I = HI) or WCLK_I (TRGLR_I = LO) indicates the beginning of valid input data. Included for I^2S data format compatibility. LO: No delay.

NOTE
[1]The beginning of valid data will be delayed by one BLCK_I if MSBDEL_I is selected (HI).

Output Control Signals

Pin Name	Number	I/O	Description
BKPOL_O	19	I	Bit clock polarity. LO: Normal mode. Output data is valid on rising edges of BCLK_O, changed on falling. HI: Inverted mode. Output data is valid on falling edges of BCLK_O, changed on rising.
TRGLR_O	18	I	Trigger on L$\overline{R}$_O. HI: Changes in L$\overline{R}$_O indicate beginning[1] of valid output data. LO: Rising edge of WCLK_O indicates beginning of valid output data.
MSBDLY_O	17	I	MSB delay. HI: Output data is delayed one BCLK_O after either L$\overline{R}$_O (TRGLR_O = HI) or WCLK_O (TRGLR_O = LO) indicates the beginning of valid output data. Included for I^2S data format compatibility. LO: No delay.

Miscellaneous

Pin Name	Number	I/O	Description
GPDLYS	1	I	AD1890 ONLY: Group delay—short. HI: Short group delay mode (≈700 µs). More sensitive to changes in sample rates (L$\overline{R}$ clocks). LO: Long group delay mode (≈3 ms). More tolerant of sample rate changes. This signal may be asynchronous with respect to MCLK, and dynamically changed, but is normally pulled up or pulled down on a static basis. AD1891: Short group delay mode only; this pin is a N/C.
MCLK	2	I	Master clock input. Nominally 16 MHz for sampling frequencies (F_S, word rates) from 8 kHz to 56 kHz. Exact frequency is not critical, and does not need to be synchronized to any other clock or possess low jitter.
$\overline{\text{RESET}}$	13	I	Active LO reset. Set HI for normal chip operation.
MUTE_O	16	O	Mute output. HI indicates that data is not currently valid due to read and write FIFO memory pointer overlap. LO indicates normal operation.
MUTE_I	15	I	Mute input. HI mutes the serial output to zeros (midscale). Normally connected to MUTE_O. Reset LO for normal operation.
SETLSLW	28	I	Settle slowly to changes in sample rates. HI: Slow-settling mode (≈800 ms). Less sensitive to sample clock jitter. LO: Fast-settling mode (≈200 ms). Some narrow-band noise modulation may result from jitter on L$\overline{R}$ clocks. This signal may be asynchronous with respect to MCLK, and dynamically changed, but is normally pulled up or pulled down on a static basis.
N/C	9, 20		No connect. Reserved. Do not connect.

Power Supply Connections

Pin Name	Number	I/O	Description
V_{DD}	7, 22	I	Positive digital voltage supply.
GND	8, 14, 21, 27	I	Digital ground. Pins 14 and 27 need not be decoupled.

NOTE
[1]The beginning of valid data will be delayed by one BCLK_O if MSBDEL_O is selected (Hl).

THEORY OF OPERATION

There are at least two logically equivalent methods of explaining the concept of asynchronous sample rate conversion: the high speed interpolation/decimation model and the polyphase filter bank model. Using the AD1890 and AD1891 SamplePorts does not require understanding either model. This section is included for those who wish a deeper understanding of their operation.

Interpolation/Decimation Model

In the high speed interpolation/decimation model, illustrated in Figure 1, the sampled data input signal (Plot A in Figure 1) is interpolated at some ratio (IRATIO) by inserting IRATIO-1 zero valued samples between each of the original input signal samples (Plot B in Figure 1). The frequency domain characteristics of the input signal are unaltered by this operation, except that the zero-padded sequence is considered to be sampled at a frequency which is the product of original sampling frequency multiplied by IRATIO.

The zero-padded values are fed into a digital FIR low-pass filter (Plot C in Figure 1) to smooth or integrate the sequence, and limit the bandwidth of the filter output to 20 kHz. The interpolated output signal has been quantized to a much finer time scale than the original sequence. The interpolated sequence is then passed to a zero-order hold functional block (physically implemented as a register, Plot D in Figure 1) and then asynchronously resampled at the output sample frequency (Plot E in Figure 1). This resampling can be thought of as a decimation operation since only a very few samples out of the great many interpolated samples are retained. The output values represent the "nearest" values, in a temporal sense, produced by the interpolation operation. There is always some error in the output sample amplitude due to the fact that the output sampling switch does not close at a time that exactly corresponds to a point on the fine time scale of the interpolated sequence. However, this error can be made arbitrarily small by using a very large interpolation ratio. The AD1890/AD1891 SamplePort ASRCs use an equivalent IRATIO of 65,536 to provide 16-bit accuracy (≈ –96 dB THD+N) across the 0 to 20 kHz audio band.

The number of FIR filter taps and associated coefficients is approximately 4 million. The equivalent FIR filter convolution frequency (or "upsample" frequency) is 3.2768 GHz, and the fine time scale has resolution of about 300 ps. Various proprietary efficiencies are exploited in the AD1890/AD1891 ASRCs to reduce the complexity and throughput requirements of the hardware implied by this interpolation/decimation model.

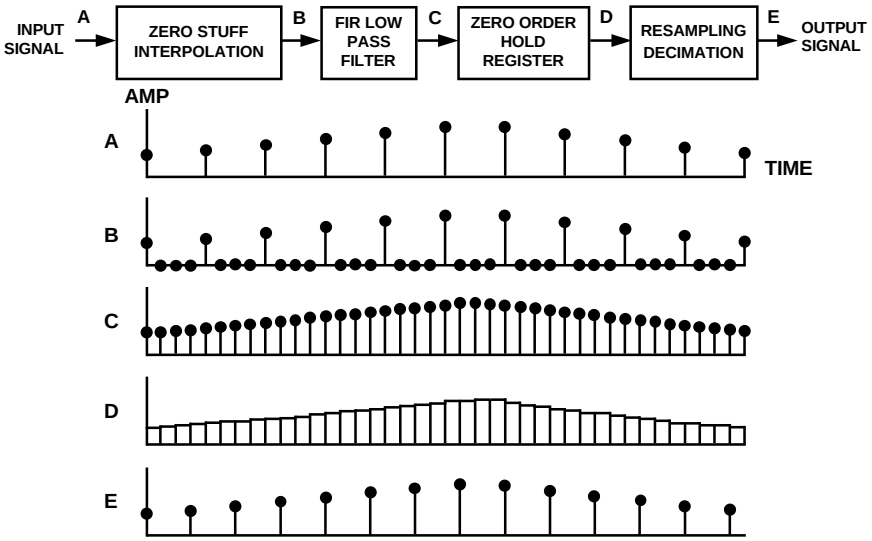

Figure 1. Interpolation/Decimation Model—Time Domain View

Polyphase Filter Bank Model

Although less intuitively understandable than the interpolation/decimation model, the polyphase filter bank model is useful to explore because it more accurately portrays the operation of the actual AD1890/AD1891 SamplePort hardware. In the polyphase filter bank model, the stored FIR filter coefficients are thought of as the impulse response of a highly oversampled 0 to 20 kHz low-pass prototype filter, as shown in Figure 2. If this low-pass filter is oversampled by a factor of N, then it can be conceptually decomposed into N different "subfilters," each filter consisting of a different subset of the original set of impulse response samples. If the temporal position of each of the subfilters is maintained, then they can be summed to recreate the original oversampled impulse response. Since the original impulse response is highly oversampled, the more sparsely sampled subfilters still individually meet the Nyquist criterion (i.e., they are adequately sampled). The baseband magnitude and phase responses of the subfilters are identical. The out-of-band (i.e., alias) regions of the subfilters however have phase responses which are shifted relative to one another, in a manner that causes them to cancel when they are summed.

The subfilter coefficients are then aligned to the left, as shown in Figure 3, so that the first coefficient of each subfilter is aligned to the first point on a coarse time scale. (This conceptual step accounts for how the hardware implementation is able to operate at the slower rate corresponding to the coarse time scale.) Each subfilter has been shifted in time by a different amount, and though they still share identical magnitude responses, they now have in-band phase responses which have fractionally different slopes (i.e., group delays).

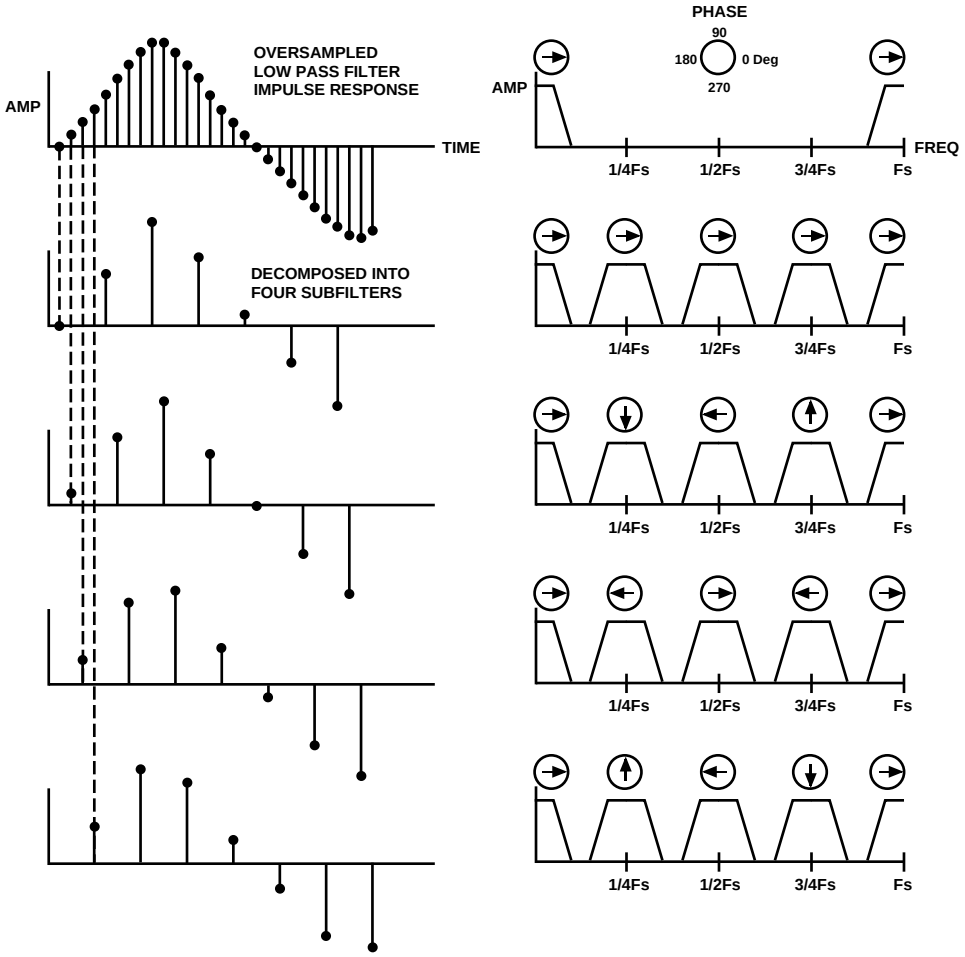

Figure 2. Four Polyphase Subfilters in the Time and Frequency Domains

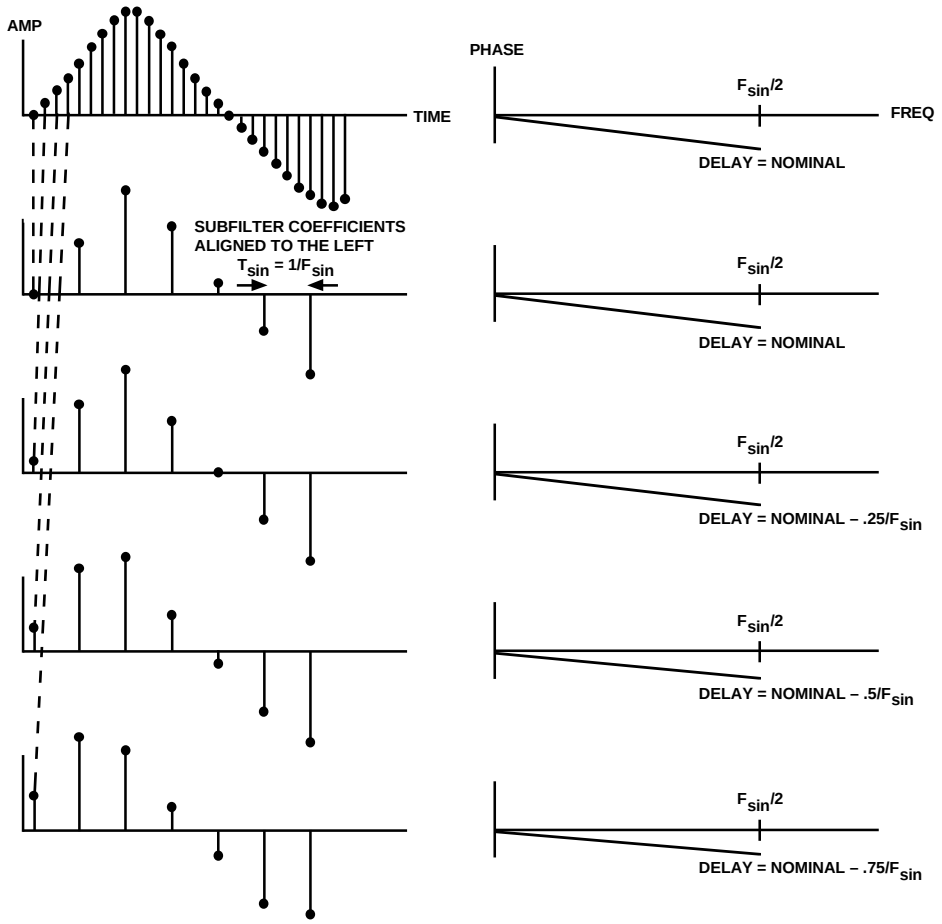

Figure 3. Four Polyphase Subfilters Realigned to Coarse Time Grid

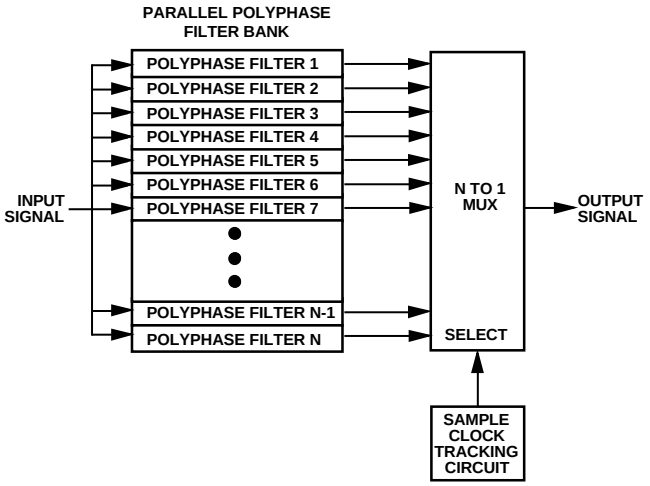

Figure 4. Polyphase Filter Bank Model—Conceptual Block Diagram

The full set of subfilters can be considered to form a parallel bank of "polyphase" filters which have decrementing, linear phase group delays. All of the polyphase filters conceptually process the input signal simultaneously, as illustrated in Figure 4, at the input sample rate.

Asynchronous sample rate conversion under the polyphase filter bank model is accomplished by selecting the output of a particular polyphase filter on the basis of the temporal relationship between the input sample clock and the output sample clock events. Figure 5 shows the desired filter group delay as a function of the relative time difference between the current output sample clock and the last input sample clock. If an output sample is requested late in the input sample period, then a short filter delay is required, and if an output sample is requested early in the input sample period, then a long filter delay is required. This nonintuitive result arises from the fact that FIR filters always produce some delay, so that selecting a filter with shorter delay moves the interpolated sample closer to the newest input sample.

A short delay corresponds to a large offset into the dense FIR filter coefficient array, and a long delay corresponds to a small offset. Note that because the output sample clock can arrive at any arbitrary time with respect to the input sample clock, the selection of a polyphase filter with which to convolve the input sequence occurs on every output sample clock event. Occasionally the FIFO which holds the input sequence in the FIR convolver is either not incremented, or incremented by two between output sample clocks (see periods A and B in Figure 5); this happens more often when the input and output sample clock frequencies are dissimilar than when they are close together. However, in this situation, an appropriate polyphase filter is selected to process the input signal, and thus an accurate output sample is computed. Input and output samples are not skipped or repeated (unless the input FIFO underflows or overflows), as is the case in some other sample rate converter implementations. To obtain an accurate conversion, a large number of polyphase filters are needed. The AD1890/AD1891 SamplePorts use the equivalent of 65,536 polyphase filters to achieve their professional audio quality distortion and dynamic range specifications.

Sample Clock Tracking

It should be clear that, in either model, the correct computation of the ratio between the input sample rate (as determined from the left/right input clock, $L\overline{R}_I$) and the output sample rate (as determined from the left/right output clock, $L\overline{R}_O$) is critical to the quality of the output data stream. It is straightforward to compute this ratio if the sample rates are fixed and synchronous; the challenge is to accurately track dynamically varying and asynchronous sample rates, as well as to account for jitter.

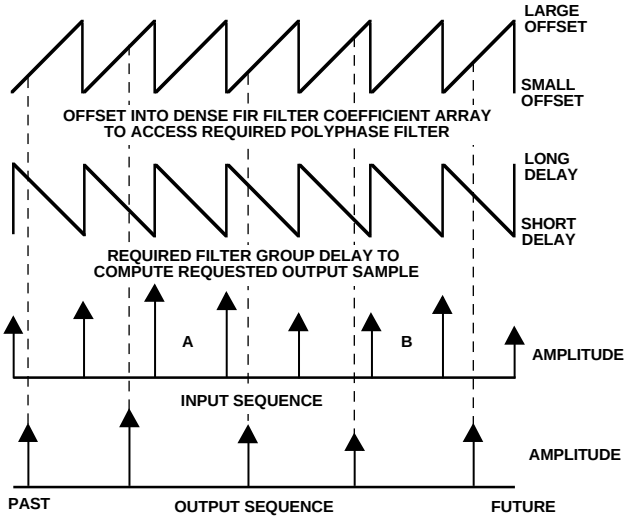

Figure 5. Input and Output Clock Event Relationship

The AD1890/AD1891 SamplePorts solve this problem by embedding the ratio computation circuit within a digital servo control loop, as shown in Figure 6. This control loop includes special provisions, to allow for the accurate tracking of dynamically changing sample rates. The outputs of the control loop are the starting read addresses for the input data FIFO and the filter coefficient ROM. These start addresses are used by the FIFO and ROM address generators, as shown in Figure 6.

The input data FIFO write address is generated by a counter which is clocked by the input sample clock (i.e., $L\overline{R}_I$). It is very important that the FIFO read address and the FIFO write address do not cross, as this means that the FIFO has either underflowed or overflowed. This consideration affects the choice of settling time of the control loop. When a step change in the sample rate occurs, the relative positions of the read and write addresses will change while the loop is settling. A fast settling loop will act to keep the FIFO read and write addresses separated better than a slow settling loop. The AD1890/AD1891 include a user selectable pin (SETLSLW) to set the loop settling time that essentially changes the coefficients of the digital servo control loop filter. The state of the SETLSLW pin can be changed on-the-fly but is normally set and forgotten.

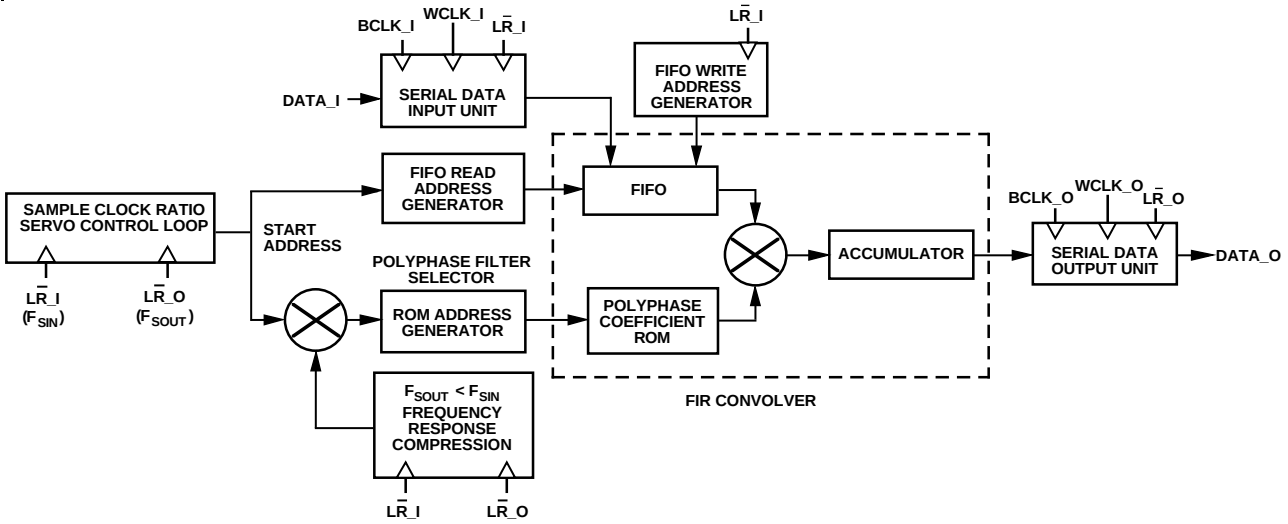

Figure 6. AD1890/AD1891 Functional Block Diagram

Sample Clock Jitter Rejection

The loop filter settling time also affects the ability of the AD1890/AD1891 ASRCs to reject sample clock jitter, since the control loop effectively computes a time weighted average or "estimated" new output of many past input and output clock events. This first order low pass filtering of the sample clock ratio provide the AD1890/AD1891 with their jitter rejection characteristic. In the slow settling mode, the AD1890/AD1891 attenuate jitter frequencies higher than 3 Hz (≈800 ms for the control loop to settle to an 18-bit "pure" sine wave), and thus reject all but the most severe sample clock jitter; performance is essentially limited only by the FIR filter. In the fast settling mode, the ASRCs attenuate jitter components above 12 Hz (≈200 ms for the control loop to settle). Due to the effects of on-chip synchronization of the sample clocks to the 16 MHz (62.5 ns) MCLK master clock, sample clock jitter must be a large percentage of the MCLK period (>10 ns) before performance degrades in either the slow or fast settling modes. Note that since both past input and past output clocks are used to compute the filtered "current" internal output clock request, jitter on both the input sample clock and the output sample clock is rejected equally. In summary: the fast settling mode is best for applications when the sample rates will be dynamically altered (e.g., varispeed situations) while the slow settling mode provides the most sample clock jitter rejection.

Clock jitter can be modeled as a frequency modulation process. Figure 7 shows one such model, where a noise source combined with a sine wave source modulates the "carrier" frequency generated by a voltage controlled oscillator.

.

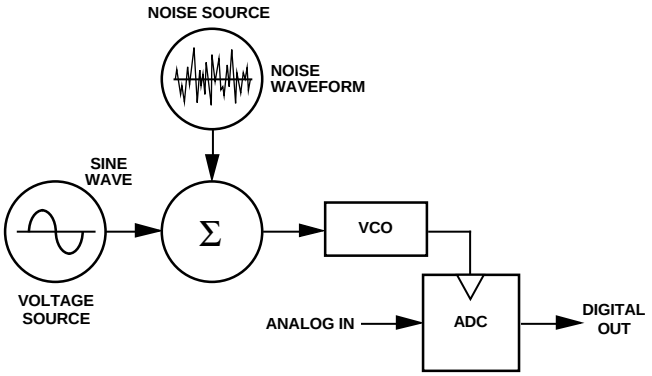

Figure 7. Clock Jitter Modeled as a Modulated VCO

If the jittered output of the VCO is used to clock an analog-to-digital converter, the digital output of the ADC will be contaminated by the presence of jitter. If the noise source is spectrally flat (i.e., "white" jitter), then an FFT of the ADC digital output would show a spectrum with a uniform noise floor which is elevated compared to the spectrum with the noise source turned off. If the noise source has distinct frequency components (i.e., "correlated" jitter), then an FFT of the ADC digital output would show symmetrical sidebands around the ADC input signal, at amplitudes and frequencies determined by frequency modulation theory. One notable result is that the level of the noise or the sidebands is proportional to the slope of the input signal, i.e., the worst case occurs at the highest frequency full-scale input (a full-scale 20 kHz sinusoid).

The AD1890/AD1891 apply rejection to these jitter frequency components referenced to the input signal. In other words, if a 5 kHz digital sinusoid is applied to the ASRC, depending on the settling mode selected, the ASRC will attenuate sample clock jitter at either 3 Hz above and below 5 kHz (slow settling) or 12 Hz above and below 5 kHz (fast settling). The rolloff is 6 dB per octave. As an example, suppose there was correlated jitter present on the input sample clock with a 1 kHz component, associated with the same 5 kHz sinusoidal input data. This would produce sidebands at 4 kHz and 6 kHz, 3 kHz and 7 kHz, etc., with amplitudes that decrease as they move away from the input signal frequency. For the slow settling mode case, 1 kHz represents more than nine octaves (relative to 3 Hz), so the first two sideband pairs would be attenuated by more than 54 dB. For the fast settling mode case, 1 kHz represents more than seven octaves (relative to 12 Hz), so that the first two sideband pairs would be attenuated by more than 42 dB. The second and higher sideband pairs are attenuated even more because they are spaced further from the input signal frequency.

Group Delay Modes

The other parameter that determines the likelihood of FIFO input overflow or output underflow is the FIFO depth. This is the parameter that is selected by the GPDLYS pin (AD1890 only; this pin is a No Connect for the AD1891). The drawback with increasing the FIFO depth is increasing the device's overall group delay, but most applications are insensitive to a small increase in group delay. [This FIFO-induced group delay is better termed transport delay, since it is frequency independent, and should be kept conceptually distinct from the notion of group delay as used in the polyphase filter bank model. The total group delay of the AD1890/AD1891 equals the FIFO transport delay plus the FIR (polyphase) filter group delay.]

In the short group delay mode, the FIFO read and write pointers are separated by five memory locations (≈100 µs equivalent transport delay at a 50 kHz sample rate). This is added to the FIR filter delay (64 taps divided by 2) for a total nominal group delay in short mode of ≈700 µs. The short group delay mode is useful when the input and output sample clocks are asynchronous but either do not vary or change very slowly.

In the long group delay mode (AD1890 only, the AD1891 is always in the short group delay mode), the FIFO read and write pointers are separated by 96 memory locations (≈2 ms equivalent transport delay). This is added to the FIR filter delay (64 taps divided by 2) for a total nominal group delay in long mode of ≈3 ms. The long group delay mode is useful when the input and output sample clocks are asynchronous and changing relative to one another, such as during varispeed effects.

These delays are deterministic and constant except when F_{SOUT} drops below F_{SIN} which causes the number of FIR filter taps to increase (see "Cutoff Frequency Modification" below). In either mode, if the FIFO read and write addresses cross, the MUTE_O signal will be asserted. Note that in all modes and under all conditions, both the highly oversampled low-pass prototype and the polyphase subfilters of the AD1890/AD1891 ASRCs possess a linear phase response.

The AD1890 has been designed so that when it is in long group delay mode and fast settling mode, a full 2:1 step change (i.e., occurring between two samples) in sample frequency ratio can be tolerated without output mute.

Cutoff Frequency Modification

The final important operating concept of the ASRCs is the modification of the filter cutoff frequency when the output sample rate (F_{SOUT}) drops below the input sample rate (F_{SIN}), i.e., during downsampling operation. The AD1890/AD1891 automatically reduces the polyphase filter cutoff frequency under this condition. This lowering of the cutoff frequency (i.e., the reduction of the input signal bandwidth) is required to avoid alias distortion. The AD1890/AD1891 SoundPorts take advantage of the scaling property of the Fourier transform which can be stated as follows: if the Fourier transform of f(t) is F(w), then the Fourier transform of f(k × t) is F(w/k). This property can be used to linearly compress the frequency response of the filter, simply by multiplying the coefficient ROM addresses (shown in Figure 6) by the ratio of F_{SOUT} to F_{SIN} whenever F_{SOUT} is less than F_{SIN}. This scaling property works without spectral distortion because the time scale of the interpolated signal is so dense (300 ps resolution) with respect to the cutoff frequency that the discrete-time representation is a close approximation to the continuous time function.

The cutoff frequency (–3 dB down) of the FIR filter during downsampling is given by the following relation:

Downsampling Cutoff Frequency = (F_{SOUT}/44.1 kHz) × 20 kHz

The AD1890/AD1891 frequency response compression circuit includes a first order low-pass filter to smooth the filter cutoff frequency selection during dynamic sample rate conditions. This allows the ASRC to avoid objectionable clicking sounds that would otherwise be imposed on the output while the loop settles to a new sample rate ratio. Hysteresis is also applied to the filter selection with approximately 300 Hz of cutoff frequency "noise margin," which limits the available selection of cutoff frequencies to those falling on an approximately 300 Hz frequency grid. Thus if a particular sample frequency ratio was reached by sliding the output sample frequency up, it is possible that a filter will be chosen with a cutoff frequency that could differ by as much as 300 Hz from the filter chosen when the same sample frequency ratio was reached by sliding the output sample frequency down. This is necessary to ensure that the filter selection is stable even with severely jittered input sample clocks.

Note that when the filter cutoff frequency is reduced, the transition band of the filter becomes narrower since the scaling property affects all filter characteristics. The number of FIR filter taps necessarily increases because there are now a smaller number of longer length polyphase filters. Nominally, when F_{SOUT} is greater than F_{SIN}, the number of taps is 64. When F_{SOUT} is less than $F_{SIN,}$ the number of taps linearly increase to a maximum of 128 when the ratio of F_{SOUT}, to F_{SIN} equals 1:2. The number of filter taps as a function of sample clock ratio is illustrated in Figure 8. The natural consequence of this increase in filter taps is an increase in group delay.

When the AD1890/AD1891 output sample frequency is higher than the input sample frequency (i.e., upsampling operation), the cutoff frequency of the FIR polyphase filter can be greater than 20 kHz. The cutoff frequency of the FIR filter during upsampling is given by the following relation:

Upsampling Cutoff Frequency = (F_{SIN}/44.1 kHz) × 20 kHz

Noise and Distortion Phenomena

There are three noise/distortion phenomena that limit the performance of the AD1890/AD1891 ASRCs. First, there is

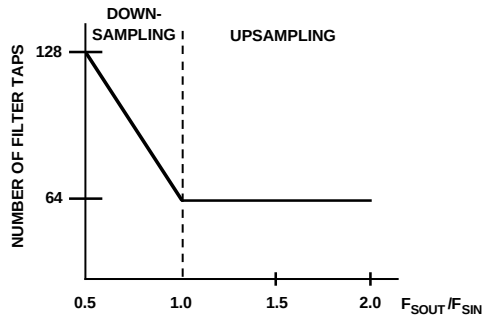

Figure 8. Number of Filter Taps as a Function of F_{SOUT}/F_{SIN}

broadband, Gaussian noise which results from polyphase filter selection quantization. Even though the AD1890/AD1891 have a large number of polyphase filters (the equivalent of 65,536) to choose from, the selection is not infinite. Second, there is narrow-band noise which results from the non-ideal synchronization of the sample clocks to the system clock MCLK, which leads to a non-ideal computation of the sample clock ratio, which leads to a non-ideal polyphase filter selection. This noise source is narrowband because the digital servo control loop averages the polyphase filter selection, leading to a strong correlation between selections from output to output. In slow mode, the selection of polyphase filters is completely unaffected by the clock synchronization. In fast mode, some narrowband noise modulation may be observed with very long FFT measurements. This situation is analogous to the behavior of a phase locked loop when presented with a noisy or jittered input. Third, there are distortion components that are due to the non-infinite stopband rejection of the low-pass filter response. Non-infinite stopband rejection means that some amount of out-of-band spectral energy will alias into the baseband. The AD1890/AD1891 performance specifications include the effects of these phenomena.

Note that Figures 15 through 17 are shown with full-scale input signals. The distortion and noise components will scale with the input signal amplitude. In other words, if the input signal is attenuated by –20 dB, the distortion and noise components will also be attenuated by –20 dB. This dependency holds until the effects of the 20-bit input quantization are reached.

OPERATING FEATURES

Serial Input/Output Ports

The AD1890/AD1891 use the frequency of the left/right input clock (LR_I) and the left/right output clock (LR_O) signals to determine the sample rate ratio, and therefore these signals must run continuously and transition twice per sample period. (The LR_I clock frequency is equivalent to F_{SIN} and the LR_O clock frequency is equivalent to F_{SOUT}.) The other clocks (WCLK_I, WCLK_O, BCLK_I, BCLK_O) are edge sensitive and may be used in a gated or burst mode (i.e., a stream of pulses during data transmission or reception followed by periods of inactivity). The word clocks and bit clocks are used only to write data into or read data out of the serial ports; only the left/right clocks are used in the internal DSP blocks. It is important that the left/right clocks are "clean" with monotonic rising and falling edge transitions and no excessive overshoot or undershoot which could cause false triggering on the AD1890/AD1891.

The AD1890/AD1891's flexible serial input and output ports consume and produce data in twos-complement, MSB-first format. The left channel data field always precedes the right channel data field; the current channel being consumed or produced is indicated by the state of the left/right clock (LR_I and LR_O). A left channel field, right channel field pair is called a frame. The input data field consists of 4 to 20 bits for the AD1890, and 4 to 16 bits for the AD1891. The output data field consists of 4 to 24 bits for both devices. The input signals are specified to TTL logic levels, and the outputs swing to full CMOS logic levels. The ports are configured by pin selections.

Serial I/O Port Modes

The AD1890/AD1891 has pin-selectable bit clock polarity for the input and output ports. In "normal" mode (BKPOL_I or BKPOL_O LO) the data is valid on the rising edge. In the "inverted" mode (BKPOL_I or BKPOL_O HI) the data is valid on the falling edge. Both modes are shown in Figures 22 and 23.

In the pin selectable MSB delay mode, which can be set independently for the input and output ports, the MSB is delayed by one bit clock. This is useful for I^2S format compatibility and for ease of interfacing to some DSP processors. Both the MSB delay mode (MSBDLY_I or MSBDLY_O HI) and the MSB non-delay mode (MSBDLY_I or MSBDLY_O LO) are shown in Figures 22 and 23.

The AD1890/AD1891 SamplePort serial ports operate in either the word clock (WCLK_I, WCLK_O) triggered mode or left/right clock (LR_I, LR_O) triggered mode. These modes can be utilized independently for the input and output ports, by resetting or setting the TRGLR_I and TRGLR_O control lines respectively. In the word clock triggered mode, as shown in Figure 22, after the left/right clock is valid, the appearance of the MSB of data is synchronous with the rising edge of the word clock (or delayed by one bit clock if the MSB delay mode is selected). Note that the word clock is rising edge sensitive, and can fall anytime after it is sampled HI by the bit clock. In the left/right clock triggered mode, as shown in Figure 23, the appearance of the MSB of data is synchronous with the rising edge of the left/right clock for the left channel and the falling edge of left/right clock for the right channel. The MSB is delayed by one bit clock after the left/right clock if the MSB delay mode is selected. The word clock is not required in the left/right clock triggered mode, and should be tied either HI or LO. Figure 23 shows the bit clock in the optional gated or burst mode; the bit clock is inactive between data fields, and can take either the HI state or the LO state while inactive.

Note that there is no requirement for a delay between the left channel data and the right channel data. The left/right clocks and the word clocks can transition immediately after the LSB of the data, so that the MSB of the subsequent channel appears without any timing delay. The AD1891 is therefore capable of a 32-bit frame mode, in which both 16-bit channels are packed into a 32-bit clock period. More generally, there is no particular requirement for when the left/right clock falls (i.e., there is no left/right clock duty cycle or pulse width specification), provided that the left/right clock frequency equals the intended sample frequency, and there are sufficient bit clock periods to clock in or out the intended number of data bits.

Control Signals

The GPDLYS, SETLSLW, BKPOL_I, BKPOL_O, TRGLR_I, TRGLR_O, MSBDLY_I, and MSBDLY_O inputs are asynchronous signals in that they need obey no particular timing relation to MCLK or the sample clocks. Ordinarily, these pins are hardwired or connected to an I/O register for microprocessor control. The only timing requirement on these pins is that the control signals are stable and valid before the first serial input data bit (i.e., the MSB) is presented to the AD1890/AD1891.

Reset

Figure 25 shows the reset timing for the AD1890/AD1891 SamplePorts. MCLK must be running when RESET is asserted, and the bit clocks, the word clocks and the left/right clocks may also be running. When the AD1890/AD1891 come out of reset, they default to a F_{SIN} to F_{SOUT} ratio of 1:1. The filter pipeline is not cleared. However, the mute output goes HI for at least 128 cycles, adequate to allow the pipeline to clear. If F_{SIN} differs significantly from F_{SOUT}, then the AD1890/AD1891 sample clock servo control loop also has to settle. While settling, the mute output will be HI. After the external system resets the AD1890/AD1891, it should wait until the mute output goes LO before clocking in serial data.

There is no requirement for using the RESET pin at power-up or when the input or output sample rate changes. If it is not used, the AD1890/AD1891 will settle to the sample clocks supplied within ≈200 ms in fast-settling mode or within ≈800 ms in slow-settling mode.

APPLICATION ISSUES

Dither

Due to the large output word length, no redithering of the AD1890/AD1891 output is necessary. This assumes that the input is properly dithered and the user retains the same or greater number of output bits as there are input bits. The AD1890/AD1891 output bit stream may thus be used directly as the input to downstream digital audio processors, storage media or output devices.

If the AD1890/AD1891 is to be used to dramatically down-sample (i.e., output sample frequency is much lower than input sample frequency), the input should be sufficiently dithered to account for the limiting of the input signal bandwidth (which reduces the RMS level of the input dither). No dither is internally used or applied to the audio data in the AD1890/AD1891 SamplePorts.

Decoupling and PCB Layout

The AD1890/AD1891 ASRCs have two power (Pins 7 and 22) and two ground (Pins 8 and 21) connections to minimize output switching noise and ground bounce. [Pins 14 and 27 are actually control inputs, and should be tied LO, but need not be decoupled.] The DIP version places these pins at the center of the device to optimize switching performance. The AD1890/AD1891 should be decoupled with two high quality 0.1 µF or 0.01 µF ceramic capacitors (preferably surface mount chip capacitors, due to their low inductance), one between each V_{DD}/GND pair. Best practice PCB layout and interconnect guidelines should be followed. This may include terminating MCLK or the bit clocks if excessive overshoot or undershoot is evident and avoiding parallel PCB traces to minimize digital crosstalk between clocks and control lines. Note that DIP and PLCC sockets reduce electrical performance due to the additional inductance they impose; sockets should therefore be used only when required.

Master Clock

Using a 16 MHz MCLK, the nominal range of sample frequencies that the AD1890/AD1891 accept is from 8 kHz to 56 kHz. Other sample frequency ranges are possible by linearly scaling the MCLK frequency. For example, a 12 MHz MCLK would yield a sample frequency range of 6 kHz to 42 kHz, and a 20 MHz MCLK would yield a sample frequency range of 10 kHz to 70 kHz. The approximate relative upper bound sample frequency is the MCLK frequency divided by 286; the approximate relative lower bound sample frequency is the MCLK frequency divided by 2000. The audio performance will not degrade if the sample frequencies are kept within these bounds. The AD1890/AD1891 SamplePorts are production tested with a 20 MHz MCLK. Note that due to MCLK-driven finite register length constraints, there is a minimum input sample frequency ($L\overline{R}$_I). The allowable input and output sample frequency ranges for MCLK frequencies of 20 MHz, 16 MHz and 12 MHz are shown in Figures 9, 10 and 11.

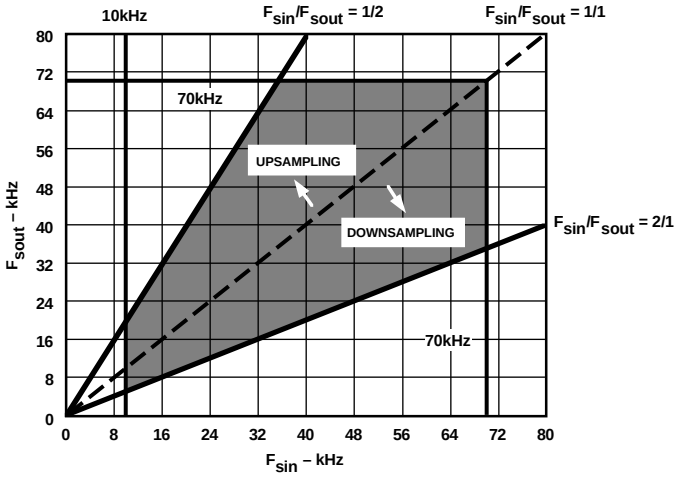

Figure 9. Allowable Input and Output Sample Frequencies MCLK = 20 MHz Case

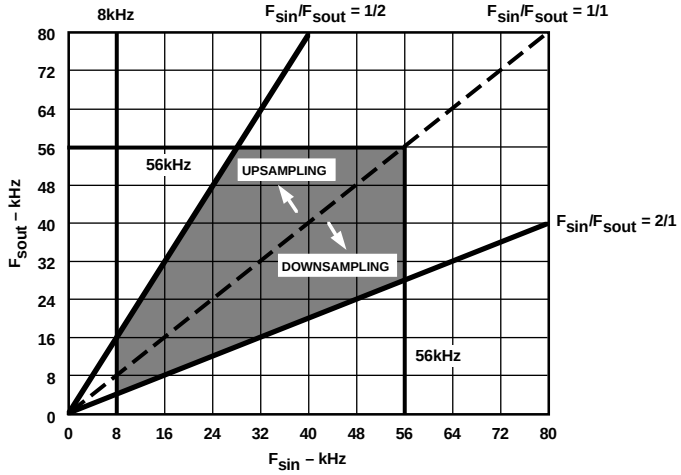

Figure 10. Allowable Input and Output Sample Frequencies MCLK = 16 MHz Case

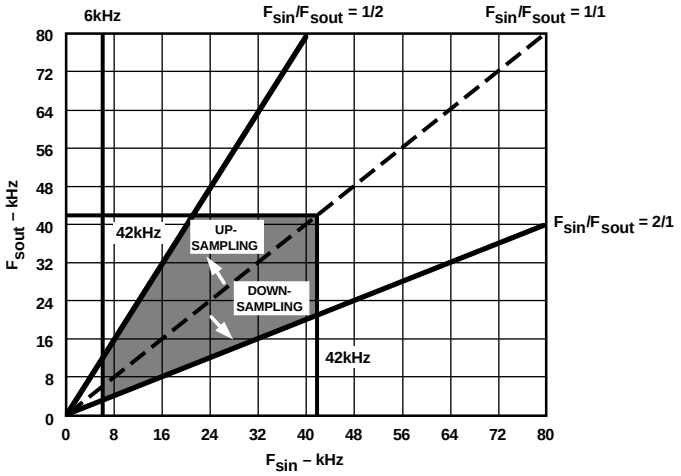

Figure 11. Allowable Input and Output Sample Frequencies MCLK = 12 MHz Case

Multiple ASRC Synchronization and Performance Degradation

Multiple parallel AD1890/AD1891 ASRCs may be used in a single system. Multiple AD1890/AD1891s can be "synchronized" by simply sharing the same reset and MCLK lines, and ensuring that all the ASRCs leave the reset state on the same MCLK falling edge. No other provision is necessary since the different AD1890/AD1891s will process samples identically if they are presented with the same input and output clocks (neglecting the effect of excessive clock skew on the PCB, as well process variations between ASRCs which could cause different devices to trigger at slightly different times on excessively slow rising or falling clock edges).

It is also likely that several AD1890/AD1891s could end up in a serial cascade arrangement, either in a single systems design or as the result of two or more systems, each using a single AD1890/AD1891 in the signal path. The audio signal quality will be degraded with each pass through an ASRC, though to a very minor degree. The THD+N performance will degrade by 3 dB with every doubling of the number of passes through an ASRC. For example, the AD1890 THD+N specification of –106 dB (at 1 kHz) will rise to –103 dB if the signal makes two passes through an ASRC. The overall system THD+N specification will rise to –100 dB with four passes, and so on.

Clipping

Under certain rare input conditions, it is possible for the AD1890/AD1891 ASRC to produce a clipped output sample. This situation is best comprehended by employing the interpolation/decimation model. If two consecutive samples happened to have full-scale amplitudes (representing the peak of a full-scale sine wave, for example), the interpolated sample (or samples) between these two samples might have an amplitude greater than full scale. As this is not possible, the AD1890/AD1891 will compute a full-scale amplitude for the interpolated sample or samples (see Figure 12). Clipping can also arise due to the pre-echo and post-echo Gibbs phenomena of the FIR filter, when presented with a full-scale step input. The result of this erroneous or clipped output sample may be measured as an extremely small decrease in headroom for transient signals.

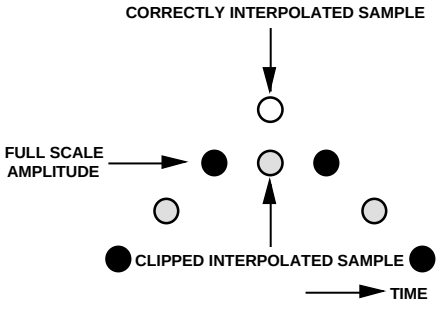

Figure 12. Clipped Output Sample

Varispeed

It is also envisioned that the AD1890 will be used in varispeed applications. The AD1890 and AD1891 SamplePorts are very useful for converting an input data stream with a variable sample rate (and therefore pitch characteristic) into an output data stream with a constant sample rate.

Options for Sample Rate Conversion over a Wider Range

There are systems which require sample rate conversion over a range which is wider than the 1:2 or 2:1 range provided by a single AD1890 or AD1891, such as for "scrubbing" in digital audio editors. There are at least two options in this situation. The first is to use a programmable DSP chip to perform simple integer ratio interpolation or decimation, and then use the AD1890/AD1891 when this intermediate output sample frequency is within the 1:2 or 2:1 range of the final desired output sample frequency. The second is to use multiple AD1890/AD1891 devices cascaded in series to achieve the required sample rate range.

"Almost Synchronous" Operation

It is possible to apply input and output sample frequencies which are very close (within a few Hz) or in fact synchronous ($L\overline{R}$_I and $L\overline{R}$_O tied together). There is no performance penalty when using the AD1890/AD1891 in "almost synchronous" applications. Indeed, there is a very slight performance benefit when the input and output sample clocks are synchronous since the alias distortion components which arise from the non-infinite stopband attenuation of the FIR filter will pile up exactly on top of the sinusoidal frequency components of the input signal, and will thus be masked.

System Mute

The mute function applies to both right and left channels on the AD1890/AD1891. The user can include a system specific output mute signal, while retaining the automatic mute feature of the AD1890/AD1891 by using the circuit shown in Figure 13.

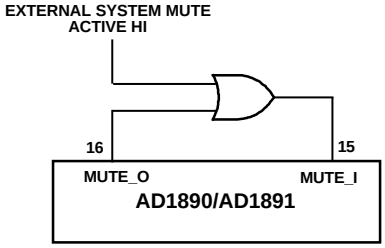

Figure 13. External Mute Circuit

Performance Graphs

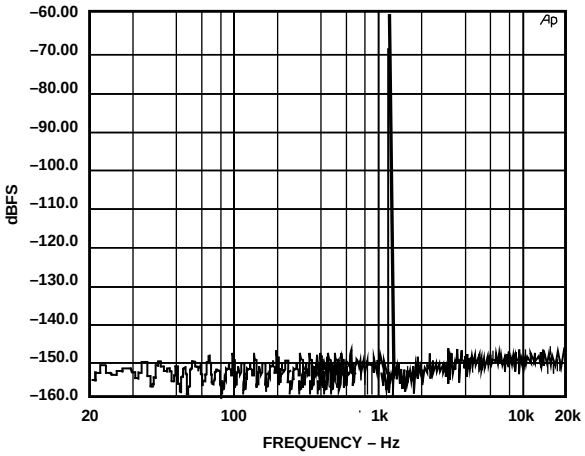

Figure 14a. AD1890—Dynamic Range from 20 Hz to 20 kHz, –60 dBFS, 48 kHz Input Sample Frequency, 44.1 kHz Output Sample Frequency, 16k-Point FFT, BH4 Window

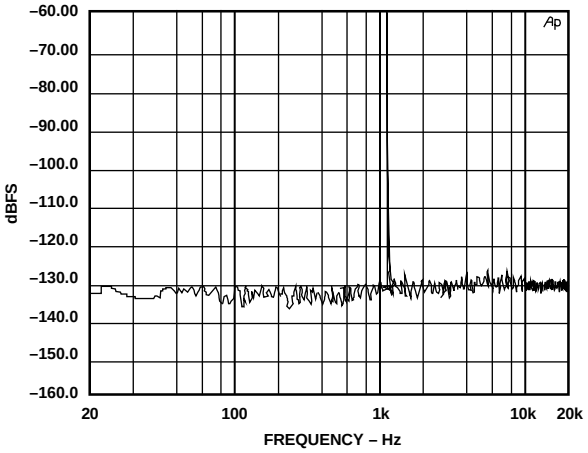

Figure 14b. AD1891—Dynamic Range from 20 Hz to 20 kHz, –60 dBFS, 48 kHz Input Sample Frequency, 44.1 kHz Output Sample Frequency, 16k-Point FFT, BH4 Window

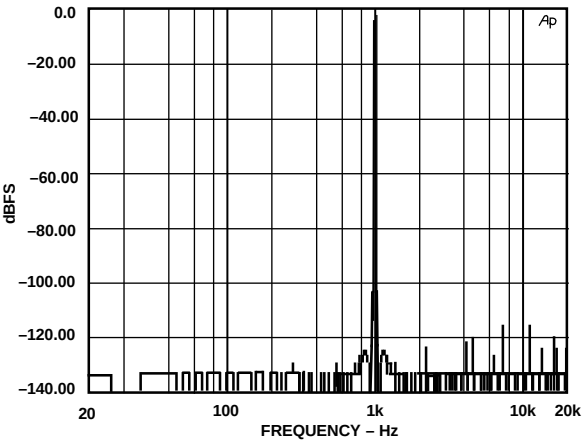

Figure 15a. AD1890—1 kHz Tone at 0 dBFS, 48 kHz Input Sample Frequency, 44.1 kHz Output Sample Frequency, 16k-Point FFT, BH4 Window

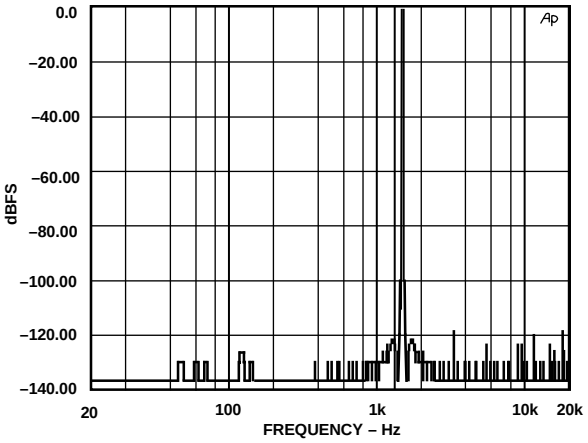

Figure 15b. AD1891—1 kHz Tone at 0 dBFS, 48 kHz Input Sample Frequency, 44.1 kHz Output Sample Frequency, 16k-Point FFT, BH4 Window

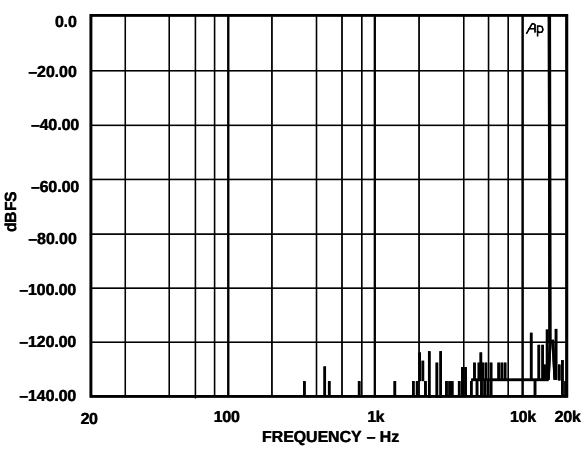

Figure 16a. AD1890—15 kHz Tone at 0 dBFS, 48 kHz Input Sample Frequency, 44.1 kHz Output Sample Frequency, 16k-Point FFT, BH4 Window

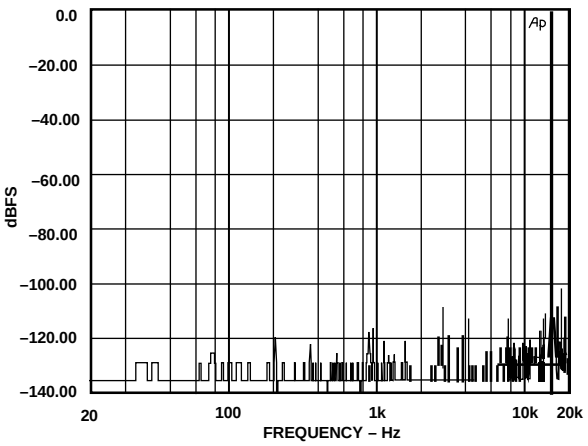

Figure 16b. AD1891—15 kHz Tone at 0 dBFS, 48 kHz Input Sample Frequency, 44.1 kHz Output Sample Frequency, 16k-Point FFT, BH4 Window

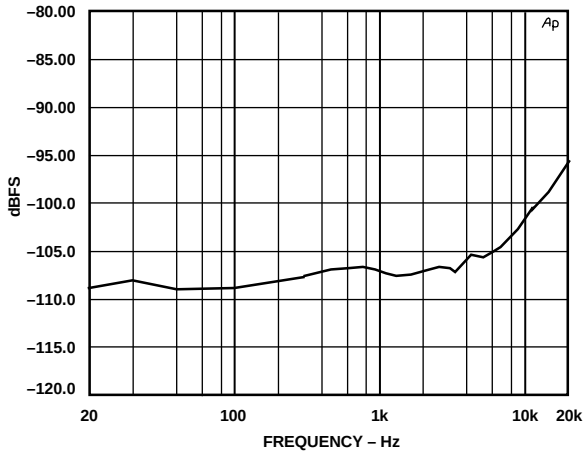

Figure 17a. AD1890—THD+N vs. Frequency, 48 kHz Input Sample Frequency, 44.1 kHz Output Sample Frequency, Full-Scale Input Signal

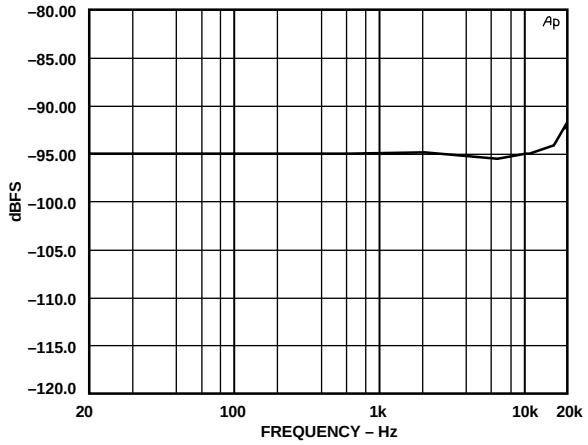

Figure 17b. AD1891—THD+N vs. Frequency, 48 kHz Input Sample Frequency, 44.1 kHz Output Sample Frequency, Full-Scale Input Signal

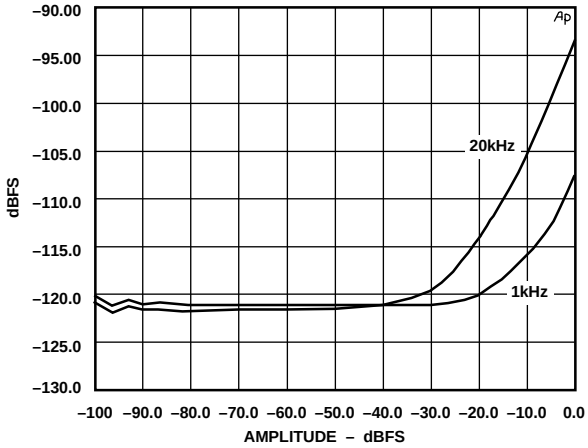

Figure 18a. AD1890—THD+N vs. Input Amplitude, 44.1 kHz Input Sample Frequency, 48 kHz Output Sample Frequency, 1 kHz and 20 kHz Tones

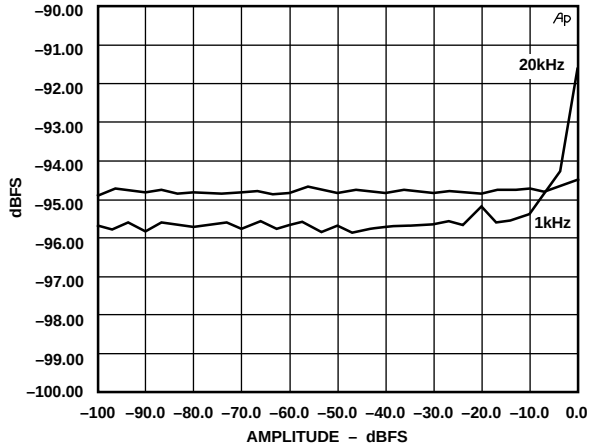

Figure 18b. AD1891—THD+N vs. Input Amplitude, 44.1 kHz Input Sample Frequency, 48 kHz Output Sample Frequency, 1 kHz and 20 kHz Tones

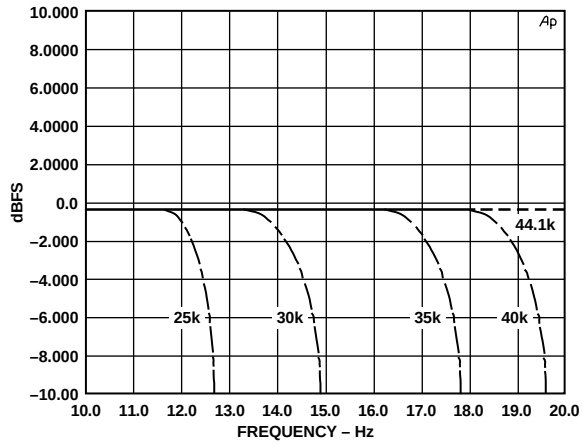

Figure 19. AD1890/AD1891 Digital Filter Signal Transfer Function, 10 kHz to 20 kHz, 44.1 kHz Input Sample Frequency, 44.1, 40, 35, 30 and 25 kHz Output Sample Frequencies

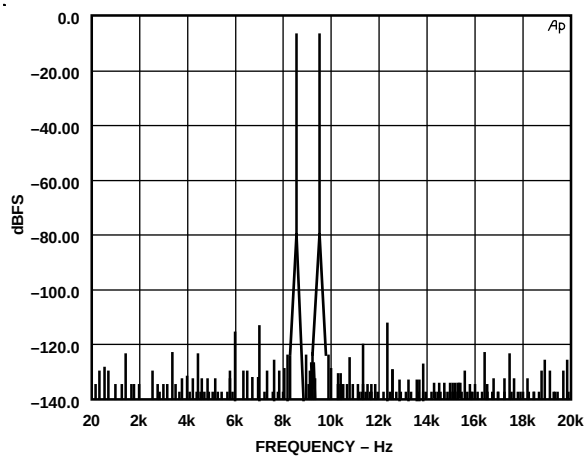

Figure 20a. AD1890—Twintone, 10 kHz and 11 kHz, 44.1 kHz Input Sample Frequency, 48 kHz Output Sample Frequency, 16k-Point FFT, BH4 Window

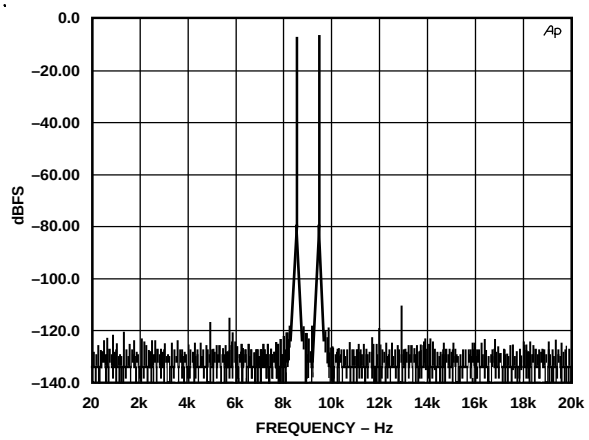

Figure 20b. AD1891—Twintone, 10 kHz and 11 kHz, 44.1 kHz Input Sample Frequency, 48 kHz Output Sample Frequency, 16k-Point FFT, BH4 Window

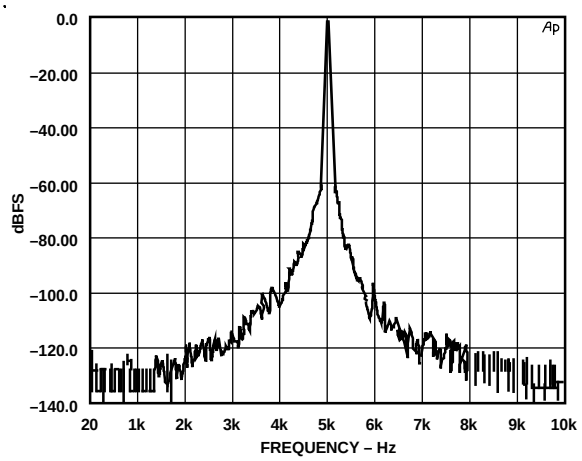

Figure 21. AD1890/AD1891—5 kHz Tone at 0 dBFS with 100 ns p-p Binomial Jitter on L/$\overline{R}$ Clocks, Fast Settling Mode, 48 kHz Input Sample Frequency, 44.1 kHz Output Sample Frequency, 16k-Point FFT, BH4 Window

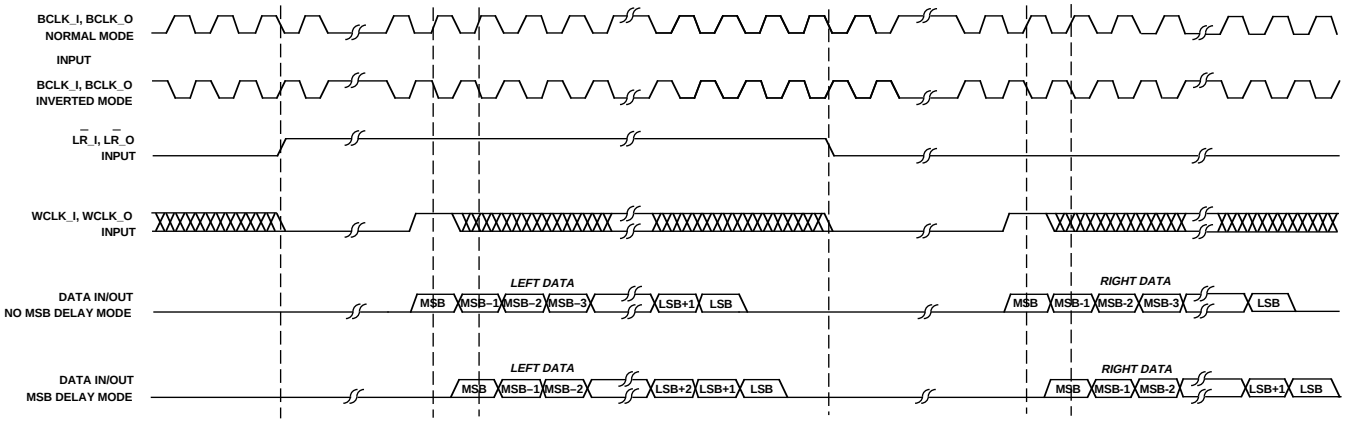

Figure 22. AD1890/AD1891 Serial Data Input and Output Timing, Word Clock Triggered Mode

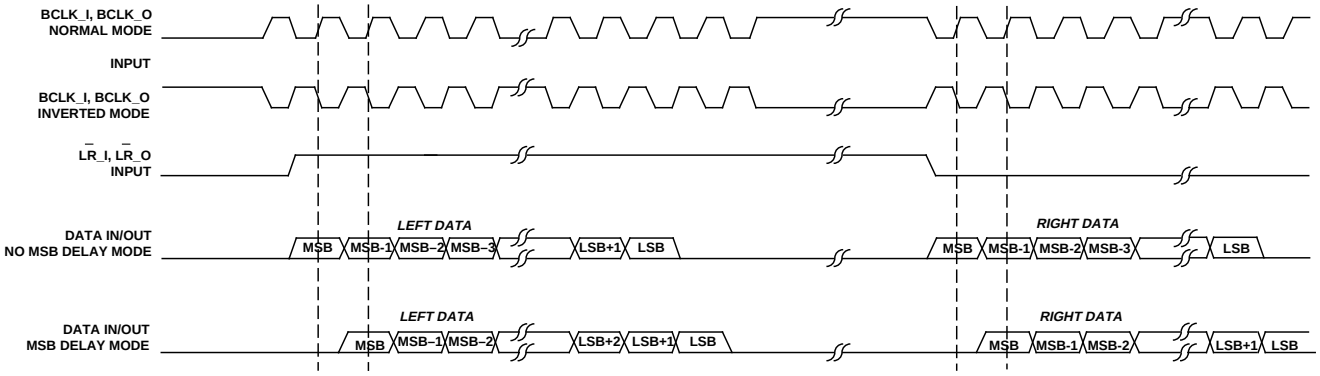

Figure 23. AD1890/AD1891 Serial Data Input and Output Timing, Left/Right Clock Triggered Mode

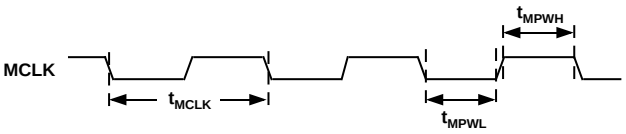

Figure 24. AD1890/AD1891 MCLK Timing

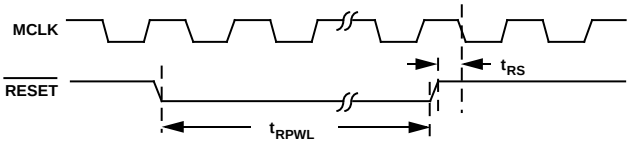

Figure 25. AD1890/AD1891 Reset Timing

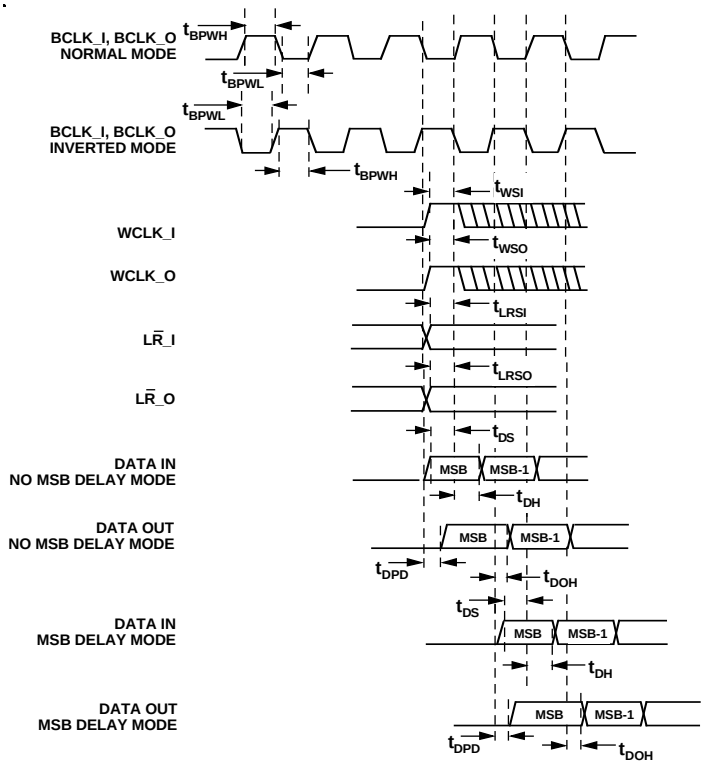

Figure 26. AD1890/AD1891 Bit Clock, Word Clock, Left/Right Clock and Data Timing

OUTLINE DIMENSIONS

Dimensions shown in inches and (mm).

N-28
28-Lead Plastic DIP

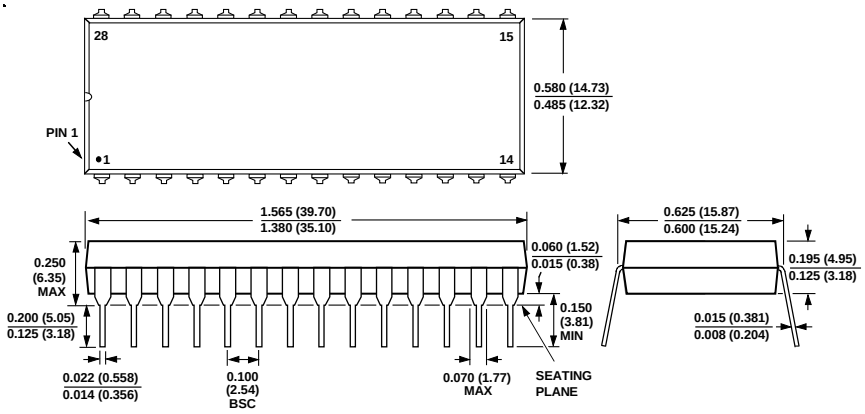

P-28A
28-Lead PLCC

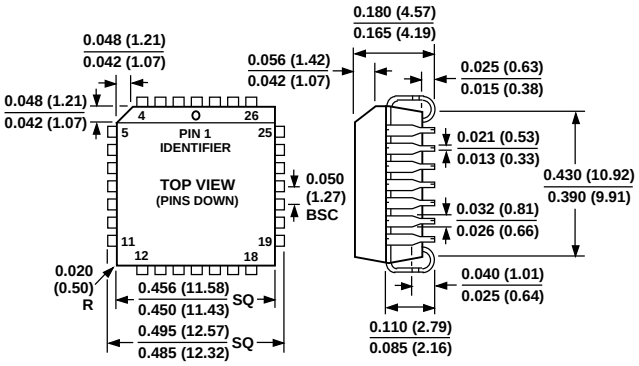

C1820–18–7/93

PRINTED IN U.S.A.

НИОКР СИСТЕМС

ООО «НИОКРсистемс» - это оперативные поставки широкого спектра электронных компонентов отечественного и импортного производства напрямую от производителей и с крупнейших мировых складов. Реализуемая нашей компанией продукция насчитывает более полумиллиона наименований.

Благодаря этому наша компания предлагает к поставке практически не ограниченный ассортимент компонентов как оптовыми, мелкооптовыми партиями, так и в розницу.

Благодаря развитой сети поставщиков, помогаем в поиске и приобретении экзотичных или снятых с производства компонентов.

Наша компания это:

- Гарантия качества поставляемой продукции
- Широкий ассортимент
- Минимальные сроки поставок
- Техническая поддержка
- Подбор комплектации
- Индивидуальный подход
- Гибкое ценообразование
- Работаем по 275 ФЗ

ООО «НИОКР СИТЕМС»
Москва, 125362, Россия, ул. Вишневая, д. 9, к. 1, Блок 104 а и 104 в

Телефон: 8 (495) 268-14-82
Email: n@nsistems.ru

ИНН: 7735154786
ОГРН: 1167746717709