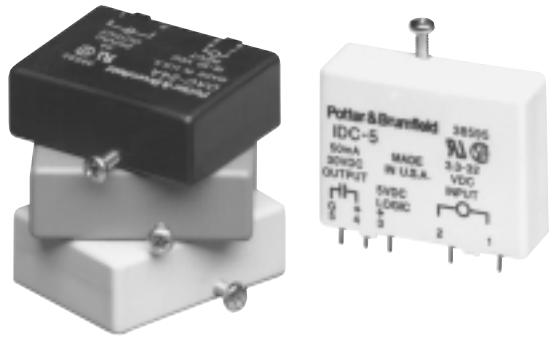

IAC/OAC IDC/ODC

Input/Output Modules

File E81606 & E29244
File LR38595M77

Users should thoroughly review the technical data before selecting a product part number. It is recommended that users also seek out the pertinent approvals files of the agencies/laboratories and review them to ensure the product meets the requirements for a given application.

Features

- Industry standard package and pin-out.
- Color coded by function.
- 4,000V rms optical isolation.
- High immunity to false operation.
- Series compatible.
- Output modules can be controlled from sinking or sourcing logic.
- Compatible with 2IO series mounting boards.

Engineering Data (all I/O modules)

Switch Form: 1 Form A (SPST-NO)
Duty: Continuous.
Isolation: 4,000V rms, 60 Hz.
Capacitance: 8 pF Typical (input to output).
Operating Temperature: –30°C to +80°C.
Storage Temperature: –40°C to +85°C.
Potting Compound Flammability: UL94V-0.
Approximate Weight: 1.38 oz. (35g).

Ordering Information

Typical Part Number ▶	OAC	-5	H

1. Basic Series:
IAC = AC input module - yellow case
IDC = DC input module - white case
OAC = AC output module - black case
ODC = DC output module - red case

2. Input or Logic Voltage:
5 = 5VDC
15 = 15VDC
24 = 24VDC

3. Options:

Blank =	IAC Type	—	120VAC/VDC input (90-140VAC/VDC) * *
	IDC Type	—	3.3-32VDC input * *
	OAC Type	—	3A, 24-280VAC, zero voltage turn-on output
	ODC Type	—	3A, 3-60VDC output
A =	IAC Type	—	240VAC/VDC input (180-280VAC/VDC) * *
	OAC Type	—	3A, 24-280VAC, zero voltage turn-on output
	ODC Type	—	1A, 3-250VDC output
	IDC Type	—	10-60VDC input * *
E =	IAC Type	—	18-36VAC/VDC input * *
F =	IDC Type	—	4-32VDC input & fast turn-on & turn-off times * *
H =	OAC Type	—	5A, 24-280VAC, zero voltage turn-on output
R =	OAC Type	—	5A, 12-280VAC, random voltage turn-on output

* * Is not polarity sensitive.

Our authorized distributors are more likely to maintain the following items in stock for immediate delivery.

IAC-5	IDC-24	OAC-24A
IAC-5A	OAC-5	ODC-5
IAC-5E	OAC-5A	ODC-5A
IAC-15	OAC-5H	ODC-15
IAC-24	OAC-15	ODC-15A
IDC-5	OAC-24	ODC-24

Dimensions are shown for reference purposes only.
Dimensions are in inches over (millimeters) unless otherwise specified.
Specifications and availability subject to change.

IAC
AC Input Modules

Input Specifications

Parameter	Conditions	Units	IAC-5 IAC-15 IAC-24			IAC-5A IAC-15A IAC-24A			IAC-5E IAC-15E IAC-24E		
			Min.	Typ.	Max.	Min.	Typ.	Max.	Min.	Typ.	Max.
Control Voltage Range V_{IN}		VAC/VDC	90	120	140	180	240	280	18	24	36
Must Operate Voltage $V_{IN(OP)}$		VAC/VDC			90			180			18
Must Release Voltage $V_{IN(REL)}$		VAC/VDC	20			20			3		
Max. Input Current	@V_{IN}=Max.	mA			6			6			18
Input Resistance		Ohms		28K			75K			2K	

Output Specifications (@ +25˚C unless otherwise specified)

Parameter	Conditions	Units	IAC-5 IAC-5A IAC-5E			IAC-15 IAC-15A IAC-15E			IAC-24 IAC-24A IAC-24E		
			Min.	Typ.	Max.	Min.	Typ.	Max.	Min.	Typ.	Max.
Maximum Output Voltage		VDC			30			30			30
Maximum Output Current		mADC			50			50			50
Maximum Output Leakage Current	V_{OUT}=Max.	µADC			10			10			10
Maximum Output Voltage Drop	I_{SINK}=50mA	VDC			.2			.2			.2
Logic Supply Voltage V_{CC}		VDC	3	5	6	12	15	18	20	24	30
Logic Supply Current	V_{CC}=Max.	mADC			18			18			18
Turn-On Time (Nominal)	I_{SINK}=25mA	ms			20			20			20
Turn-Off Time (Nominal)	I_{SINK}=25mA	ms			30			30			30
Output Type (Open Collector)			Normally Open(SINKING)			Normally Open(SINKING)			Normally Open(SINKING)		

OAC
AC Output Modules

Input Specifications

Parameter	Conditions	Units	OAC-5 OAC-5A OAC-5H OAC-5R			OAC-15 OAC-15A OAC-15H OAC-15R			OAC-24 OAC-24A OAC-24H OAC-24R		
			Min.	Typ.	Max.	Min.	Typ.	Max.	Min.	Typ.	Max.
Control Voltage Range V_{IN}		VDC	3	5	8	9	15	18	18	24	32
Must Operate Voltage $V_{IN(OP)}$		VDC			3			9			18
Must Release Voltage $V_{IN(REL)}$		VDC	1			1			1		
Maximum Input Current	@V_{IN}=Nominal	mADC			20			16			13
Input Resistance R_{IN}		Ohms		220			1000			2000	

PIN-3 must be positive with respect to PIN-4 for correct operation.

Output Specifications (47 to 63 Hz.,@ +25˚C unless otherwise specified)

Parameter	Conditions	Units	OAC-5 OAC-5A OAC-15 OAC-15A OAC-24 OAC-24A			OAC-5H IAC-15H OAC-24H			OAC-5R OAC-15R OAC-24R		
			Min.	Typ.	Max.	Min.	Typ.	Max.	Min.	Typ.	Max.
Load Voltage V_L		V rms	24	120/240	280	24	120/240	280	24	120/240	280
Repetitive Blocking Voltage		V peak			±600			±600			±600
Load Current I_L*		A rms	.05		3	.05		5	.05		5
Ouput Current		mA/°C		58mA/°C			66mA/°C			66mA/°C	
Derating				40°C - 80°C			30°C - 80°C			30°C - 80°C	
Single Cycle surge Current		A peak			100			250			250
Leakage Current (Off-State)	V_L=120VAC	mA rms			1			1			1
@ 60 Hz.	V_L=240VAC	mA rms			2			2			2
On-State Voltage Drop	I_L=Max.	V peak			1.6			1.6			1.6
Static dv.dt (Off-State)		V/µs			200			200			200
Turn-On Time	@f=60 Hz.	ms			8.3			8.3			.1
Turn-Off Time		ms			8.3			8.3			8.3
Output Type (Form)				Normally Open 1A			Normally Open 1A			Normally Open 1A	
H/P/ Rating @ 240VAC				1/4HP			1/2HP			1/2HP	

IDC
DC Input Modules

Input Specifications

Parameter	Conditions	Units	IDC-5 IDC-15 IDC-24			IDC-5A IDC-15A IDC-24A			IDC-5F IDC-15F IDC-24F		
			Min.	Typ.	Max.	Min.	Typ.	Max.	Min.	Typ.	Max.
Control Voltage Range V_{IN}		VDC	±3.3	±24	±32	±10		±60	±4		±32
Must Operate Voltage $V_{IN(OP)}$		VDC			±3.3			±10			±4
Must Release Voltage $V_{IN(REL)}$		VDC	±2			±3			±1		
Maximum Input Current	@ V_{IN}=Max.	mA		34			34			68	
Input Resistance		Ohms		1K			2K			500	

Output Specifications (@ +25˚C unless otherwise specified)

Parameter	Conditions	Units	IDC-5 IDC-5A			IDC-15 IDC-15A			IDC-24 IDC-24A			IDC-5F			IDC-15F			IDC-24F		
			Min	Typ	Max	Min	Typ	Max	Min	Typ	Max	Min	Typ	Max	Min	Typ	Max	Min	Typ	Max
Maximum Output Voltage		VDC			30			30			30			30			30			30
Maximum Output Current		mADC			50			50			50			50			50			50
Maximum Output Leakage Current	V_{OUT}=Max.	µADC			10			10			10			10			10			10
Maximum Output Voltage Drop	I_{SINK}=50mA	VDC			.2			.2			.2			.2			.2			.2
Logic Supply Voltage V_{CC}		VDC	3	5	6	12	15	18	20	24	30	3	5	6	12	15	18	20	24	30
Logic Supply Current	V_{CC}=Max.	mADC			18			18			18			18			18			18
Turn-On Time (Nominal)	I_{SINK}=25mA	ms		1*			1*			1*			.05			.05			.05	
Turn-Off Time (Nominal)	I_{SINK}=25mA	ms		1*			1*			1*			.10			.10			.10	
Output Type (Open Collector)			Normally Open (SINKING)			Normally Open (SINKING)			Normally Open (SINKING)			Normally Open (SINKING)			Normally Open (SINKING)			Normally Open (SINKING)		

* Nominal Turn-On and Turn-Off times for IDC5A, IDC15A & IDC24A are 5 ms.

ODC
DC Output Modules

Input Specifications

Parameter	Conditions	Units	ODC-5 ODC-5A			ODC-15 ODC-15A			ODC-24 ODC-24A		
			Min.	Typ.	Max.	Min.	Typ.	Max.	Min.	Typ.	Max.
Control Voltage Range V_{IN}		VDC	3	5	8	9	15	18	18	24	32
Must Operate Voltage $V_{IN(OP)}$		VDC			3			9			18
Must Release Voltage $V_{IN(REL)}$		VDC	1			1			1		
Maximum Input Current	@ V_{IN}=Nominal	mADC			18			16			13
Input Resistance R_{IN}		Ohms		250			1000			2000	

PIN-3 must be positive with respect to PIN-4 for correct operation.

Output Specifications (@ +25˚C unless otherwise specified)

Parameter	Conditions	Units	ODC-5 ODC-24 ODC-15			ODC-5A ODC-24A ODC-15A		
			Min.	Typ.	Max.	Min.	Typ.	Max.
Load Voltage V_L		VDC	3		60	3		250
Load Current I_L		ADC	.01		3	.01		1
Maximum Surge Current for 1 Second		ADC			5			5
Maximum Leakage Current (Off-State)	V_L=MAX	µADC			500			2000
Maximum On-State Voltage Drop	I_L=MAX	VDC			1.5			1.5
MaximumTurn-On Time		ms			.1			.1
MaximumTurn-Off Time		ms			.75			.75

At 40°C, derate by 50mA/°Cto 80°C.
PIN-1 must be positive with respect to PIN-2 for correct operation.

Dimensions are shown for reference purposes only.
Dimensions are in inches over (millimeters) unless otherwise specified.
Specifications and availability subject to change.

IAC Operating Diagram

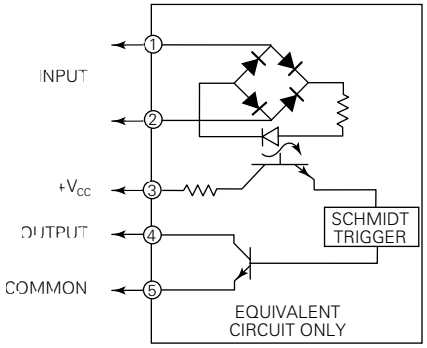

OAC Operating Diagram

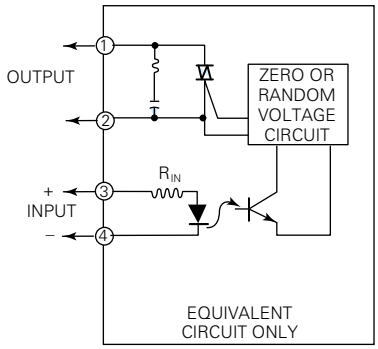

IDC Operating Diagram

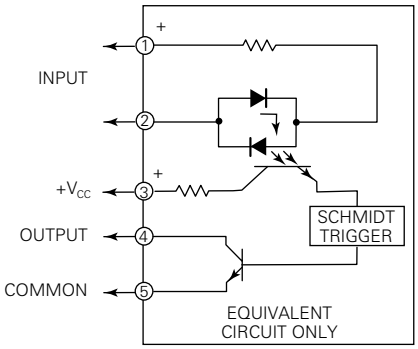

ODC Operating Diagram

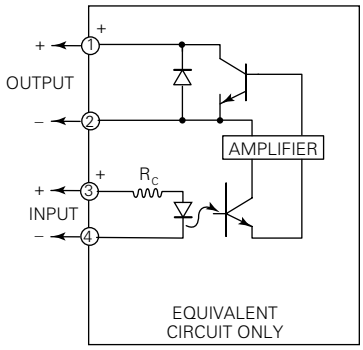

Outline Dimensions

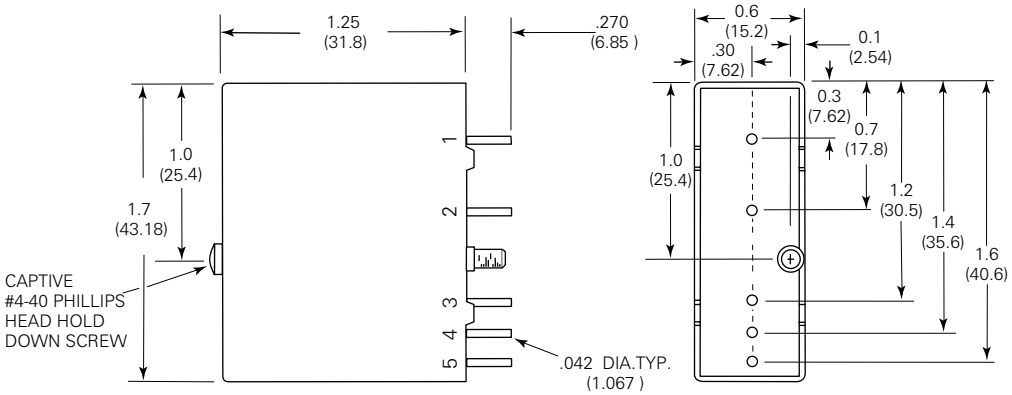

Note: Pin 5 is not present on Output Modules.

НИОКР СИСТЕМС

ООО «НИОКРсистемс» - это оперативные поставки широкого спектра электронных компонентов отечественного и импортного производства напрямую от производителей и с крупнейших мировых складов. Реализуемая нашей компанией продукция насчитывает более полумиллиона наименований.

Благодаря этому наша компания предлагает к поставке практически не ограниченный ассортимент компонентов как оптовыми, мелкооптовыми партиями, так и в розницу.

Благодаря развитой сети поставщиков, помогаем в поиске и приобретении экзотичных или снятых с производства компонентов.

Наша компания это:

- Гарантия качества поставляемой продукции
- Широкий ассортимент
- Минимальные сроки поставок
- Техническая поддержка
- Подбор комплектации
- Индивидуальный подход
- Гибкое ценообразование
- Работаем по 275 ФЗ

ООО «НИОКР СИТЕМС»
Москва, 125362, Россия, ул. Вишневая, д. 9, к. 1, Блок 104 а и 104 в

Телефон: 8 (495) 268-14-82
Email: n@nsistems.ru

ИНН: 7735154786
ОГРН: 1167746717709