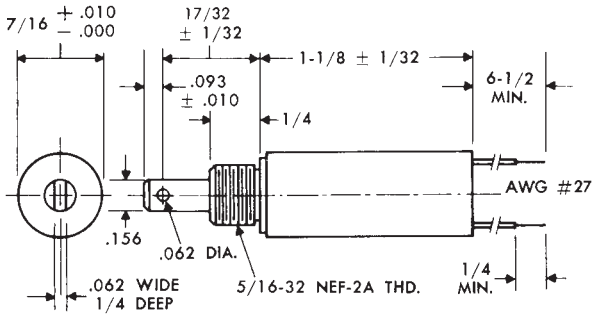

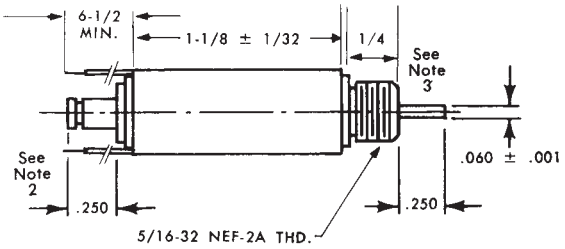

Notes:
1. Solenoid shown in energized position.
2. .250 Plunger configuration shown supplied for spring return only.
3. Largest size thread that may be threaded on push rod #0.
4. Push force approximately 90% of pull forces shown.

Type C7-18

Specifications	
Size	7/16″ Diameter x 1⅛″ Long (From Mounting Surface)
Weight	½ Oz. Max.
Mounting	5/16-32 Threaded Bushing (Nut and Lockwasher Supplied)
Dielectric Strength	500 VRMS
Insulation Material	Class "A" (105° C)
Life Expectancy	10 Million Cycles at Rated Load
Nominal Coil Power	Continuous Duty—2 Watts Intermittent Duty (10%)—10 Watts (One Minute Max. on Time)

Standard Coils		
Nominal Volts (D.C.)	**Resistance (OHMS ± 10%) at 25°C**	
	Continuous Duty	**Intermittent Duty**
6	18	3.6
12	72	14.4
24	288	58.0
110	6613	1323.0
Other Coils and Duty Cycles Available Upon Request		

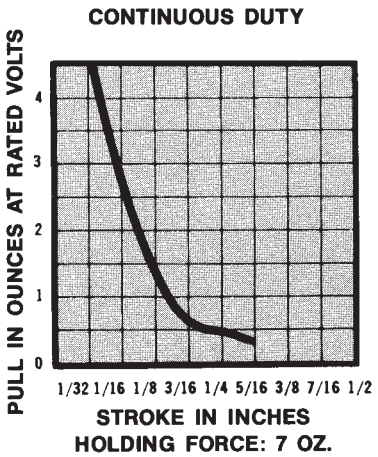

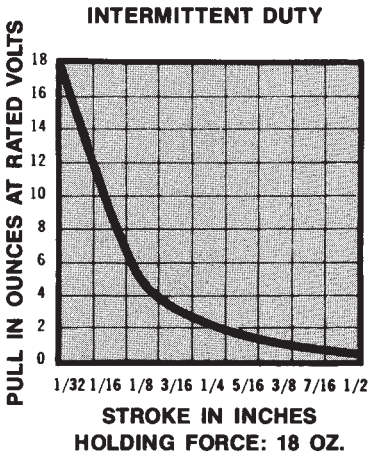

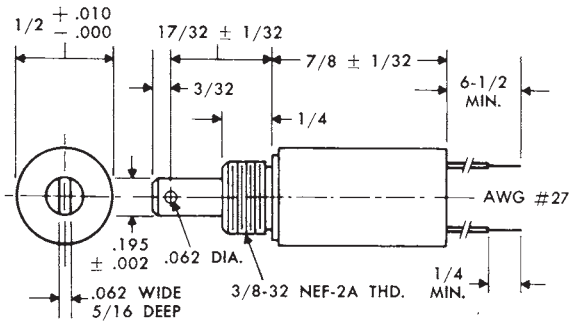

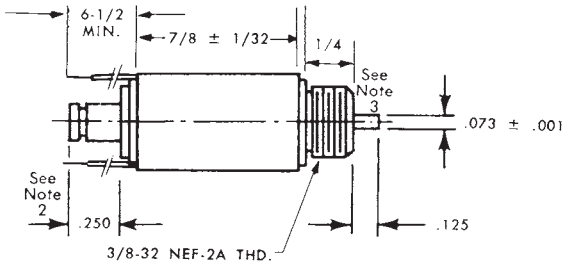

Notes:
1. Solenoid shown in energized position.
2. .250 Plunger configuration shown supplied for spring return only.
3. Largest size thread that may be threaded on push rod #1.
4. Push force approximately 90% of pull forces shown.

Type C8-14

Specifications	
Size	½" Diameter x ⅞" Long (From Mounting Surface)
Weight	1 Oz. Max.
Mounting	⅜-32 Threaded Bushing (Nut and Lockwasher Supplied)
Dielectric Strength	500 VRMS
Insulation Material	Class "A" (105° C)
Life Expectancy	10 Million Cycles at Rated Load
Nominal Coil Power	Continuous Duty—2.4 Watts Intermittent Duty (10%)—7 Watts (One Minute Max. on Time)

Standard Coils		
Nominal Volts (D.C.)	**Resistance (OHMS ± 10%) at 25°C**	
	Continuous Duty	**Intermittent Duty**
6	15	5.0
12	60	20.6
24	240	82.0
110	5510	1890.0
Other Coils and Duty Cycles Available Upon Request		

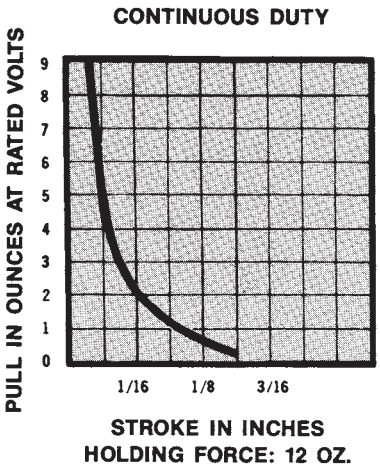

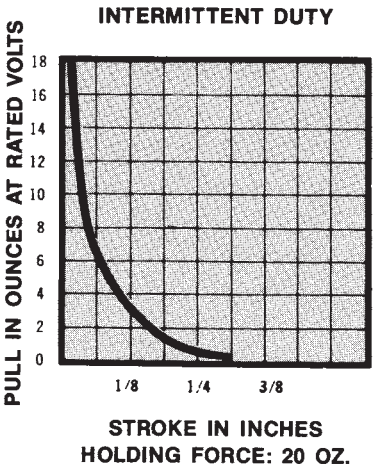

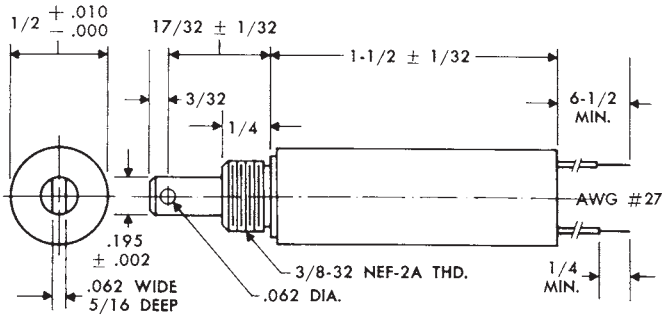

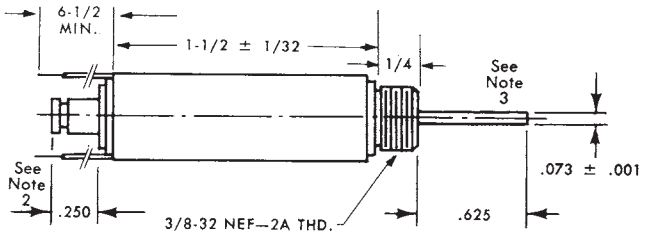

Notes:
1. Solenoid shown in energized position.
2. .250 Plunger configuration shown supplied for spring return only.
3. Largest size thread that may be threaded on push rod #1.
4. Push force approximately 90% of pull forces shown.

Type C8-24

Specifications	
Size	½" Diameter x 1½" Long (From Mounting Surface)
Weight	1½ Oz. Max.
Mounting	⅜-32 Threaded Bushing (Nut and Lockwasher Supplied)
Dielectric Strength	500 VRMS
Insulation Material	Class "A" (105° C)
Life Expectancy	10 Million Cycles at Rated Load
Nominal Coil Power	Continuous Duty—3.5 Watts Intermittent Duty (10%)—15 Watts (One Minute Max. on Time)

Standard Coils		
Nominal Volts (D.C.)	**Resistance (OHMS ± 10%) at 25°C**	
	Continuous Duty	**Intermittent Duty**
6	10.3	2.4
12	41.0	9.6
24	165.0	38.5
110	3780.0	882.0
Other Coils and Duty Cycles Available Upon Request		

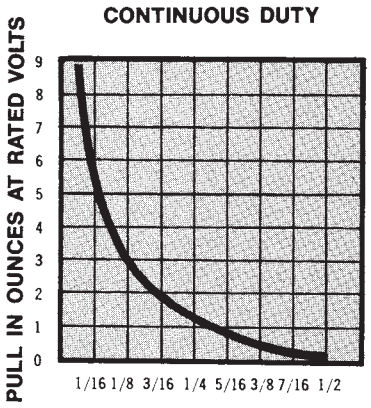

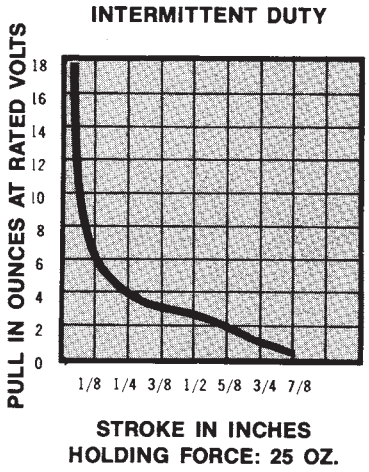

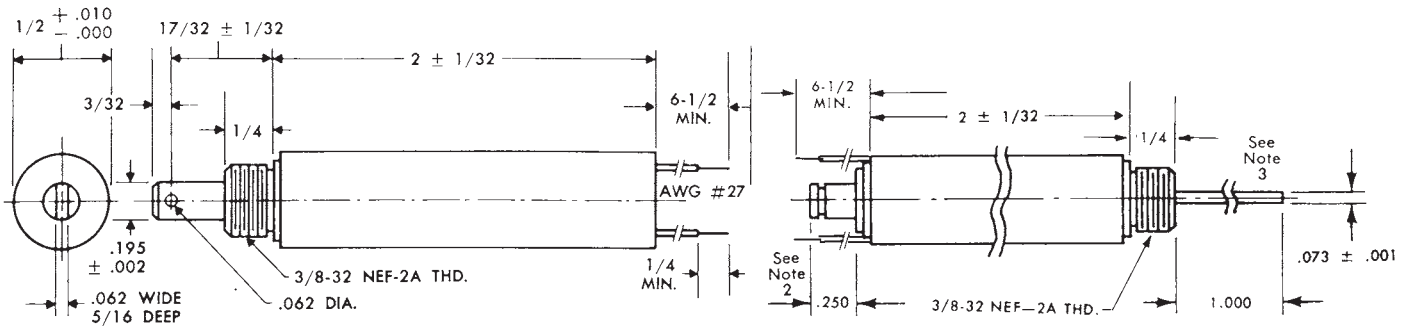

Notes:
1. Solenoid shown in energized position.
2. .250 Plunger configuration shown supplied for spring return only.
3. Largest size thread that may be threaded on push rod #1.
4. Push force approximately 90% of pull forces shown.

Type C8-32

Specifications	
Size	½" Diameter x 2" Long (From Mounting Surface)
Weight	2 Oz. Max.
Mounting	⅜-32 Threaded Bushing (Nut and Lockwasher Supplied)
Dielectric Strength	500 VRMS
Insulation Material	Class "A" (105° C)
Life Expectancy	10 Million Cycles at Rated Load
Nominal Coil Power	Continuous Duty—4 Watts Intermittent Duty (10%)—20 Watts (One Minute Max. on Time)

Standard Coils		
Nominal Volts (D.C.)	**Resistance (OHMS ± 10%) at 25°C**	
	Continuous Duty	**Intermittent Duty**
6	9	1.8
12	36	7.2
24	145	29.0
110	3306	661.0
Other Coils and Duty Cycles Available Upon Request		

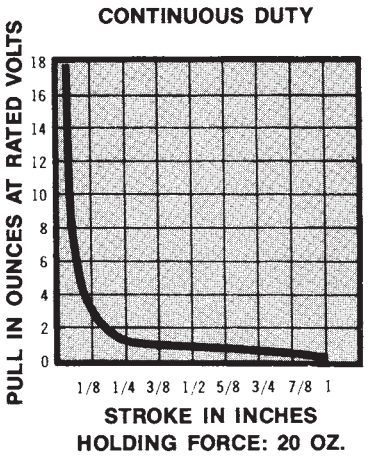

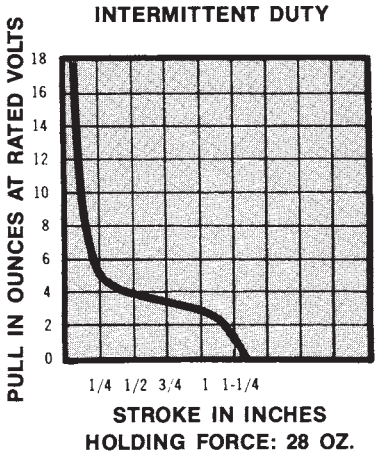

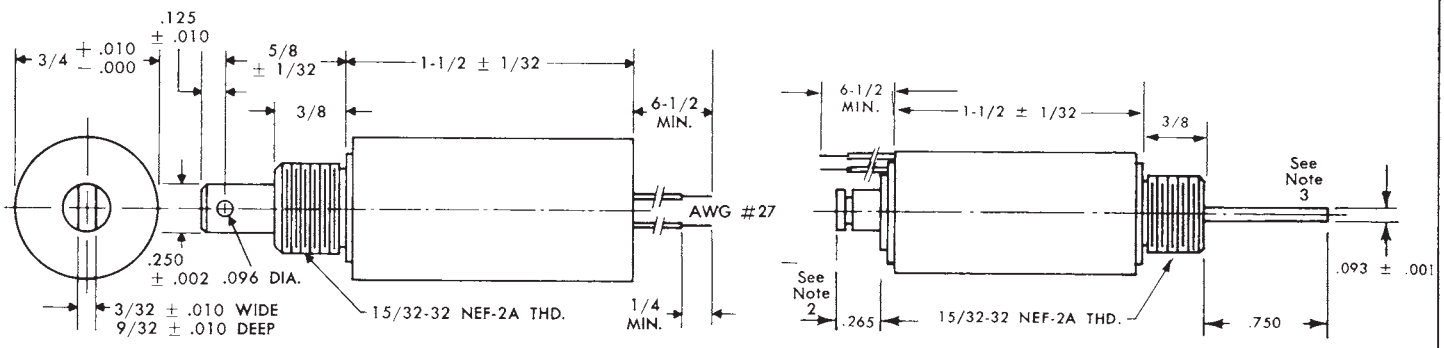

Notes:
1. Solenoid shown in energized position.
2. .265 Plunger configuration shown supplied for spring return only.
3. Largest size thread that may be threaded on push rod #3.
4. Push force approximately 90% of pull forces shown.

Type C12-24

Specifications	
Size	¾″ Diameter x 1½″ Long (From Mounting Surface)
Weight	3 Oz. Max.
Mounting	15/32-32 Threaded Bushing (Nut and Lockwasher Supplied)
Dielectric Strength	500 VRMS
Insulation Material	Class "A" (105° C)
Life Expectancy	10 Million Cycles at Rated Load
Nominal Coil Power	Continuous Duty—3.5 Watts Intermittent Duty (10%)—22 Watts (One Minute Max. on Time)

Standard Coils		
Nominal Volts (D.C.)	**Resistance (OHMS ± 10%) at 25°C**	
	Continuous Duty	**Intermittent Duty**
6	10.3	1.6
12	41.0	6.5
24	165.0	26.0
110	3780.0	600.0
Other Coils and Duty Cycles Available Upon Request		

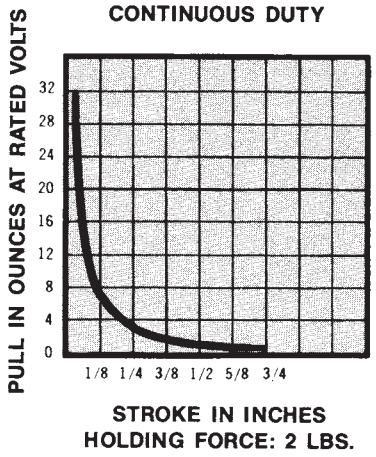

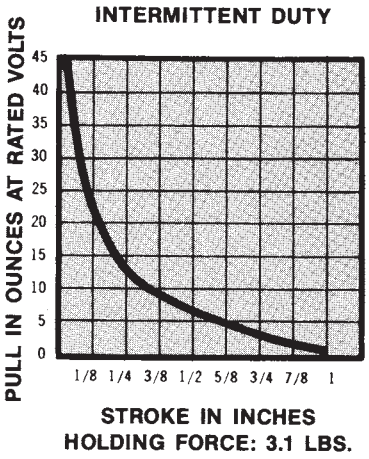

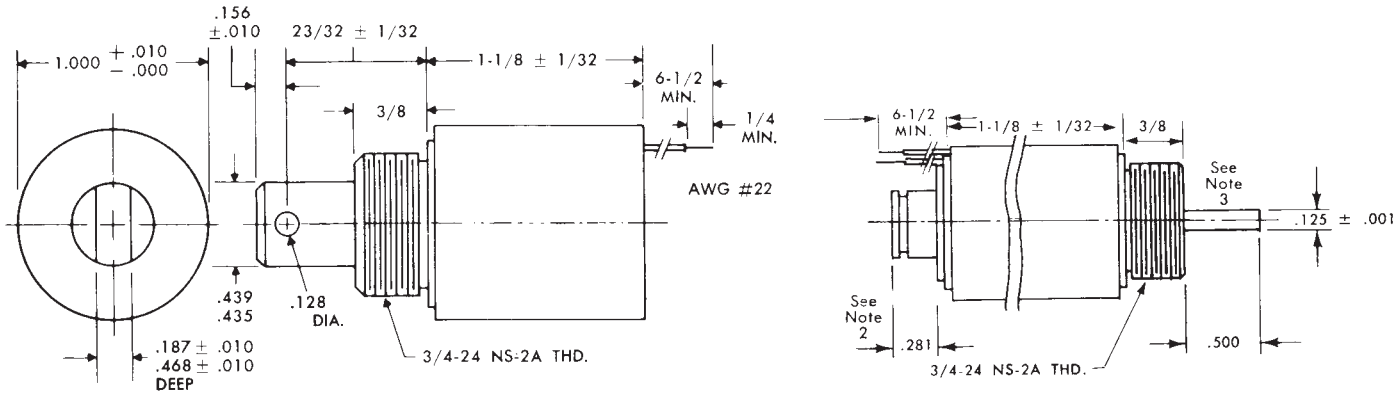

Notes:
1. Solenoid shown in energized position.
2. .281 Plunger configuration shown supplied for spring return only.
3. Largest size thread that may be threaded on push rod #5.
4. Push force approximately 90% of pull forces shown.

Type C16-18

Specifications	
Size	1″ Diameter x 1⅛″ Long (From Mounting Surface)
Weight	4 Oz. Max.
Mounting	¾-24 Threaded Bushing (Nut and Lockwasher Supplied)
Dielectric Strength	500 VRMS
Insulation Material	Class "A" (105° C)
Life Expectancy	10 Million Cycles at Rated Load
Nominal Coil Power	Continuous Duty—4 Watts Intermittent Duty (10%)—19 Watts (One Minute Max. on Time)

Standard Coils

Nominal Volts (D.C.)	Resistance (OHMS ± 10%) at 25°C	
	Continuous Duty	Intermittent Duty
6	9	1.9
12	36	7.6
24	144	30.0
110	3306	696.0

Other Coils and Duty Cycles Available Upon Request

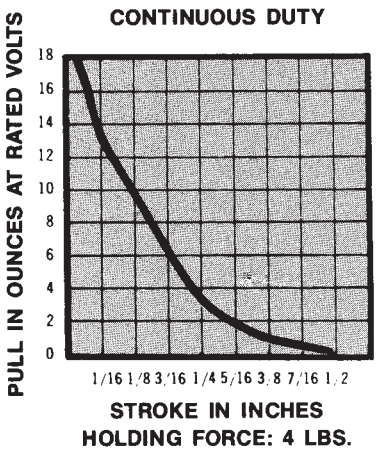

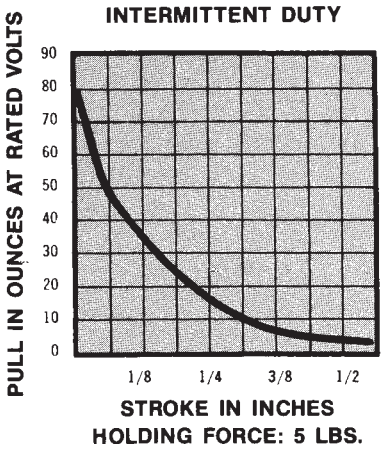

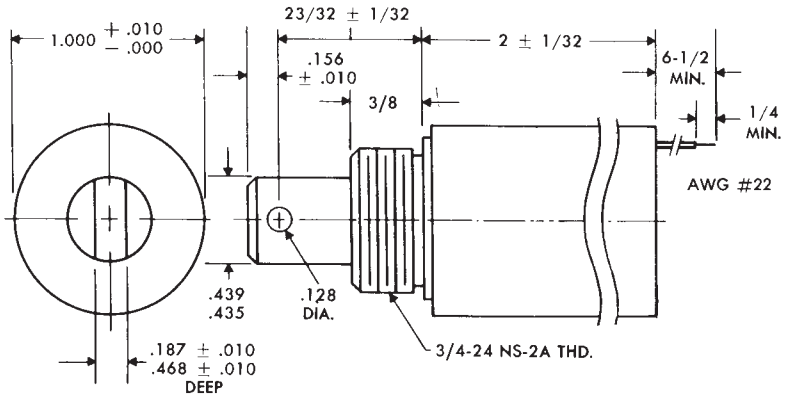

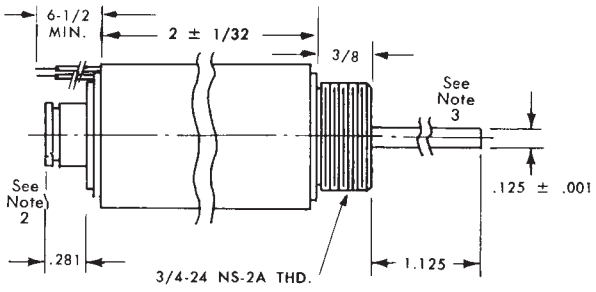

Notes:
1. Solenoid shown in energized position.
2. .281 Plunger configuration shown supplied for spring return only.
3. Largest size thread that may be threaded on push rod #5.
4. Push force approximately 90% of pull forces shown.

Type C16-32

Specifications	
Size	1″ Diameter x 2″ Long (From Mounting Surface)
Weight	5½ Oz. Max.
Mounting	¾-24 Threaded Bushing (Nut and Lockwasher Supplied)
Dielectric Strength	500 VRMS
Insulation Material	Class "A" (105° C)
Life Expectancy	10 Million Cycles at Rated Load
Nominal Coil Power	Continuous Duty—5.5 Watts Intermittent Duty (10%)—38 Watts (One Minute Max. on Time)

Standard Coils

Nominal Volts (D.C.)	Resistance (OHMS ± 10%) at 25°C	
	Continuous Duty	Intermittent Duty
6	6.5	.95
12	26.0	3.80
24	105.0	15.00
110	2405	348.0
Other Coils and Duty Cycles Available Upon Request		

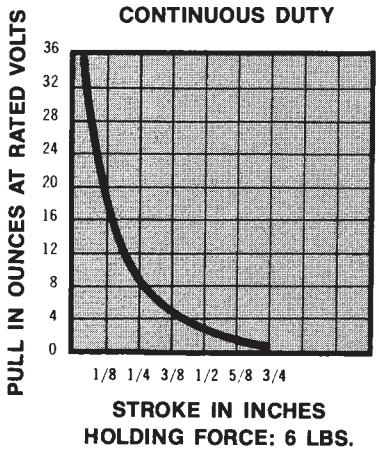

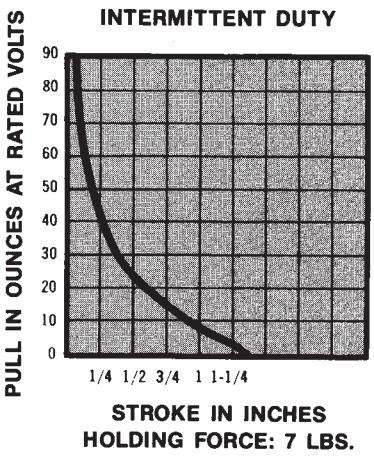

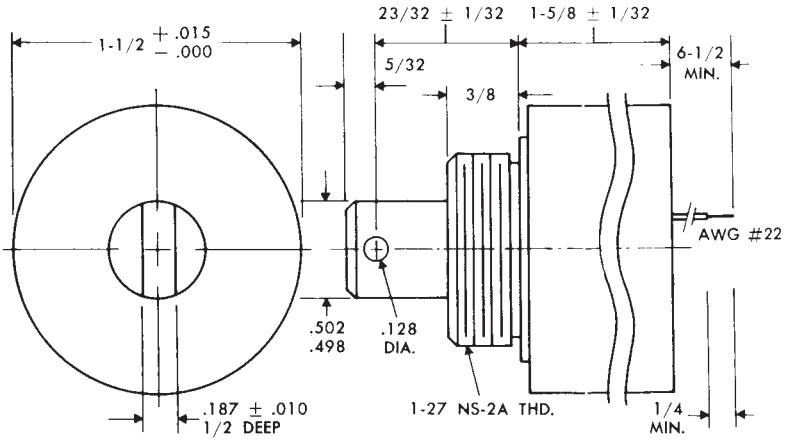

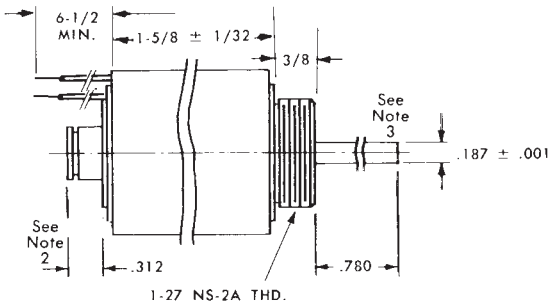

Notes:
1. Solenoid shown in energized position.
2. .312 Plunger configuration shown supplied for spring return only.
3. Largest size thread that may be threaded on push rod #10.
4. Push force approximately 90% of pull forces shown.

Type C24-26

Specifications	
Size	1½" Diameter x 1⅝" Long (From Mounting Surface)
Weight	10 Oz. Max.
Mounting	1-27 Threaded Bushing (Nut and Lockwasher Supplied)
Dielectric Strength	500 VRMS
Insulation Material	Class "A" (105° C)
Life Expectancy	10 Million Cycles at Rated Load
Nominal Coil Power	Continuous Duty—7 Watts Intermittent Duty (10%)—40 Watts (One Minute Max. on Time)

Standard Coils		
Nominal Volts (D.C.)	**Resistance (OHMS ± 10%) at 25°C**	
	Continuous Duty	**Intermittent Duty**
6	5.0	.9
12	20.6	3.6
24	82.0	14.0
110	1890.0	331.0
Other Coils and Duty Cycles Available Upon Request		

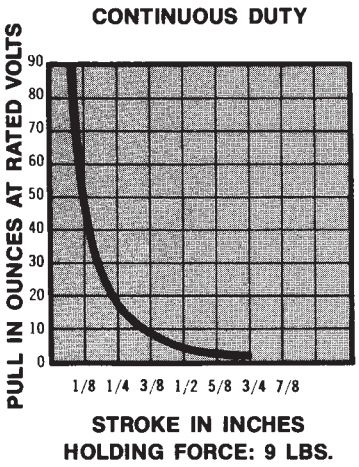

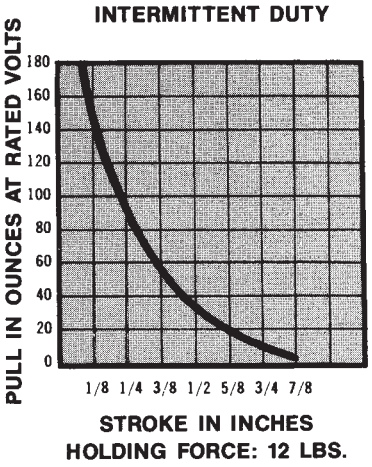

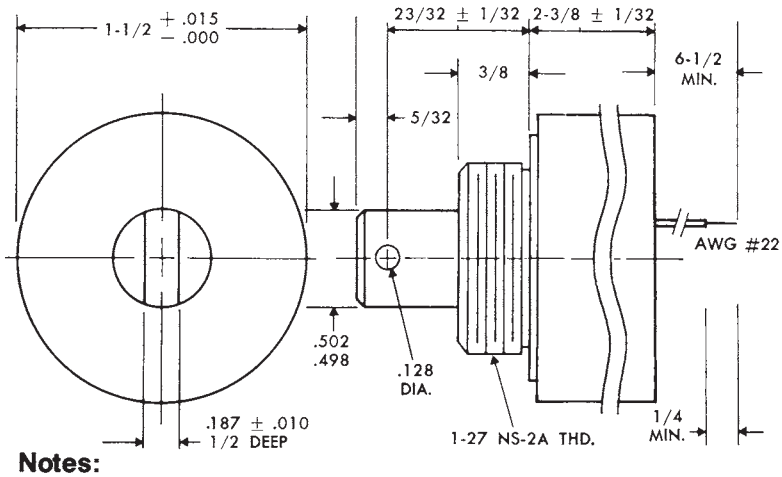

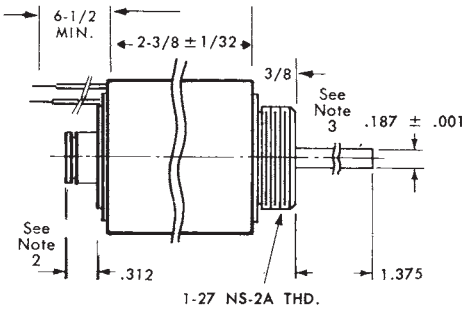

Notes:
1. Solenoid shown in energized position.
2. .312 Plunger configuration shown supplied for spring return only.
3. Largest size thread that may be threaded on push rod #10.
4. Push force approximately 90% of pull forces shown.

Type C24-38

Specifications	
Size	1½" Diameter x 2⅜" Long (From Mounting Surface)
Weight	18 Oz. Max.
Mounting	1-27 Threaded Bushing (Nut and Lockwasher Supplied)
Dielectric Strength	500 VRMS
Insulation Material	Class "A" (105° C)
Life Expectancy	10 Million Cycles at Rated Load
Nominal Coil Power	Continuous Duty—10 Watts Intermittent Duty (10%)—60 Watts (One Minute Max. on Time)

Standard Coils		
Nominal Volts (D.C.)	**Resistance (OHMS ± 10%) at 25°C**	
	Continuous Duty	**Intermittent Duty**
6	3.6	.6
12	14.5	2.4
24	58.0	9.6
110	1323.0	220.0
Other Coils and Duty Cycles Available Upon Request		

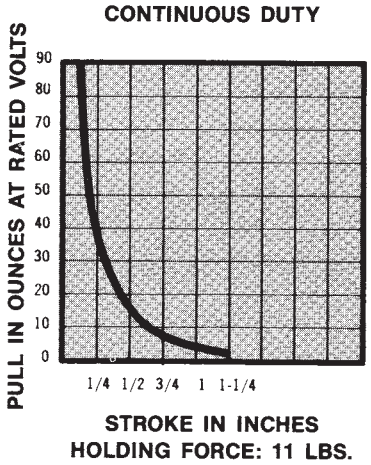

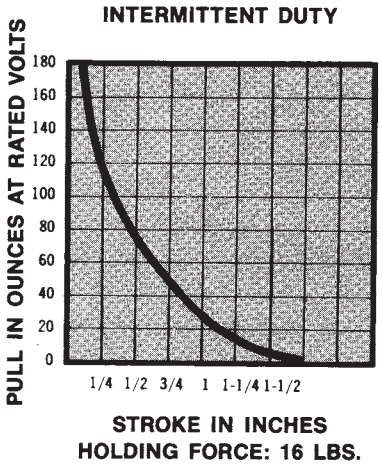

НИОКР СИСТЕМС

ООО «НИОКРсистемс» - это оперативные поставки широкого спектра электронных компонентов отечественного и импортного производства напрямую от производителей и с крупнейших мировых складов. Реализуемая нашей компанией продукция насчитывает более полумиллиона наименований.

Благодаря этому наша компания предлагает к поставке практически не ограниченный ассортимент компонентов как оптовыми, мелкооптовыми партиями, так и в розницу.

Благодаря развитой сети поставщиков, помогаем в поиске и приобретении экзотичных или снятых с производства компонентов.

Наша компания это:

- Гарантия качества поставляемой продукции
- Широкий ассортимент
- Минимальные сроки поставок
- Техническая поддержка
- Подбор комплектации
- Индивидуальный подход
- Гибкое ценообразование
- Работаем по 275 ФЗ

ООО «НИОКР СИТЕМС»
Москва, 125362, Россия, ул. Вишневая, д. 9, к. 1, Блок 104 а и 104 в

Телефон: 8 (495) 268-14-82
Email: n@nsistems.ru

ИНН: 7735154786
ОГРН: 1167746717709