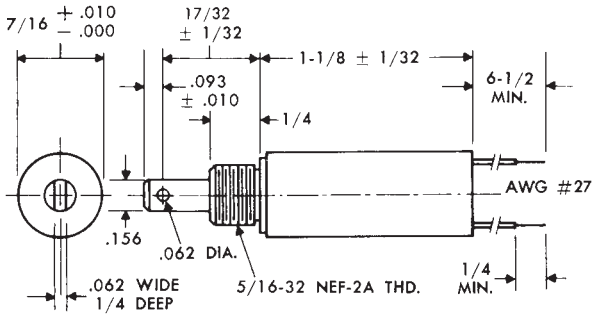


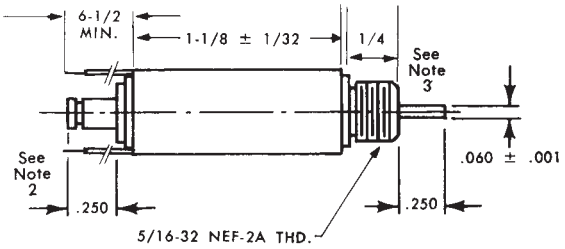


**Notes:**
1. Solenoid shown in energized position.
2. .250 Plunger configuration shown supplied for spring return only.
3. Largest size thread that may be threaded on push rod #0.
4. Push force approximately 90% of pull forces shown.

## Type C7-18

| Specifications | |
|---|---|
| **Size** | 7/16″ Diameter x 1⅛″ Long (From Mounting Surface) |
| **Weight** | ½ Oz. Max. |
| **Mounting** | 5/16-32 Threaded Bushing (Nut and Lockwasher Supplied) |
| **Dielectric Strength** | 500 VRMS |
| **Insulation Material** | Class "A" (105° C) |
| **Life Expectancy** | 10 Million Cycles at Rated Load |
| **Nominal Coil Power** | Continuous Duty—2 Watts<br>Intermittent Duty (10%)—10 Watts<br>(One Minute Max. on Time) |

| Standard Coils | | |
|---|---|---|
| **Nominal Volts (D.C.)** | **Resistance (OHMS ± 10%) at 25°C** | |
| | **Continuous Duty** | **Intermittent Duty** |
| 6 | 18 | 3.6 |
| 12 | 72 | 14.4 |
| 24 | 288 | 58.0 |
| 110 | 6613 | 1323.0 |
| Other Coils and Duty Cycles Available Upon Request | | |

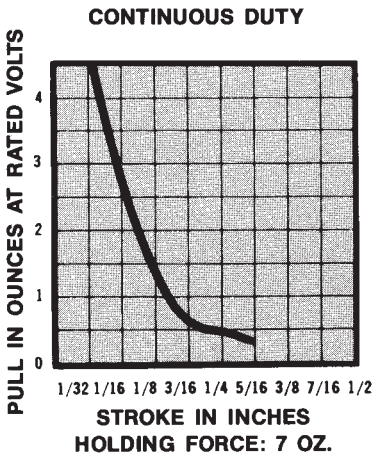


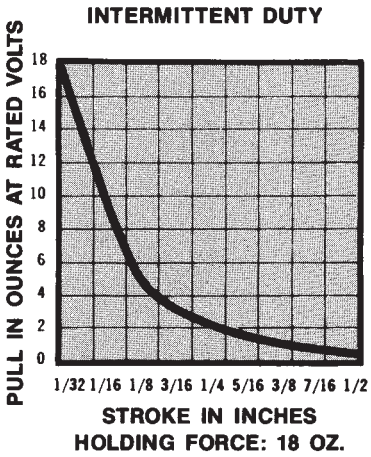

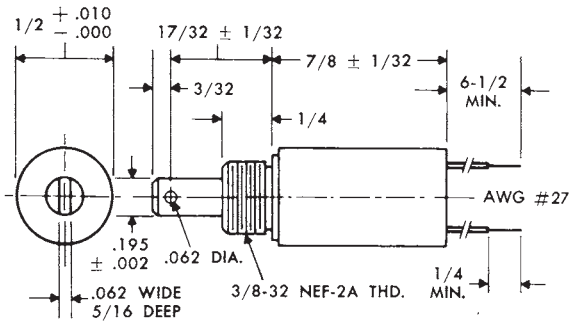


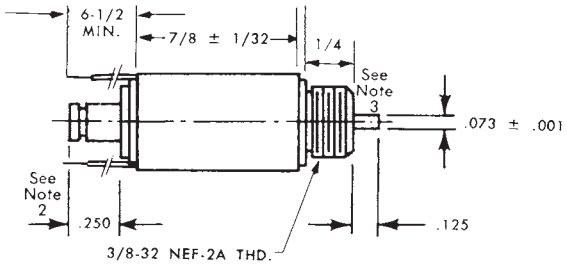


**Notes:**
1. Solenoid shown in energized position.
2. .250 Plunger configuration shown supplied for spring return only.
3. Largest size thread that may be threaded on push rod #1.
4. Push force approximately 90% of pull forces shown.

## Type C8-14

| Specifications | |
|---|---|
| **Size** | ½" Diameter x ⅞" Long (From Mounting Surface) |
| **Weight** | 1 Oz. Max. |
| **Mounting** | ⅜-32 Threaded Bushing (Nut and Lockwasher Supplied) |
| **Dielectric Strength** | 500 VRMS |
| **Insulation Material** | Class "A" (105° C) |
| **Life Expectancy** | 10 Million Cycles at Rated Load |
| **Nominal Coil Power** | Continuous Duty—2.4 Watts<br>Intermittent Duty (10%)—7 Watts<br>(One Minute Max. on Time) |

| Standard Coils | | |
|---|---|---|
| **Nominal Volts (D.C.)** | **Resistance (OHMS ± 10%) at 25°C** | |
| | **Continuous Duty** | **Intermittent Duty** |
| 6 | 15 | 5.0 |
| 12 | 60 | 20.6 |
| 24 | 240 | 82.0 |
| 110 | 5510 | 1890.0 |
| Other Coils and Duty Cycles Available Upon Request | | |

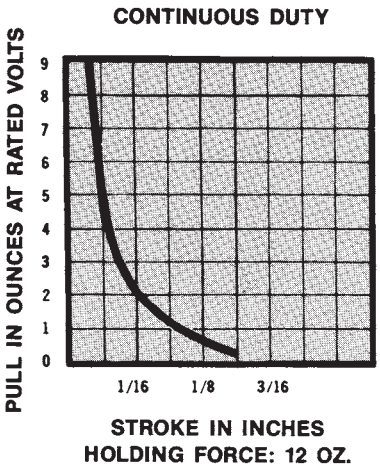


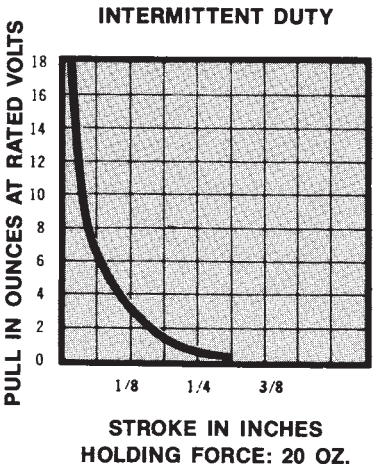

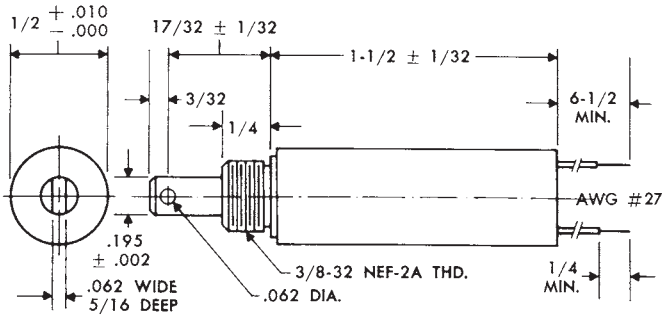


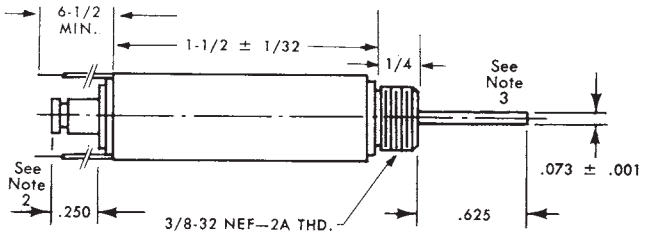


**Notes:**
1. Solenoid shown in energized position.
2. .250 Plunger configuration shown supplied for spring return only.
3. Largest size thread that may be threaded on push rod #1.
4. Push force approximately 90% of pull forces shown.

## Type C8-24

| Specifications | |
|---|---|
| **Size** | ½" Diameter x 1½" Long (From Mounting Surface) |
| **Weight** | 1½ Oz. Max. |
| **Mounting** | ⅜-32 Threaded Bushing (Nut and Lockwasher Supplied) |
| **Dielectric Strength** | 500 VRMS |
| **Insulation Material** | Class "A" (105° C) |
| **Life Expectancy** | 10 Million Cycles at Rated Load |
| **Nominal Coil Power** | Continuous Duty—3.5 Watts<br>Intermittent Duty (10%)—15 Watts<br>(One Minute Max. on Time) |

| Standard Coils | | |
|---|---|---|
| **Nominal Volts (D.C.)** | **Resistance (OHMS ± 10%) at 25°C** | |
| | **Continuous Duty** | **Intermittent Duty** |
| 6 | 10.3 | 2.4 |
| 12 | 41.0 | 9.6 |
| 24 | 165.0 | 38.5 |
| 110 | 3780.0 | 882.0 |
| Other Coils and Duty Cycles Available Upon Request | | |

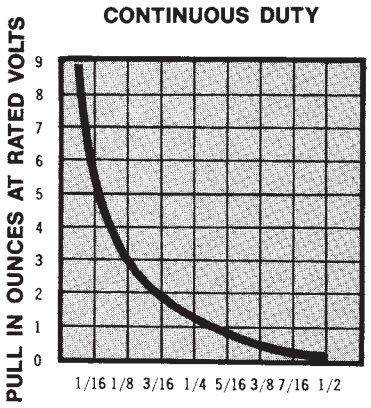


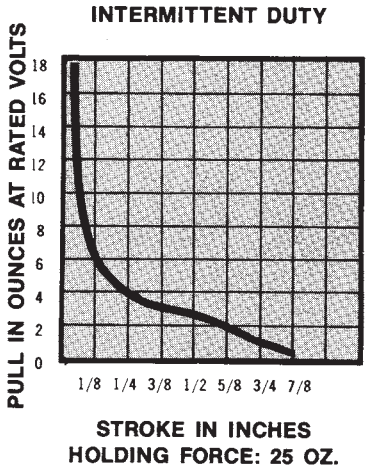

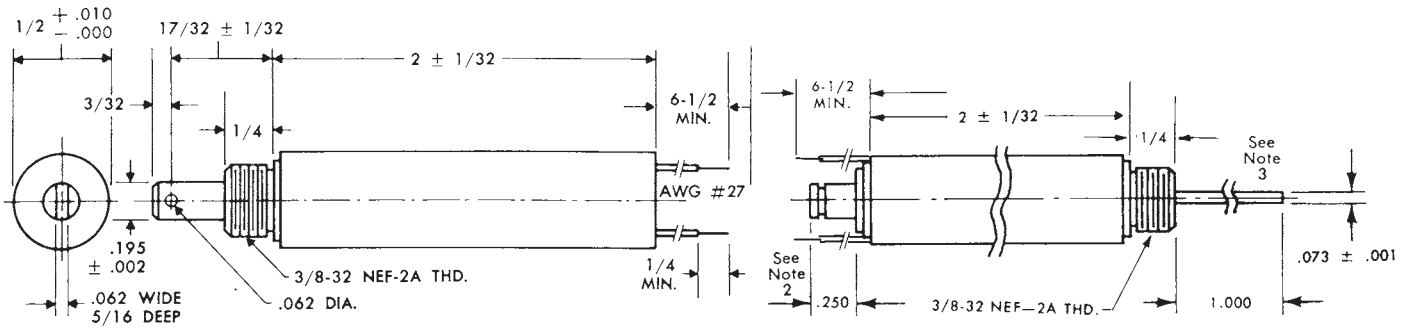


**Notes:**
1. Solenoid shown in energized position.
2. .250 Plunger configuration shown supplied for spring return only.
3. Largest size thread that may be threaded on push rod #1.
4. Push force approximately 90% of pull forces shown.

## Type C8-32

| Specifications | |
|---|---|
| **Size** | ½" Diameter x 2" Long (From Mounting Surface) |
| **Weight** | 2 Oz. Max. |
| **Mounting** | ⅜-32 Threaded Bushing (Nut and Lockwasher Supplied) |
| **Dielectric Strength** | 500 VRMS |
| **Insulation Material** | Class "A" (105° C) |
| **Life Expectancy** | 10 Million Cycles at Rated Load |
| **Nominal Coil Power** | Continuous Duty—4 Watts<br>Intermittent Duty (10%)—20 Watts<br>(One Minute Max. on Time) |

| Standard Coils | | |
|---|---|---|
| **Nominal Volts (D.C.)** | **Resistance (OHMS ± 10%) at 25°C** | |
| | **Continuous Duty** | **Intermittent Duty** |
| 6 | 9 | 1.8 |
| 12 | 36 | 7.2 |
| 24 | 145 | 29.0 |
| 110 | 3306 | 661.0 |
| Other Coils and Duty Cycles Available Upon Request | | |

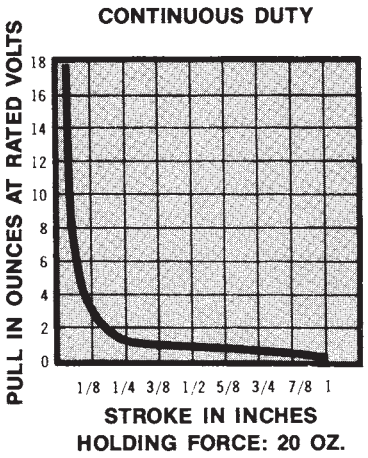


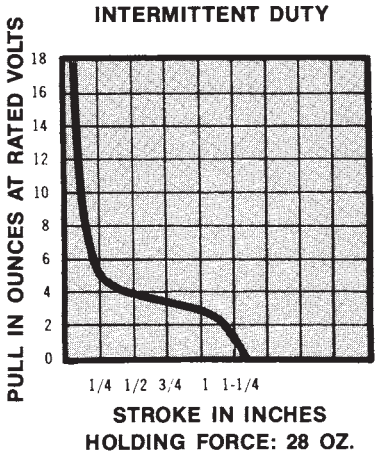

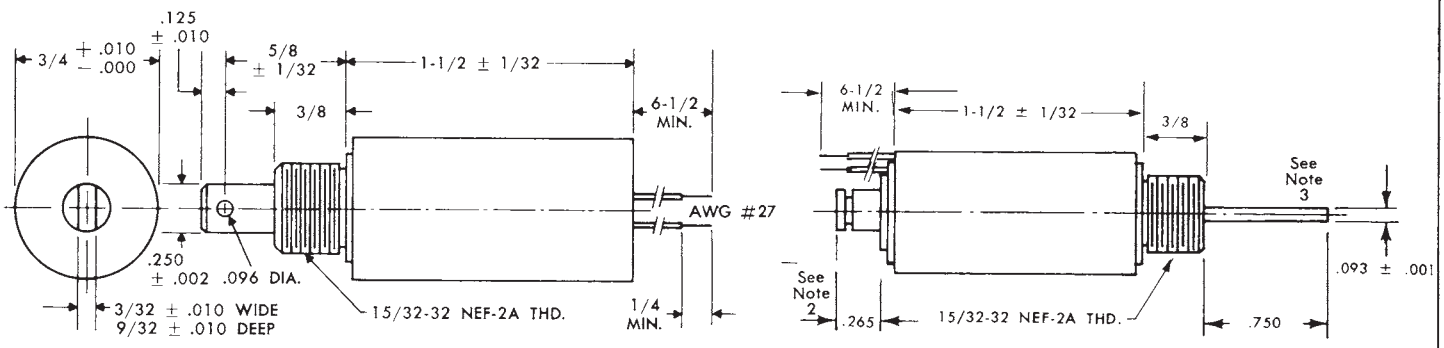


**Notes:**
1. Solenoid shown in energized position.
2. .265 Plunger configuration shown supplied for spring return only.
3. Largest size thread that may be threaded on push rod #3.
4. Push force approximately 90% of pull forces shown.

## Type C12-24

| Specifications | |
|---|---|
| **Size** | ¾″ Diameter x 1½″ Long (From Mounting Surface) |
| **Weight** | 3 Oz. Max. |
| **Mounting** | 15/32-32 Threaded Bushing (Nut and Lockwasher Supplied) |
| **Dielectric Strength** | 500 VRMS |
| **Insulation Material** | Class "A" (105° C) |
| **Life Expectancy** | 10 Million Cycles at Rated Load |
| **Nominal Coil Power** | Continuous Duty—3.5 Watts<br>Intermittent Duty (10%)—22 Watts<br>(One Minute Max. on Time) |

| Standard Coils | | |
|---|---|---|
| **Nominal Volts (D.C.)** | **Resistance (OHMS ± 10%) at 25°C** | |
| | **Continuous Duty** | **Intermittent Duty** |
| 6 | 10.3 | 1.6 |
| 12 | 41.0 | 6.5 |
| 24 | 165.0 | 26.0 |
| 110 | 3780.0 | 600.0 |
| Other Coils and Duty Cycles Available Upon Request | | |

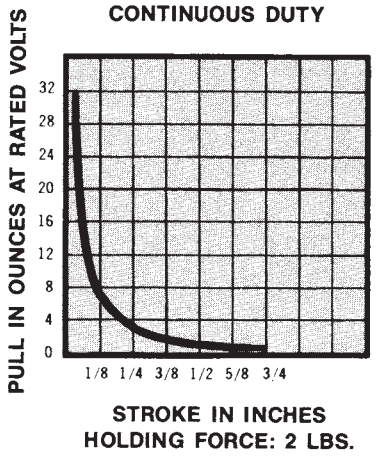


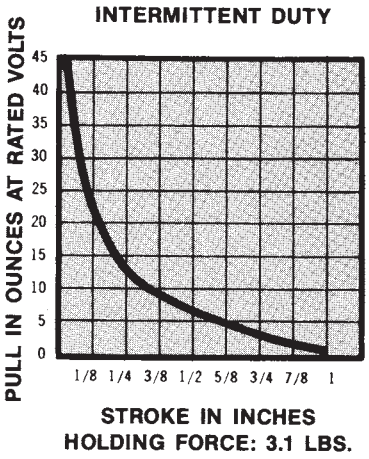

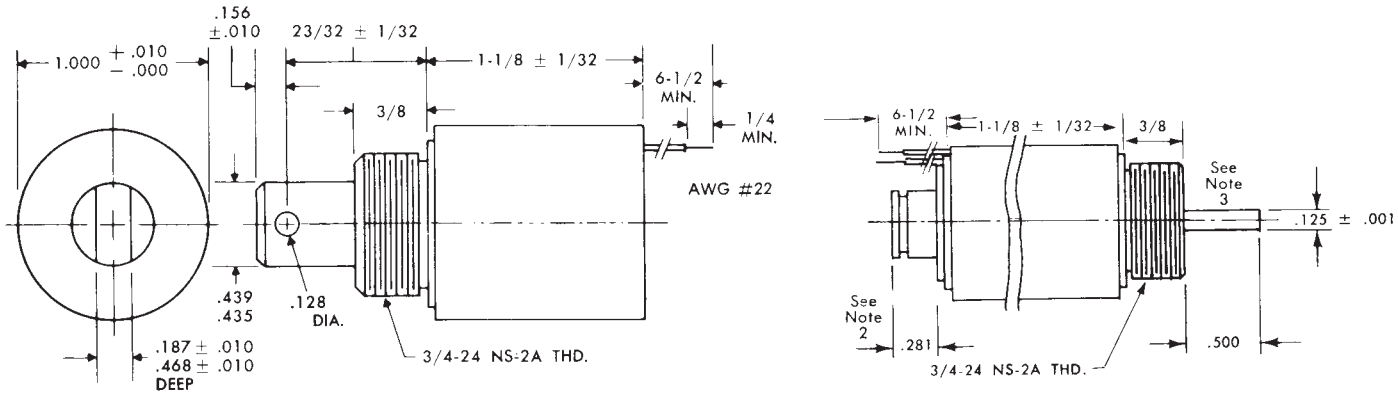


**Notes:**
1. Solenoid shown in energized position.
2. .281 Plunger configuration shown supplied for spring return only.
3. Largest size thread that may be threaded on push rod #5.
4. Push force approximately 90% of pull forces shown.

## Type C16-18

| Specifications | |
|---|---|
| **Size** | 1″ Diameter x 1⅛″ Long (From Mounting Surface) |
| **Weight** | 4 Oz. Max. |
| **Mounting** | ¾-24 Threaded Bushing (Nut and Lockwasher Supplied) |
| **Dielectric Strength** | 500 VRMS |
| **Insulation Material** | Class "A" (105° C) |
| **Life Expectancy** | 10 Million Cycles at Rated Load |
| **Nominal Coil Power** | Continuous Duty—4 Watts<br>Intermittent Duty (10%)—19 Watts<br>(One Minute Max. on Time) |

**Standard Coils**

| Nominal Volts (D.C.) | Resistance (OHMS ± 10%) at 25°C | |
|---|---|---|
| | Continuous Duty | Intermittent Duty |
| 6 | 9 | 1.9 |
| 12 | 36 | 7.6 |
| 24 | 144 | 30.0 |
| 110 | 3306 | 696.0 |

Other Coils and Duty Cycles Available Upon Request

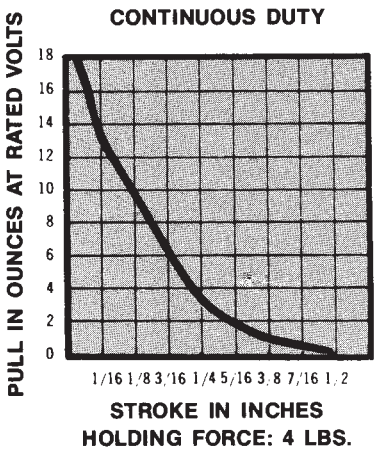


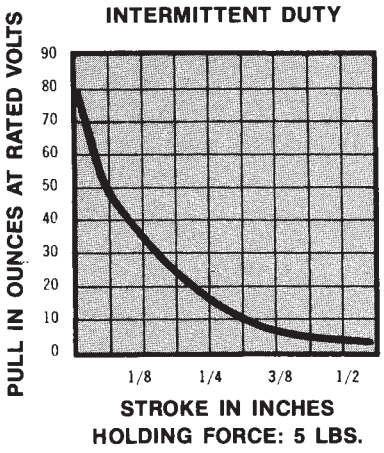

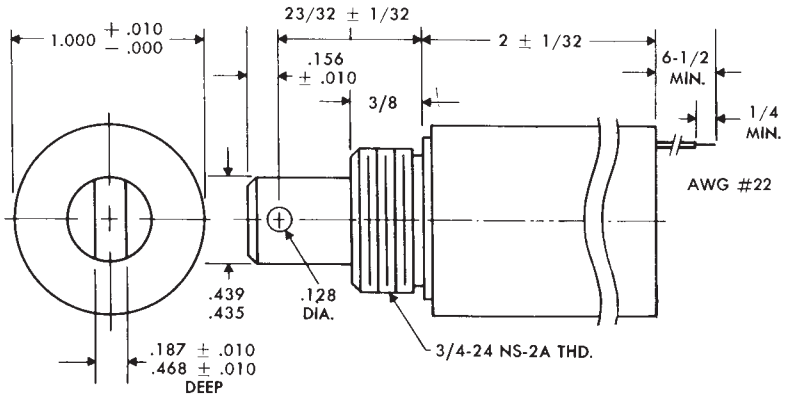


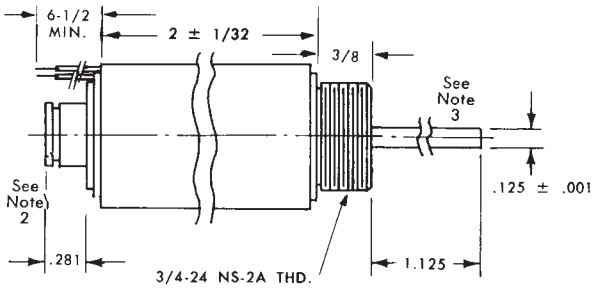


**Notes:**
1. Solenoid shown in energized position.
2. .281 Plunger configuration shown supplied for spring return only.
3. Largest size thread that may be threaded on push rod #5.
4. Push force approximately 90% of pull forces shown.

## Type C16-32

| Specifications | |
|---|---|
| **Size** | 1″ Diameter x 2″ Long (From Mounting Surface) |
| **Weight** | 5½ Oz. Max. |
| **Mounting** | ¾-24 Threaded Bushing (Nut and Lockwasher Supplied) |
| **Dielectric Strength** | 500 VRMS |
| **Insulation Material** | Class "A" (105° C) |
| **Life Expectancy** | 10 Million Cycles at Rated Load |
| **Nominal Coil Power** | Continuous Duty—5.5 Watts<br>Intermittent Duty (10%)—38 Watts<br>(One Minute Max. on Time) |

**Standard Coils**

| Nominal Volts (D.C.) | Resistance (OHMS ± 10%) at 25°C | |
|---|---|---|
| | Continuous Duty | Intermittent Duty |
| 6 | 6.5 | .95 |
| 12 | 26.0 | 3.80 |
| 24 | 105.0 | 15.00 |
| 110 | 2405 | 348.0 |
| Other Coils and Duty Cycles Available Upon Request | | |

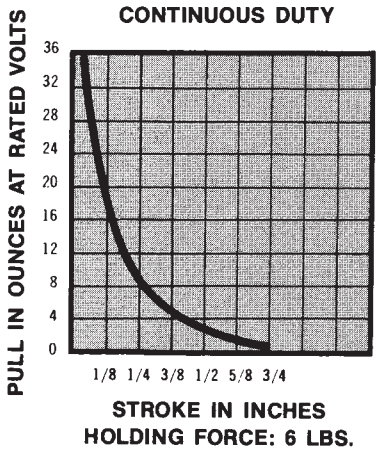


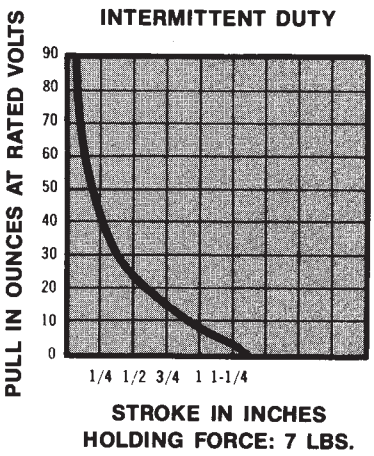

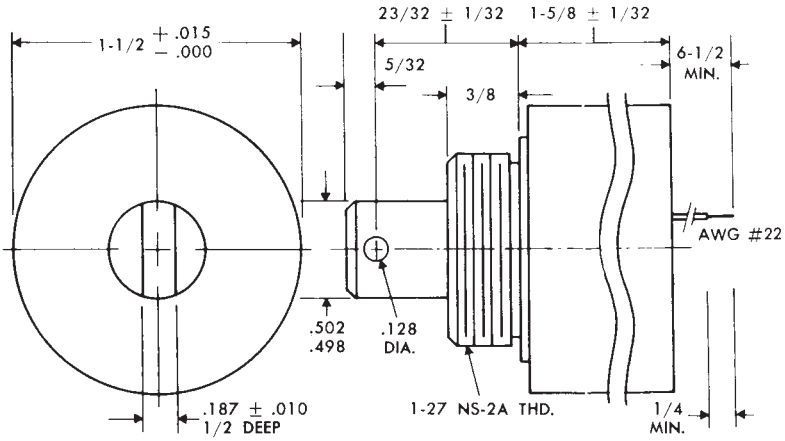


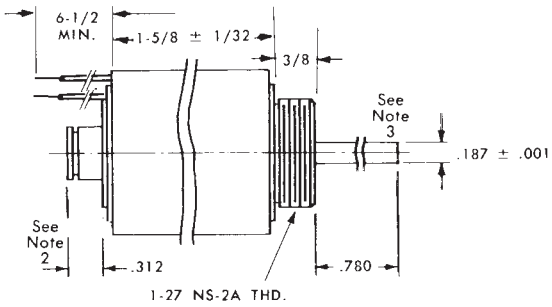


**Notes:**
1. Solenoid shown in energized position.
2. .312 Plunger configuration shown supplied for spring return only.
3. Largest size thread that may be threaded on push rod #10.
4. Push force approximately 90% of pull forces shown.

## Type C24-26

| Specifications | |
|---|---|
| **Size** | 1½" Diameter x 1⅝" Long (From Mounting Surface) |
| **Weight** | 10 Oz. Max. |
| **Mounting** | 1-27 Threaded Bushing (Nut and Lockwasher Supplied) |
| **Dielectric Strength** | 500 VRMS |
| **Insulation Material** | Class "A" (105° C) |
| **Life Expectancy** | 10 Million Cycles at Rated Load |
| **Nominal Coil Power** | Continuous Duty—7 Watts<br>Intermittent Duty (10%)—40 Watts<br>(One Minute Max. on Time) |

| Standard Coils | | |
|---|---|---|
| **Nominal Volts (D.C.)** | **Resistance (OHMS ± 10%) at 25°C** | |
| | **Continuous Duty** | **Intermittent Duty** |
| 6 | 5.0 | .9 |
| 12 | 20.6 | 3.6 |
| 24 | 82.0 | 14.0 |
| 110 | 1890.0 | 331.0 |
| Other Coils and Duty Cycles Available Upon Request | | |

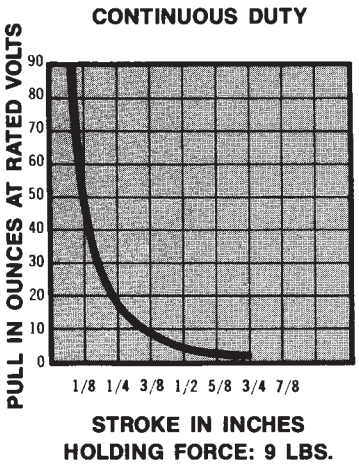


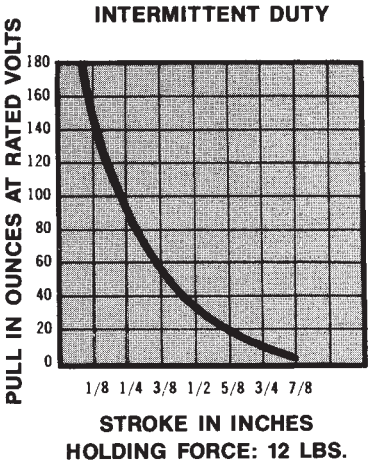

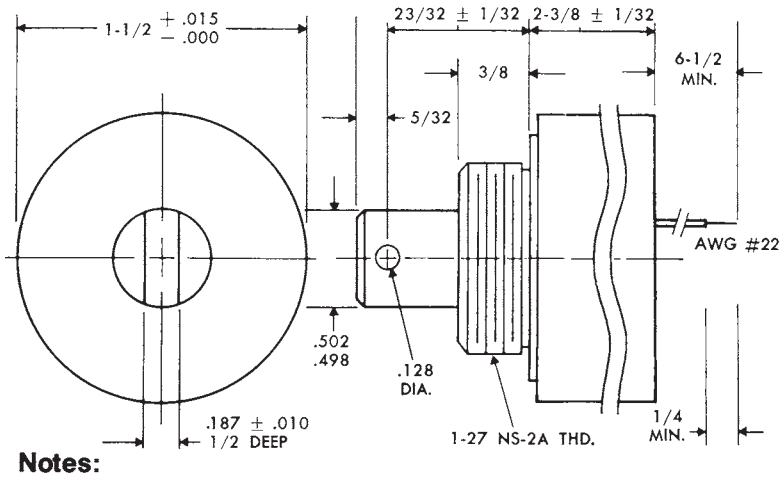


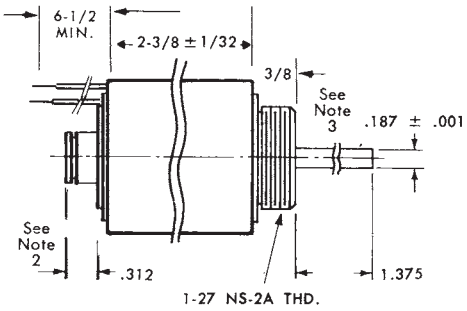


**Notes:**
1. Solenoid shown in energized position.
2. .312 Plunger configuration shown supplied for spring return only.
3. Largest size thread that may be threaded on push rod #10.
4. Push force approximately 90% of pull forces shown.

## Type C24-38

| Specifications | |
|---|---|
| **Size** | 1½" Diameter x 2⅜" Long (From Mounting Surface) |
| **Weight** | 18 Oz. Max. |
| **Mounting** | 1-27 Threaded Bushing (Nut and Lockwasher Supplied) |
| **Dielectric Strength** | 500 VRMS |
| **Insulation Material** | Class "A" (105° C) |
| **Life Expectancy** | 10 Million Cycles at Rated Load |
| **Nominal Coil Power** | Continuous Duty—10 Watts<br>Intermittent Duty (10%)—60 Watts<br>(One Minute Max. on Time) |

| Standard Coils | | |
|---|---|---|
| **Nominal Volts (D.C.)** | **Resistance (OHMS ± 10%) at 25°C** | |
| | **Continuous Duty** | **Intermittent Duty** |
| 6 | 3.6 | .6 |
| 12 | 14.5 | 2.4 |
| 24 | 58.0 | 9.6 |
| 110 | 1323.0 | 220.0 |
| Other Coils and Duty Cycles Available Upon Request | | |

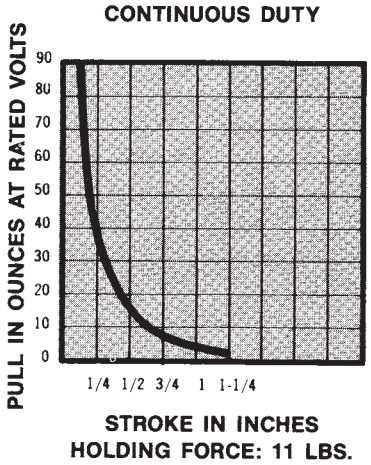


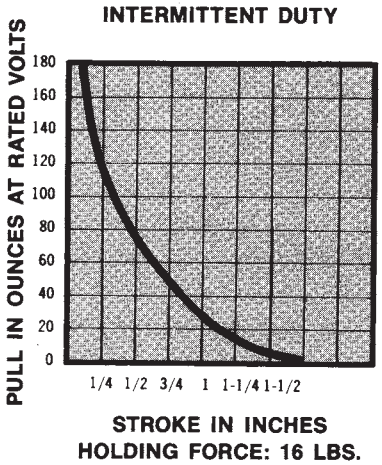

НИОКР СИСТЕМС

**ООО «НИОКРсистемс» -** это оперативные поставки широкого спектра электронных компонентов отечественного и импортного производства напрямую от производителей и с крупнейших мировых складов. Реализуемая нашей компанией продукция насчитывает более полумиллиона наименований.

Благодаря этому наша компания предлагает к поставке практически не ограниченный ассортимент компонентов как оптовыми, мелкооптовыми партиями, так и в розницу.

Благодаря развитой сети поставщиков, помогаем в поиске и приобретении экзотичных или снятых с производства компонентов.

## Наша компания это:

- Гарантия качества поставляемой продукции
- Широкий ассортимент
- Минимальные сроки поставок
- Техническая поддержка
- Подбор комплектации
- Индивидуальный подход
- Гибкое ценообразование
- Работаем по 275 ФЗ

ООО «НИОКР СИТЕМС»
Москва, 125362, Россия, ул. Вишневая, д. 9, к. 1, Блок 104 а и 104 в

Телефон: 8 (495) 268-14-82
Email: n@nsistems.ru

ИНН: 7735154786
ОГРН: 1167746717709