ISD1400 SERIES

SINGLE-CHIP

VOICE RECORD/PLAYBACK DEVICES

16- AND 20-SECOND DURATION

TABLE OF CONTENTS

1. GENERAL DESCRIPTION **3**

2. FEATURES **3**

3. BLOCK DIAGRAM **4**

4. PIN CONFIGURATION **5**

5. PIN DESCRIPTION **6**

6. FUNCTIONAL DESCRIPTION **10**

6.1. DETAILED DESCRIPTION 10
6.2. OPERATIONAL MODES 11
6.2.1. Operational Modes Description *11*

7. TIMING DIAGRAMS **13**

8. ABSOLUTE MAXIMUM RATINGS **14**

8.1 OPERATING CONDITIONS 15

9. ELECTRICAL CHARACTERISTICS **16**

9.1. PARAMETERS FOR PACKAGED PARTS 16
9.1.1. Typical Parameter Variation with Voltage and Temperature *19*
9.2. PARAMETERS FOR DIE 20
9.2.1. Typical Parameter Variation with Voltage and Temperature *23*

10. TYPICAL APPLICATION CIRCUIT **24**

11. PACKAGE DRAWING AND DIMENSIONS **27**

11.1. 28-LEAD 300 MIL PLASTIC SMALL OUTLINE IC (SOIC) 27
11.2. 28-LEAD 600 MIL PLASTIC DUAL INLINE PACKAGE (PDIP) 28
11.3. DIE PHYSICAL LAYOUT [1] 29

12. ORDERING INFORMATION **31**

13. VERSION HISTORY **32**

1. GENERAL DESCRIPTION

Winbond's ISD1400 ChipCorder® series provide high-quality, single-chip, Record/Playback solutions to short-duration messaging applications. The CMOS devices include an on-chip oscillator, microphone preamplifier, automatic gain control, anti-aliasing filter, smoothing filter, and speaker amplifier. A minimum Record/Playback subsystem can be configured with a microphone, a speaker, several passive components, two push buttons and a power source. Recordings are stored into on-chip non-volatile memory cells, providing zero-power message storage. This unique, single-chip solution is made possible through Winbond's patented Multi-Level Storage (MLS) technology. Voice and audio signals are stored directly into memory in their natural form, providing high-quality, solid-state voice reproduction.

2. FEATURES

- Single +5 volt power supply
- Duration: 14 and 20 seconds.
- Easy-to-use single-chip, voice record/playback solution
- High-quality, natural voice/audio reproduction
- Manual switch or microcontroller compatible Playback can be edge- or level-activated
- Directly cascadable for longer durations
- Automatic power-down (push-button mode)
    - Standby current 1 μA (typical)
- Zero-power message storage
    - Eliminates battery backup circuits
- Fully addressable to handle multiple messages
- 100-year message retention (typical)
- 100,000 record cycles (typical)
- On-chip oscillator
- Programmer support for play-only applications
- Packaged types: Leaded and Lead-Free
- Available in die, PDIP and SOIC
- Temperature:
    - Commercial - Packaged unit : 0°C to 70°C, Die : 0°C to 50°C
    - Industrial - Packaged unit : -40°C to 85°C

3. BLOCK DIAGRAM

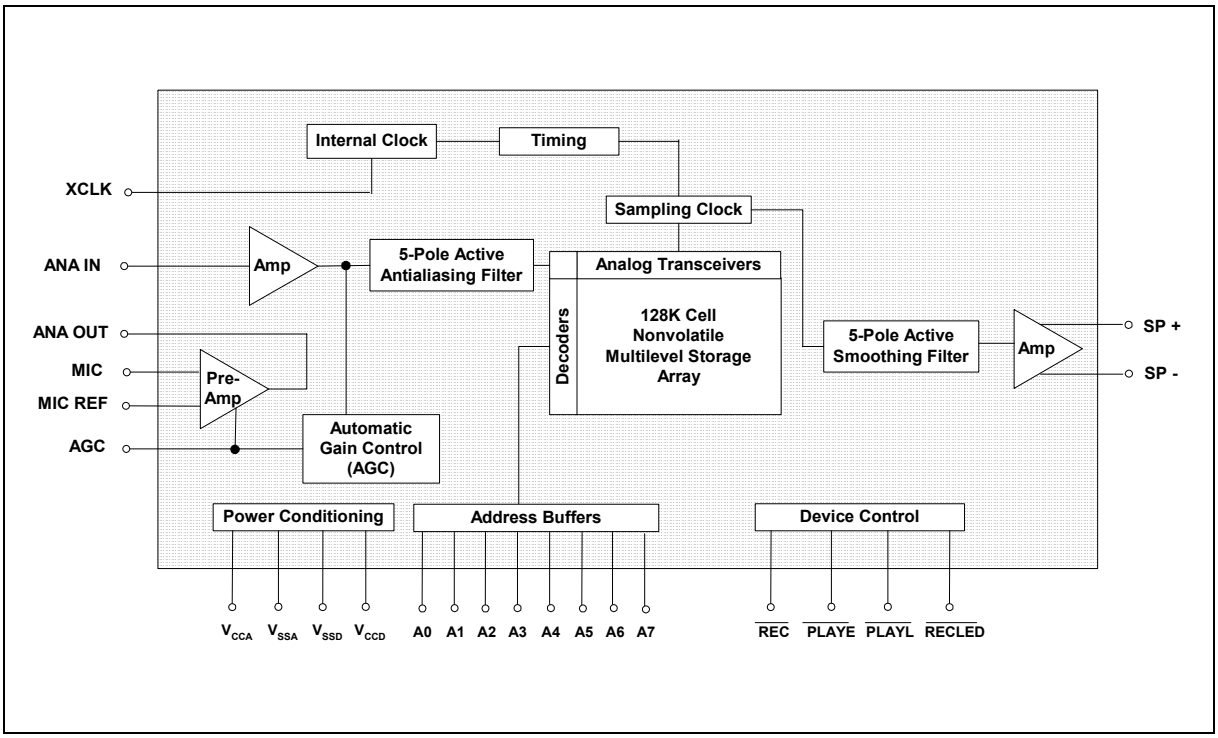

4. PIN CONFIGURATION

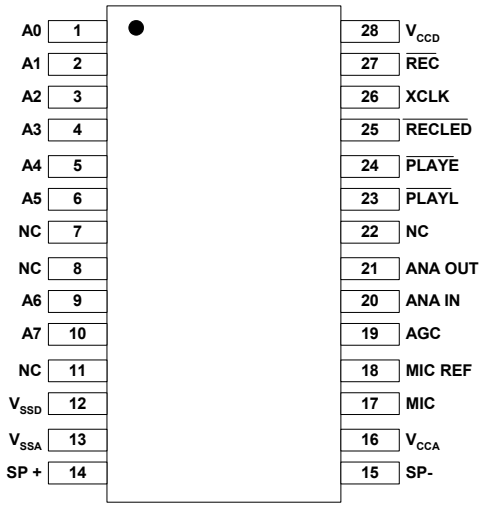

SOIC / PDIP

Note: NC means must be No connect

5. PIN DESCRIPTION

PIN NAME	PIN NO	FUNCTION
A0-A7	1-6, 9, 10	**Address Inputs**: The address inputs have two functions, depending on the level of the two Most Significant Bits (MSB) of the address. If either or both of the two MSBs are LOW, the inputs are all interpreted as address bits and are used as the start address for the current record or playback cycle. The address pins are inputs only and do not output internal address information as the operation progresses. Address inputs are latched by the falling edge of $\overline{PLAYE}$, $\overline{PLAYL}$, or $\overline{REC}$. If both A6 & A7 are HIGH, then the device is in special operational modes. Please refer to operational modes section for details.
NC	7, 8, 11, 22	**NC:** No Connect
V_{SSD}, V_{SSA}	12, 13	**Ground**: Similar to V_{CCA} and V_{CCD}, the analog and digital circuits internal to the ISD1400 series use separate ground buses to minimize noise. These pins should be tied together as close as possible to the device.
SP+, SP-	14, 15	**Speaker Outputs**: The SP+ and SP- pins provide direct drive for loudspeakers with impedances as low as 16 Ω. A single output may be used, but, for direct-drive loudspeakers, the two opposite-polarity outputs provide an improvement in output power of up to four times over a single-ended connection. Forthermore, when SP+ and SP- are used, a speakercoupling capacitor is not required. A single-ended connection will require an AC-coupling capacitor between the SP pin and the speaker. The speaker outputs are in a high-impedance state during a record cycle, and held at V_{SSA} during power down.
V_{CCA}, V_{CCD}	16, 28	**Supply Voltage**: Analog and digital circuits internal to the ISD1400 series use separate power buses to minimize noise on the chip. These voltage buses are brought out to separate pins on the package and should be tied together as close to the supply as possible. It is important that the power supply be decoupled as close to the package as possible.
MIC	17	**Microphone**: The microphone input transfers its signal to the on-chip preamplifier. An on-chip Automatic Gain Control (AGC) circuit controls the gain of this preamplifier from –15 to 24dB. An external microphone should be AC coupled to this pin via a series capacitor. The capacitor value, together with the internal 10 KΩ resistance on this pin, determines the low-frequency cutoff for the ISD1400 series passband. See Winbond's Application Information for additional information on low-frequency cutoff calculation.

PIN NAME	PIN NO	FUNCTION
MIC REF	18	**Microphone Reference**: The MIC REF input is the inverting input to the microphone preamplifier. This provides a noise-canceling or common-mode rejection input to the device when connected to a differential microphone.
AGC	19	**Automatic Gain Control (AGC)**: The AGC dynamically adjusts the gain of the preamplifier to compensate for the wide range of microphone input levels. The AGC allows the full range of sound, from whispers to loud sounds, to be recorded with minimal distortion. The "attack" time is determined by the time constant of a 5 KΩ internal resistance and an external capacitor (C6 on the schematic of section 11, Figure 5) connected from the AGC pin to V_{SSA} analog ground. The "release" time is determined by the time constant of an external resistor (R5) and an external capacitor (C6) connected in parallel between the AGC pin and V_{SSA} analog ground. Nominal values of 470 KΩ and 4.7 µF give satisfactory results in most cases.
ANA IN	20	**Analog Input**: The analog input pin transfers its signal to the chip for recording. For microphone inputs, the ANA OUT pin should be connected via an external capacitor to the ANA IN pin. This capacitor value, together with the 3.0 KΩ input impedance of ANA IN, is selected to give additional cutoff at the low-frequency end of the voice passband. If the desired input is derived from a source other than a microphone, the signal can be fed, capacitively coupled, into the ANA IN pin directly.
ANA OUT	21	**Analog Output**: This pin provides the preamplifier output to the user. The voltage gain of the preamplifier is determined by the voltage level at the AGC pin.
$\overline{\text{PLAYL}}$ [2]	23	**Playback, Level-Activated**: When this input signal is held LOW, a playback cycle is initiated, and playback continues until $\overline{\text{PLAYL}}$ is pulled HIGH, or an EOM marker is detected. The device automatically powers down and enters into standby mode upon completion of a playback cycle.
$\overline{\text{PLAYE}}$ [2]	24	**Playback, Edge-Activated**: When a LOW-going transition is input to this pin, a playback cycle begins. Taking $\overline{\text{PLAYE}}$ HIGH during a playback cycle will not terminate the current cycle. Playback continues until an EOM is encountered. Upon completion of a playback cycle, the device automatically powers down and enters into standby mode.

<table>
<tr><th>PIN NAME</th><th>PIN NO</th><th>FUNCTION</th></tr>
<tr><td>$\overline{\text{RECLED}}$</td><td>25</td><td>Record LED: The $\overline{\text{RECLED}}$ output is LOW during a record cycle. It can be used to drive an LED to indicate a record cycle is in progress. In addition, $\overline{\text{RECLED}}$ pulses LOW momentarily when an end-of-message is encountered in a playback operation.</td></tr>
<tr><td>XCLK</td><td>26</td><td>External Clock: The input has an internal pull-down device. The ISD1400 is configured at the factory with an internal sampling clock frequency that guarantees its minimum nominal record/playback time. For instance, an ISD1420 operating within specification will be observed to always have a minimum of 20 seconds of recording time. The sampling frequency is then maintained to a variation of ±2.25 percent over the commercial temperature and operating voltage ranges, while still maintaining the minimum specified recording duration. This will result in some devices having a few percent more than nominal recording time.

The Internal clock has a ±5 percent tolerance over the industrial temperature and voltage range. A regulated power supply is recommended for industrial temperature parts. If greater precision is required, the device can be clocked through the XCLK pin as follows:

EXTERNAL CLOCK SAMPLE RATES
<table>
<tr><th>Part Number</th><th>Sample Rate</th><th>Required Clock</th></tr>
<tr><td>ISD1416</td><td>8.0 kHz</td><td>1024 kHz</td></tr>
<tr><td>ISD1420</td><td>6.4 kHz</td><td>819.2 kHz</td></tr>
</table>
These recommended clock rates should not be varied because the antialiasing and smoothing filters are fixed, and aliasing problems can occur if the sample rate differs from the one recommended. The duty cycle on the input clock is not critical, as the clock is immediately divided by two. If the XCLK is not used, this input must be connected to ground.</td></tr>
</table>

PIN NAME	PIN NO	FUNCTION
$\overline{REC}$	27	**Record Input**: The $\overline{REC}$ input is an active-LOW record signal. The device records whenever $\overline{REC}$ is LOW. This signal must remain LOW for the duration of the recording. $\overline{REC}$ takes precedence over either playback ($\overline{PLAYE}$ or $\overline{PLAYL}$) signal. If $\overline{REC}$ is pulled LOW during a playback cycle, the playback immediately ceases and recording begins. A record cycle is completed when $\overline{REC}$ is pulled HIGH or the memory space is filled. And end-of-message marker (EOM) is internally recorded, enabling a subsequent playback cycle to terminate appropriately. The device automatically powers down to standby mode when $\overline{REC}$ goes HIGH.

Notes:

[1] The $\overline{REC}$ signal is debounced for 50 ms on the rising edge to prevent a false retriggering from a push-button switch.

[2] During playback, if either $\overline{PLAYE}$ or $\overline{PLAYL}$ is held LOW during EOM or OVF, the device will still enter into standby mode and the internal oscillator and timing generator will stop. However, the rising edge of $\overline{PLAYE}$ and $\overline{PLAYL}$ are not debounced and any subsequent falling edge (particularly switch bounce) present on the input pins will initiate another playback.

6. FUNCTIONAL DESCRIPTION

6.1. DETAILED DESCRIPTION

Speech/Sound Quality

The Winbond's ISD1400 series offer 6.4 and 8.0 kHz sampling frequencies, allowing the user a choice of speech quality options. The speech samples are stored directly into on-chip non-volatile memory without the digitization and compression associated with other solutions. Direct analog storage provides a very true, natural sounding reproduction of voice, music, tones, and sound effects not available with most solidstate digital solutions.

Duration

To meet end system requirements, the ISD1400 series offer single-chip solutions at 16 and 20 seconds.

TABLE 1: ISD1400 SERIES SUMMARY

Part Number	Duration (Seconds)	Input Sample Rate (kHz)	Typical Filter Pass Band* (kHz)
ISD1416	16	8.0	3.3
ISD1420	20	6.4	2.6

* 3dB roll-off-point

EEPROM Storage

One of the benefits of Winbond's ChipCorder® technology is the use of on-chip non-volatile memory, providing zero-power message storage. The message is retained for up to 100 years typically without power. In addition, the device can be re-recorded typically over 100,000 times.

Basic Operation

The ISD1400 ChipCorder® series are controlled by a single control signal, $\overline{REC}$, $\overline{PLAYE}$ (edge-activated playback) or $\overline{PLAYL}$ (level-activated playback). The ISD1400 parts are configured for simplicity of design in a single/multiple-message application. Using the address lines will allow multiple message applications.

Automatic Power-Down Mode

At the end of a playback or record cycle, the ISD1400 series automatically return to a low-power standby mode, consuming typically 0.5 µA. After a playback cycle, the device powers down automatically at the end of the message. After a record cycle, the device powers down immediately after $\overline{REC}$ is pulled to HIGH.

Addressing

In addition to providing single message application, the ISD1400 series provide a full addressing capability.

The ISD1400 series have 160 distinct addressable segments, providing the below resolutions. See Application Information for ISD1400 address tables.

TABLE 2: DEVICE PLAYBACK/RECORD DURATIONS

Part Number	Minimum Duration (Seconds)
ISD1416	100 ms
ISD1420	125 ms

6.2. OPERATIONAL MODES

The ISD1400 series have several built-in operational modes providing maximum functionality with a minimal additional components. The operational modes use the address pins, but are mapped to outside the normal address range. When the two Most Significant Bits (MSBs), A6 and A7, are HIGH, the remaining address signals are interpreted as mode bits and not as address bits. Therefore, operational modes and direct addressing are not compatible and cannot be used simultaneously.

There are two important considerations for using operational modes. Firstly, all operations begin initially at address 0, which is the beginning address. Later operations can begin at other address locations, depending on the operational mode(s) chosen. In addition, the address pointer is reset to 0 when the device is changed from record to playback but not from playback to record when A4 is HIGH in Operational Mode.

Secondly, an Operational Mode is executed when any of the control inputs, $\overline{PLAYE}$, $\overline{PLAYL}$ or $\overline{REC}$, goes LOW and the two MSBs are HIGH. This Operational Mode remains in effect until the next LOW-going control input signal, at which point the current address/mode levels are sampled and executed.

6.2.1. Operational Modes Description

The Operational Modes can be used in conjunction with a microcontroller, or they can be hardwired to provide the desired system operation.

A0 – Message Cueing

Message Cueing allows the user to skip through messages, without knowing the actual physical addresses of each message. Each LOW pulse causes the internal address pointer to skip to the next message. This mode is used for playback only and typically used with the A4 Operational Mode.

A1 – Delete $\overline{EOM}$ Markers

The A1 Operational Mode allows recording messages sequentially and playback as a single message with only one $\overline{EOM}$ set at the end of the final message.

A2 – Unused

A3 – Message Looping

The A3 Operational Mode allows repeating playback a message continuously from the beginning of the memory. A message can completely fill the ISD1400 device and will loop from beginning to end. Pulsing $\overline{PLAYE}$ will start the playback and pulsing $\overline{PLAYL}$ will end the playback.

A4 – Consecutive Addressing

During normal operation, the address pointer will reset when a message is played through to an $\overline{EOM}$ marker. The A4 Operational Mode inhibits the address pointer reset, allowing messages to be recorded or played back consecutively. When the device is in a static state; i.e., not recording or playback, momentarily taking this pin LOW will reset the address counter to zero.

A5 – Unsued

TABLE 3: OPERATIONAL MODES

Mode	Function	Typical Use	Jointly Compatible [1]
A0	Message cueing	Fast-forward through messages	A4
A1	Delete $\overline{EOM}$ markers	Position $\overline{EOM}$ marker at the end of the last message	A3, A4
A2	Unused		
A3	Looping	Continuous playback from Address 0	A1
A4	Consecutive addressing	Record/playback multiple consecutive messages	A0, A1
A5	Unused		

[1] Additional Operational Modes can be used simultaneously with the given mode.

7. TIMING DIAGRAMS

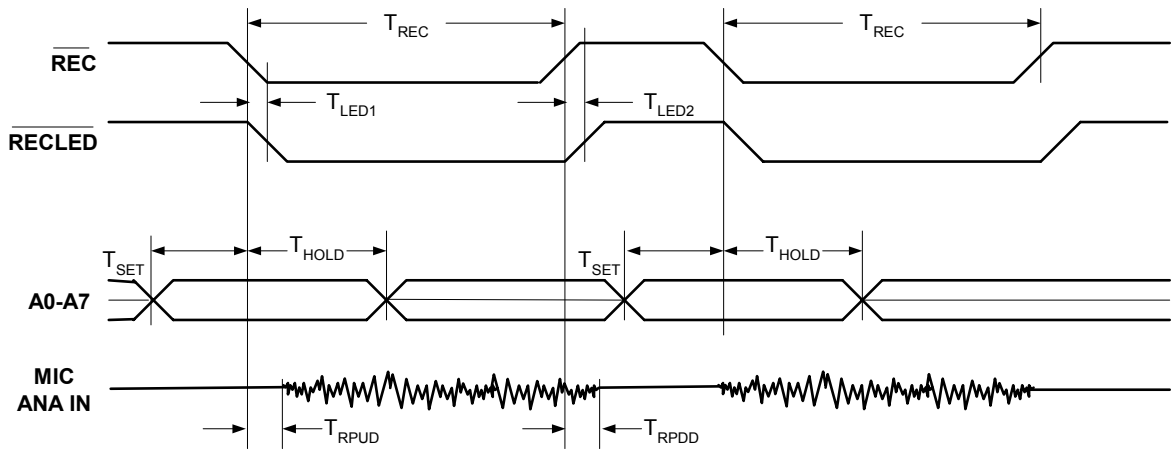

FIGURE 1: RECORD

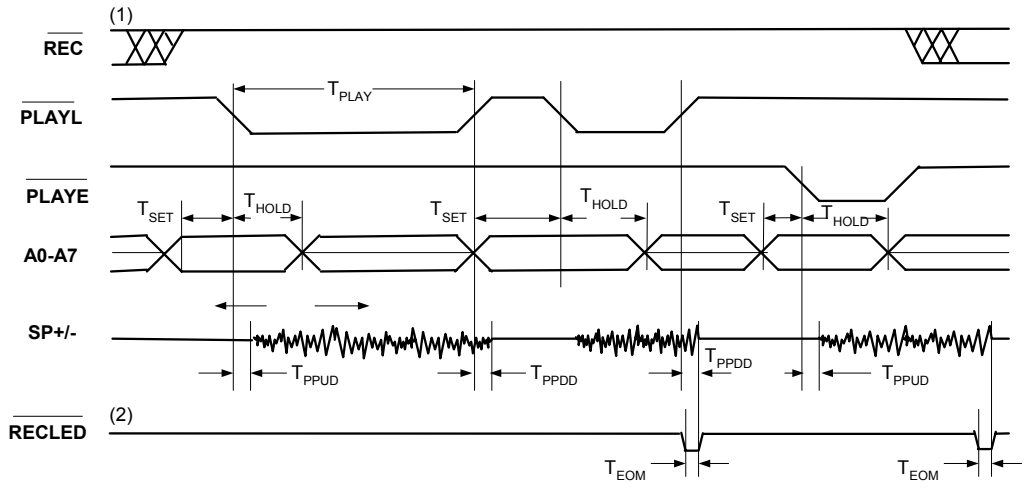

1. $\overline{\text{REC}}$ must be HIGH for the entire duration of a playback cycle.

2. $\overline{\text{RECLED}}$ funstions as an EOM playback.

FIGURE 2: PLAYBACK

8. ABSOLUTE MAXIMUM RATINGS[2]

TABLE 4: ABSOLUTE MAXIMUM RATINGS (PACKAGED PARTS)

CONDITIONS	VALUES
Junction temperature	150ºC
Storage temperature range	-65ºC to +150ºC
Voltage applied to any pin	(V_{SS} – 0.3V) to (V_{CC} + 0.3V)
Voltage applied to any pin (Input current limited to ±20 mA)	(V_{SS} – 1.0V) to (V_{CC} + 1.0V)
Lead temperature (Soldering – 10sec)	300ºC
V_{CC} – V_{SS}	-0.3V to +7.0V

TABLE 5: ABSOLUTE MAXIMUM RATINGS (DIE)

CONDITIONS	VALUES
Junction temperature	150ºC
Storage temperature range	-65ºC to +150ºC
Voltage applied to any pad	(V_{SS} – 0.3V) to (V_{CC} + 0.3V)
Voltage applied to any pad (Input current limited to ±20mA)	(V_{SS} – 1.0V) to (V_{CC} + 1.0V)
Lead Temperature (soldering 10 seconds)	330º C
V_{CC} – V_{SS}	-0.3V to +7.0V

[2] Stresses above those listed may cause permanent damage to the device. Exposure to the absolute maximum ratings may affect device reliability and performance. Functional operation is not implied at these conditions.

8.1 OPERATING CONDITIONS

TABLE 6: OPERATING CONDITIONS (PACKAGED PARTS)

CONDITIONS	VALUES
Commercial operating temperature range (Case temperature)	0ºC to +70ºC
Industrial operating temperature (Case temperature)	-40ºC to +85ºC
Supply voltage (V_{CC}) [1]	+4.5V to +5.5V
Ground voltage (V_{SS}) [2]	0V

TABLE 7: OPERATING CONDITIONS (DIE)

CONDITIONS	VALUES
Commercial operating temperature range	0ºC to +50ºC
Supply voltage (V_{CC}) [1]	+4.5V to +6.5V
Ground voltage (V_{SS}) [2]	0V

[1] $V_{CC} = V_{CCA} = V_{CCD}$

[2] $V_{SS} = V_{SSA} = V_{SSD}$

9. ELECTRICAL CHARACTERISTICS

9.1. PARAMETERS FOR PACKAGED PARTS

TABLE 8: DC PARAMETERS

PARAMETERS	SYMBOLS	MIN[2]	TYP[1]	MAX[2]	UNITS	CONDITIONS
Input Low Voltage	V_{IL}			0.8	V	
Input High Voltage	V_{IH}	2.4			V	
Output Low Voltage	V_{OL}			0.4	V	I_{OL} = 4.0 mA
Output High Voltage	V_{OH}	2.4			V	I_{OH} = -1.6 mA
V_{CC} Current (Operating)	I_{CC}		15	30	mA	V_{CC} = 5.5V[3], R_{EXT} = ∞
V_{CC} Current (Standby)	I_{SB}		0.5	10	µA	[3] [4]
Input Leakage Current	I_{IL}			±1	µA	
Input Current HIGH w/Pull Down	I_{ILPD}			130	µA	Force V_{CC} [5]
Output Load Impedance	R_{EXT}	16			Ω	Speaker Load
Preamp IN Input Resistance	R_{MIC}	4	9	17	KΩ	Pins 17, 18
ANA IN Input Resistance	$R_{ANA\ IN}$	2.5	3	5	KΩ	
Preamp Gain 1	A_{PRE1}	20	23	26	dB	AGC = 0.0V
Preamp Gain 2	A_{PRE2}		-45	-15	dB	AGC = 2.5V
ANA IN to SP+/- Gain	A_{ARP}	20	22	25	dB	
AGC Output Resistance	R_{AGC}	2.5	5	9.5	KΩ	
Preamp Out Source	I_{PREH}		-2		mA	@ V_{OUT} = 1.0V
Preamp In Sink	I_{PREL}		0.5		mA	@ V_{OUT} = 2.0V

[1] Typical values @ T_A = 25º and 5.0V.

[2] All Min/Max limits are guaranteed by Winbond via electronical testing or characterization. Not all specifications are 100 percent tested.

[3] V_{CCA} and V_{CCD} connected together.

[4] $\overline{REC}$, $\overline{PLAYL}$, and $\overline{PLAYE}$ must be at V_{CCD}.

[5] XCLK pin .

TABLE 9: AC PARAMETERS

CHARACTERISTICS	SYMBOLS	MIN[2]	TYP[1]	MAX[2]	UNITS	CONDITIONS
Sampling Frequency ISD1416 ISD1420	F_S			8.0 6.4	 kHz kHz	 [5] [5]
Filter Pass Band ISD1416 ISD1420	F_{CF}		 3.3 2.6		 kHz kHz	 3 dB Roll-Off Point[3][6] 3 dB Roll-Off Point[3][6]
Record Duration ISD1416 ISD1420	T_{REC}	 16 20			 sec sec	
Playback Duration ISD1416 ISD1420	T_{PLAY}	 16 20			 sec sec	 [5] [5]
$\overline{\text{RECLED}}$ ON Delay	T_{LED1}		5		msec	
$\overline{\text{RECLED}}$ OFF Delay ISD1416 ISD1420	T_{LED2}	30 40	38.9 48.6	95 110	msec msec	
Address Setup Time	T_{SET}	300			nsec	
Address Hold Time	T_{HOLD}	0			nsec	
Record Power-Up Delay ISD1416 ISD1420	T_{RPUD}		 26 32		 msec msec	
Record Power-Down Delay ISD1416 ISD1420	T_{RPDD}		 26 32		 msec msec	
Play Power-Up Delay ISD1416 ISD1420	T_{PPUD}		 26 32		 msec msec	
Play Power-Down Delay ISD1416 ISD1420	T_{PPDD}		6.5 8.1		 msec msec	

CHARACTERISTICS	SYMBOLS	MIN[2]	TYP[1]	MAX[2]	UNITS	CONDITIONS
$\overline{EOM}$ Pulse Width ISD1416 ISD1420	T_{EOM}		 12.5 15.625		 msec msec	
Total Harmonic Distortion	THD		1	3	%	@ 1 kHz
Speaker Output Power	P_{OUT}		12.2		mW	R_{EXT} = 16 Ω
Voltage Across Speaker Pins	V_{OUT}		1.25	2.5	V p-p	R_{EXT} = 600 Ω
MIC Input Voltage	V_{IN1}			20	mV	Peak-to-Peak[5]
ANA IN Input Voltage	V_{IN2}			50	mV	Peak-to-Peak

Notes:

[1] Typical values @ T_A = 25º and 5.0V.

[2] All Min/Max limits are guaranteed by Winbond via electronical testing or characterization. Not all specifications are 100 percent tested.

[3] Low-frequency cutoff depends upon the value of external capacitors (see Pin Descriptions)

[4] With 5.1 K Ω series resistor at ANA IN.

[5] Sampling Frequency and playback duration can vary as much as ±2.25 percent over the commercial temperature and voltage rangs. It may vary as much as ±5 percent over the industrial temperature and voltage ranges. All devices will meet the maximum sampling frequency and minimum playback duration parameters. For greater stability, an external clock can be utilized (see Pin Descriptions)

[6] Filter specification applies to the anti-aliasing filter and the smoothing filter. Typical Parameter Variation with Voltage and Temperature. This parameter is not checked during production testing and may vary due to process variations and other factors. Therefore, the customer should not rely upon this value for testing purposes.

9.1.1. Typical Parameter Variation with Voltage and Temperature

Chart 1: Record Mode Operating Current (I_{CC})

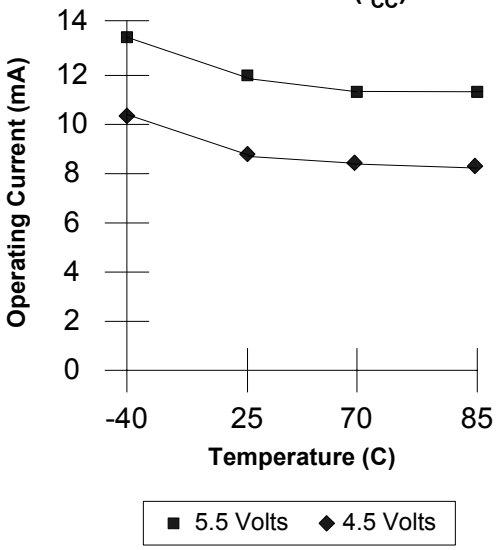

Chart 3: Standby Current (I_{SB})

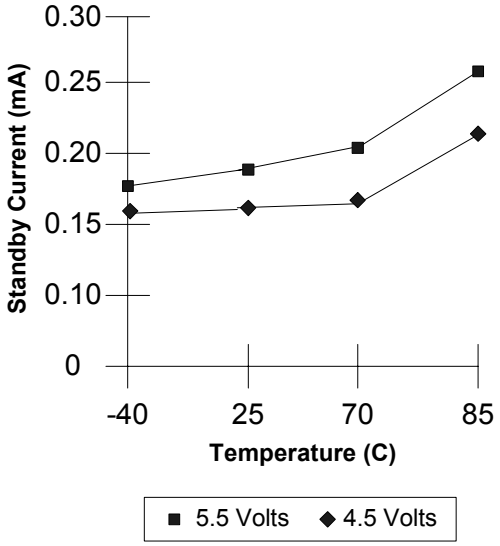

Chart 2: Total Harmonic Distortion

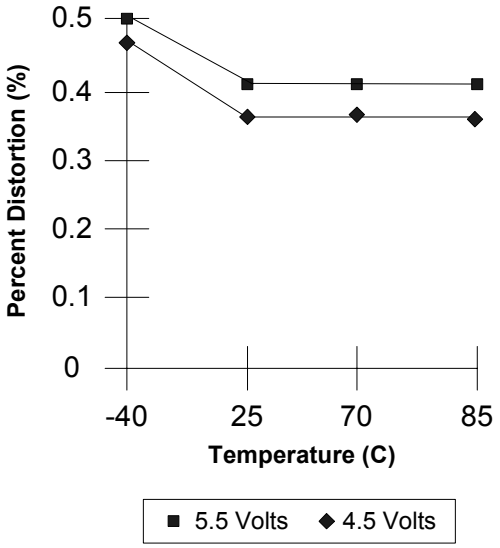

Chart 4: Oscillator Stability

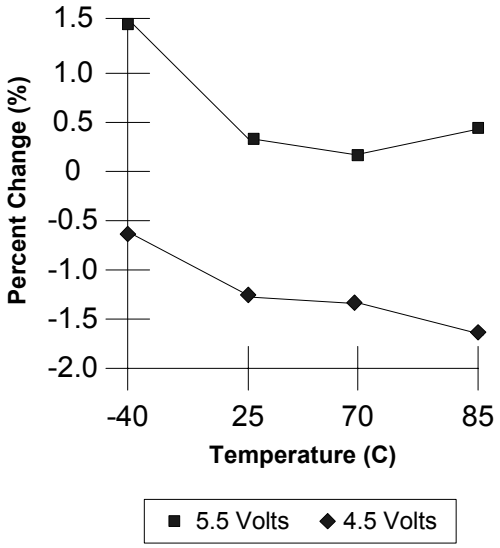

9.2. PARAMETERS FOR DIE

TABLE 10: DC PARAMETERS

PARAMETERS	SYMBOLS	MIN[2]	TYP[1]	MAX[2]	UNITS	CONDITIONS
Input Low Voltage	V_{IL}			0.8	V	
Input High Voltage	V_{IH}	2.4			V	
Output Low Voltage	V_{OL}			0.4	V	I_{OL} = 4.0 mA
Output High Voltage	V_{OH}	2.4			V	I_{OH} = -1.6 mA
V_{CC} Current (Operating)	I_{CC}		15	30	mA	V_{CC} = 5.5V[3], $R_{EXT} = \infty$
V_{CC} Current (Standby)	I_{SB}		0.5	10	µA	[3] [4]
Input Leakage Current	I_{IL}			±1	µA	
Input Current HIGH w/Pull Down	I_{ILPD}			130	µA	Force V_{CC} [5]
Output Load Impedance	R_{EXT}	16			Ω	Speaker Load
Preamp IN Input Resistance	R_{MIC}	4	9	17	KΩ	Pads 17,18
ANA IN Input Resistance	$R_{ANA\ IN}$	2.5	3	5	KΩ	
Preamp Gain 1	A_{PRE1}	20	23	26	dB	AGC = 0.0V
Preamp Gain 2	A_{PRE2}		-45	-15	dB	AGC = 2.5V
ANA IN to SP+/- Gain	A_{ARP}	20	22	25	dB	
AGC Output Resistance	R_{AGC}	2.5	5	9.5	KΩ	
Preamp Out Source	I_{PREH}		-2		mA	@ V_{OUT} = 1.0V
Preamp In Sink	I_{PREL}		0.5		mA	@ V_{OUT} = 2.0V

[1] Typical values @ T_A = 25° and 5.0V.

[2] All Min/Max limits are guaranteed by Winbond via electronical testing or characterization. Not all specifications are 100 percent tested.

[3] V_{CCA} and V_{CCD} connected together.

[4] $\overline{REC}$, $\overline{PLAYL}$, and $\overline{PLAYE}$ must be at V_{CCD}.

[5] XCLK pin.

TABLE 11: AC PARAMETERS

CHARACTERISTICS	SYMBOLS	MIN[2]	TYP[1]	MAX[2]	UNITS	CONDITIONS
Sampling Frequency	F_S					
ISD1416			8.0		kHz	[5]
ISD1420			6.4		kHz	[5]
Filter Pass Band	F_{CF}					
ISD1416			3.3		kHz	3 dB Roll-Off Point[3][6]
ISD1420			2.6		kHz	3 dB Roll-Off Point[3][6]
Record Duration	T_{REC}					
ISD1416		16			sec	
ISD1420		20			sec	
Playback Duration	T_{PLAY}					
ISD1416		16			sec	
ISD1420		20			sec	
$\overline{\text{RECLED}}$ ON Delay	T_{LED1}		5		msec	
$\overline{\text{RECLED}}$ OFF Delay	T_{LED2}					
ISD1416		30	38.9	95	msec	
ISD1420		40	48.6	110	msec	
Address Setup Time	T_{SET}	300			nsec	
Address Hold Time	T_{HOLD}	0			nsec	
Power-Up Delay	T_{RPUD}					
ISD1416			26		msec	
ISD1420			32		msec	
PD Pulse Width (Record)	T_{RPUD}					
ISD1416			26		msec	
ISD1420			32		msec	
PD Pulse Width (Play)	T_{PPUD}					
ISD1416			6.5		msec	
ISD1420			8.1		msec	
Play Power-Down Delay	T_{PPDD}					
ISD1416			6.5		msec	
ISD1420			8.1		msec	

CHARACTERISTICS	SYMBOLS	MIN[2]	TYP[1]	MAX[2]	UNITS	CONDITIONS
$\overline{EOM}$ Pulse Width ISD1416 ISD1420	T_{EOM}		 12.5 15.625		 msec msec	
Total Harmonic Distortion	THD		1	3	%	@ 1 kHz
Speaker Output Power	P_{OUT}		12.2		mW	R_{EXT} = 16 Ω[4]
Voltage Across Speaker Pins	V_{OUT}		1.25	2.5	V p-p	R_{EXT} = 600 Ω
MIC Input Voltage	V_{IN1}			20	mV	Peak-to-Peak[4]
ANA IN Input Voltage	V_{IN2}			50	mV	Peak-to-Peak

Notes:

[1] Typical values @ T_A = 25º and 5.0V.

[2] All Min/Max limits are guaranteed by Winbond via electronical testing or characterization. Not all specifications are 100 percent tested.

[3] Low-frequency cutoff depends upon the value of external capacitors (see Pin Descriptions)

[4] With 5.1 K Ω series resistor at ANA IN.

[5] Sampling Frequency and playback duration can vary as much as ±2.25 percent over the commercial temperature and voltage rangs. It may vary as much as ±5 percent over the industrial temperature and voltage ranges. All devices will meet the maximum sampling frequency and minimum playback duration parameters. For greater stability, an external clock can be utilized (see Pin Descriptions)

[6] Filter specification applies to the anti-aliasing filter and the smoothing filter. Typical Parameter Variation with Voltage and Temperature. This parameter is not checked during production testing and may vary due to process variations and other factors. Therefore, the customer should not rely upon this value for testing purposes.

9.2.1. Typical Parameter Variation with Voltage and Temperature

Chart 5: Record Mode Operating Current (I_{CC})

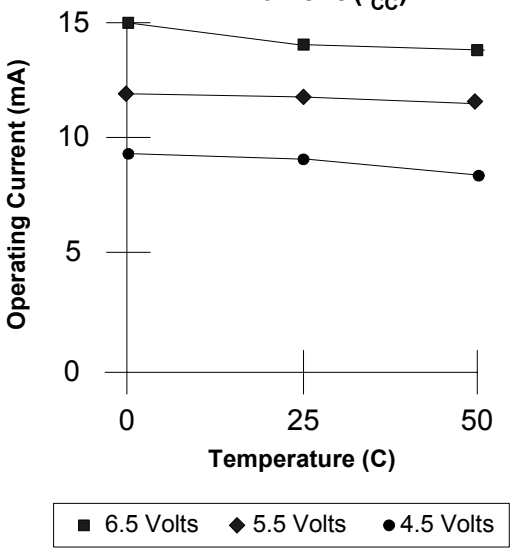

Chart 7: Standby Current (I_{SB})

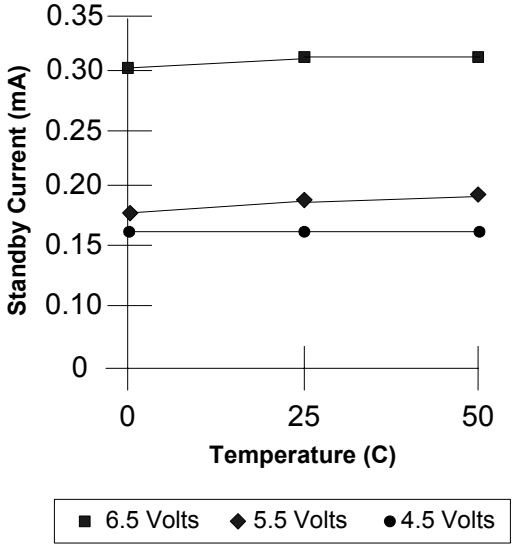

Chart 6: Total Harmonic Distortion

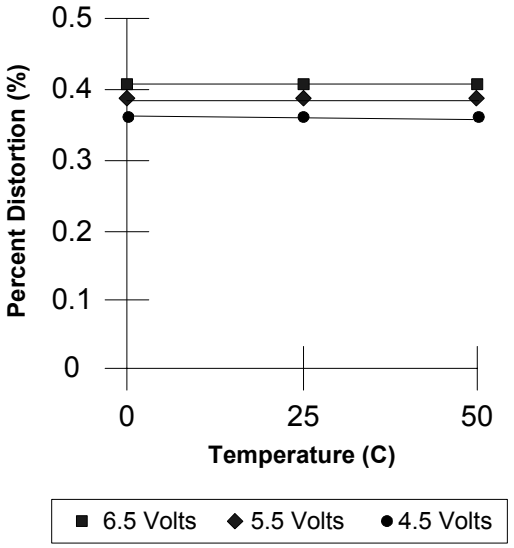

Chart 8: Oscillator Stability

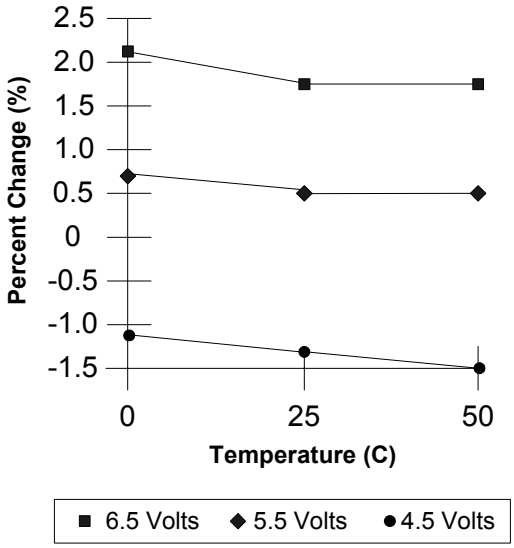

10. TYPICAL APPLICATION CIRCUIT

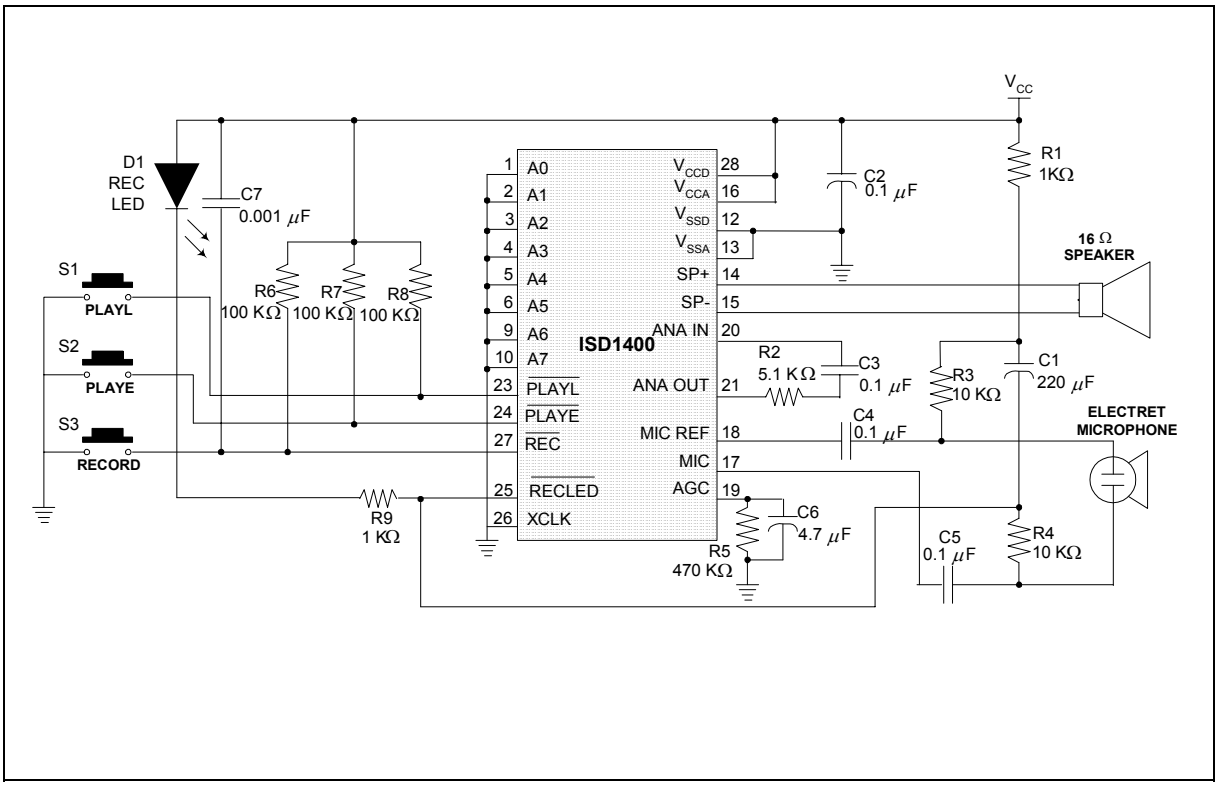

FIGURE 5: DESIGN SCHEMATIC

Functional Description Example

The following operating examples demonstrate the functionality of the ISD1400 series.

1. Record a message:

   Pulling the $\overline{REC}$ signal LOW initiates a record cycle from current location. When $\overline{REC}$ is held LOW, the recording continues. Until the memory array is filled up or when $\overline{REC}$ is pulled HIGH, recording ceases. An EOM marker is written at the end of message. Then the device will automatically power down.

2. Edge-activated playback:

   Pulling the $\overline{PLAYE}$ signal LOW initiates a playback cycle from the beginning of the message until the entire message is played. The rising edge of $\overline{PLAYE}$ has no effect on operation. When the EOM marker is encountered, the device automatically powers down. A subsequent falling edge on $\overline{PLAYE}$ initiates a new playback operation from the beginning of the message.

3. Level-activated playback:

   Holding the $\overline{PLAYL}$ signal LOW initiates a playback cycle from the beginning of the message, until $\overline{PLAYL}$ is pulled HIGH or when the EOM marker is encountered, playback operation stops and the device automatically powers down.

4. Record (interrupting playback).

   The $\overline{REC}$ signal takes precedence over playback operation. Holding $\overline{REC}$ LOW initiates a new record operation from current location, regardless of any current operation in progress.

5. $\overline{RECLED}$ operation.

   During record, the $\overline{RECLED}$ output pin provides an active-LOW signal, which can be used to drive an LED as a “record-in-progress” indicator. It returns to a HIGH state when the $\overline{REC}$ pin is pulled HIGH or when the recording is completed due to the memory being filled. However, during playback, this pin also pulses LOW to indicate an EOM at the end of a message.

Applications Note

Some users may experience an unexpected recording taking place when their circuit is powered up, or the batteries are changed and V_{CC} rises faster than $\overline{REC}$. This undesired recording prevents playback of the previously recorded message. A spurious End Of Message (EOM) marker appears at the very beginning of the memory, preventing access to the original message, and nothing is played.

To prevent this occurrence, place a capacitor (approx. 0.001 µF) between the control pin ($\overline{REC}$) and V_{CC}. This pulls the control pin voltage up with V_{CC} as it rises. Once the voltage is HIGH, the pull-up device will keep the pin HIGH until intentionally pulled LOW, preventing the false EOM marker.

Since this anomaly depends on factors such as the capacitance of the user's printed circuit board, not all circuit designs will exhibit the spurious marker. However, it is recommended that the capacitor is included for design reliability. A more detailed explanation and resolution of this occurrence is described in Application Information.

11. PACKAGE DRAWING AND DIMENSIONS

11.1. 28-LEAD 300 MIL PLASTIC SMALL OUTLINE IC (SOIC)

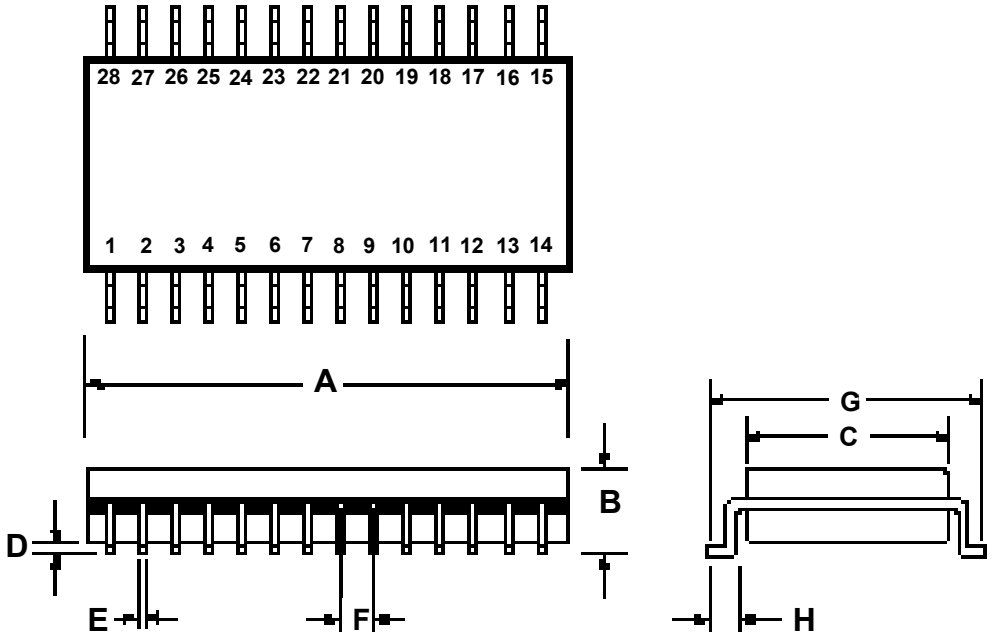

	INCHES			MILLIMETERS		
	Min	Nom	Max	Min	Nom	Max
A	0.701	0.706	0.711	17.81	17.93	18.06
B	0.097	0.101	0.104	2.46	2.56	2.64
C	0.292	0.296	0.299	7.42	7.52	7.59
D	0.005	0.009	0.0115	0.127	0.22	0.29
E	0.014	0.016	0.019	0.35	0.41	0.48
F		0.050			1.27	
G	0.400	0.406	0.410	10.16	10.31	10.41
H	0.024	0.032	0.040	0.61	0.81	1.02

Note: Lead coplanarity to be within 0.004 inches.

11.2. 28-LEAD 600 MIL PLASTIC DUAL INLINE PACKAGE (PDIP)

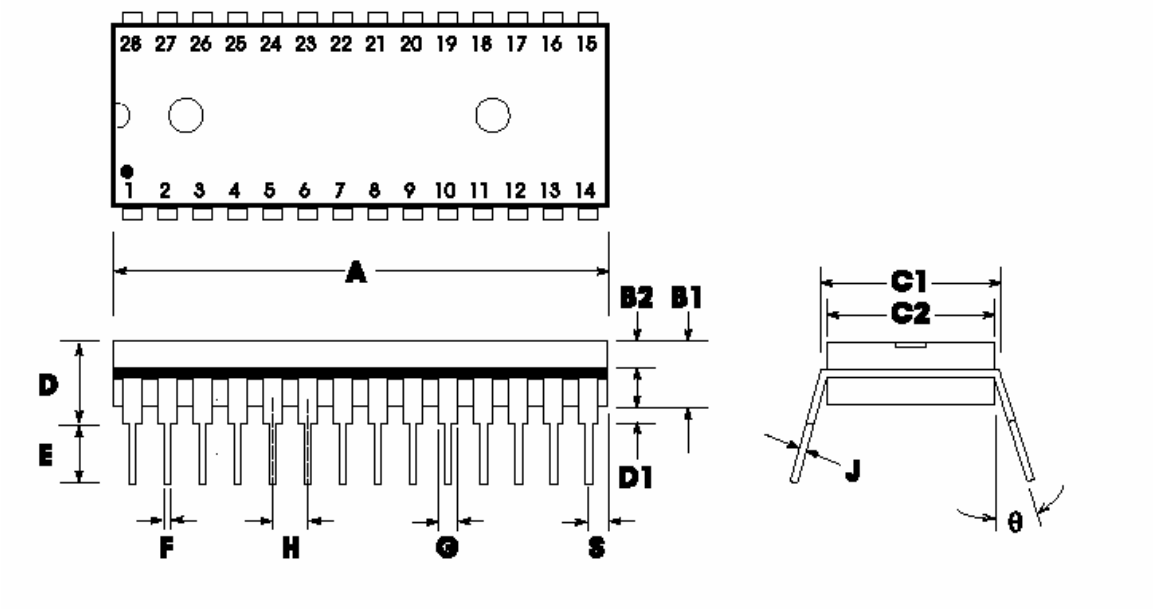

	INCHES			MILLIMETERS		
	Min	Nom	Max	Min	Nom	Max
A	1.445	1.450	1.455	36.70	36.83	36.96
B1		0.150			3.81	
B2	0.065	0.070	0.075	1.65	1.78	1.91
C1	0.600		0.625	15.24		15.88
C2	0.530	0.540	0.550	13.46	13.72	13.97
D			0.19			4.83
D1	0.015			0.38		
E	0.125		0.135	3.18		3.43
F	0.015	0.018	0.022	0.38	0.46	0.56
G	0.055	0.060	0.065	1.40	1.52	1.62
H		0.100			2.54	
J	0.008	0.010	0.012	0.20	0.25	0.30
S	0.070	0.075	0.080	1.78	1.91	2.03
q	0°		15°	0°		15°

11.3. DIE PHYSICAL LAYOUT [1]

ISD1400x

- Die Dimensions
  X: 172.2 ± 1 mils
  Y: 168.5 ± 1 mils
- Die Thickness[2]
  17.5 ± 1 mils
- Pad Opening
  100 x 112 microns
  3.9 x 4.4 mils

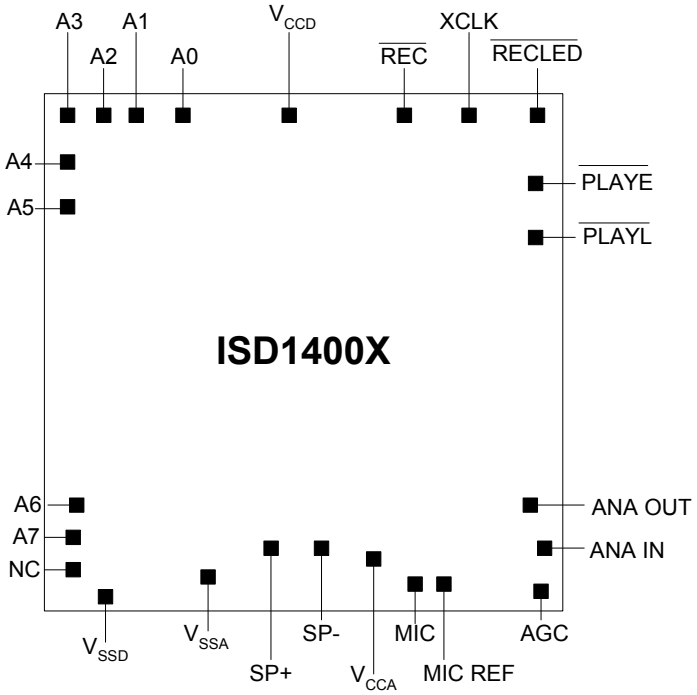

Notes:

[1] The backside of die is internally connected to V_{SS}. It **MUST NOT** be connected to any other potential or damage may occur.

[2] Die thickness is subject to change, please contact Winbond factory for status and availability.

ISD1400 SERIES PAD DESIGNATIONS

(with respect to die center)

Pad	Pad Name	X Axis (µm)	Y Axis (µm)
A0	Address 0	-1332.5	1973.8
A1	Address 1	-1628.9	1973.8
A2	Address 2	-1808.9	1973.8
A3	Address 3	-2014.1	1910.2
A4	Address 4	-2014.1	1722.6
A5	Address 5	-2014.1	1519.8
A6	Address 6	-2014.1	-1214.6
A7	Address 7	-2014.1	-1399.8
NC	No Connect	-2014.1	-1745.4
V_{SSD}	Digital Ground	-1894.1	-1971.8
V_{SSA}	Analog Ground	-358.1	-1971.8
SP+	Speaker Output +	-17.7	-1896.6
SP-	Speaker Output -	411.9	-1896.6
V_{CCA}	Analog Power Supply	779.5	-1936.2
MIC	Microphone Input	991.5	-1973.8
MIC REF	Microphone Reference	1168.7	-1973.8
AGC	Automatic Gain Control	1977.9	-1910.6
ANA IN	Analog Input	2005.1	-1580.2
ANA OUT	Analog Output	1990.7	-1379.0
$\overline{PLAYL}$	Level-Activated Playback	2013.9	1608.6
$\overline{PLAYE}$	Edge-Activated Playback	2013.9	1777.0
$\overline{RECLED}$	Record LED Output	2011.9	1971.8
XCLK	External Clock	1580.7	1973.8
$\overline{REC}$	Record	752.3	1973.8
V_{CCD}	Digital Power Supply	-48.5	1929.4

Note: Die dimensions and pad positions may be subjected to change. Please contact Winbond Sales Offices or Representatives to verify current or future specifications.

12. ORDERING INFORMATION

Product Number Descriptor Key

ISD14

ISD1400 Series

Duration:
16 = 16 seconds
20 = 20 seconds

Special Temperature Field:
Blank = Commercial Packaged (0˚C to +70˚)
or Commercial Die (0˚C to +50˚)
I = Industrial (-40˚C to +85˚)

Leaded or Lead-Free Type:
Blank = Leaded
Y = Lead-Free

Package Type:
X = Die
P = 28-Lead 600 mil Plastic Dual Inline Package (PDIP)
S = 28-Lead 300 mil Small Outline Package (SOIC)

When ordering the devices, please refer to the following valid order numbers. For the shaded part numbers, please contact the local Winbond Sales Representatives for availability information.

Type	Duration	16-Second		20-Second	
	Package	Part #	Order #	Part #	Order #
Leaded	Die	ISD1416X C5006	I1416X5006	ISD1420X C5006	I1420X5006
	PDIP	ISD1416P C5006	I1416P5006	ISD1420P C5006	I1420P5006
		ISD1416PI C5006	I1416PI5006	ISD1420PI C5006	I1420PI5006
	SOIC	ISD1416S C5006	I1416S5006	ISD1420S C5006	I1420S5006
		ISD1416SI C5006	I1416SI5006	ISD1420SI C5006	I1420SI5006
Lead-Free	PDIP	ISD1416PY	I1416PY	ISD1420PY	I1420PY
		ISD1416PYI	I1416PYI	ISD1420PYI	I1420PYI
	SOIC	ISD1416SY	I1416SY	ISD1420SY	I1420SY
		ISD1416SYI	I1416SYI	ISD1420SYI	I1420SYI

For the latest product information, access Winbond's worldwide website at http://www.winbond-usa.com

13. VERSION HISTORY

VERSION	DATE	DESCRIPTION
0	Before 2004	Initial issue.
1.0	March 2004	Reformat the document. Revise footnote for Filter Passband in Tables 1, 9 & 11. Revise Functional Description Example section. Revise die picture. Revise ordering information.
1.1	Apr 2005	Revise the disclaim section.
1.2	Jun 2005	Revise the part number for I1420 device in Ordering section.
1.3	Nov 2005	Add Pb-free info

Winbond products are not designed, intended, authorized or warranted for use as components in systems or equipment intended for surgical implantation, atomic energy control instruments, airplane or spaceship instruments, transportation instruments, traffic signal instruments, combustion control instruments, or for other applications intended to support or sustain life. Furthermore, Winbond products are not intended for applications wherein failure of Winbond products could result or lead to a situation wherein personal injury, death or severe property or environmental damage could occur.

Winbond customers using or selling these products for use in such applications do so at their own risk and agree to fully indemnify Winbond for any damages resulting from such improper use or sales.

The contents of this document are provided only as a guide for the applications of Winbond products. Winbond makes no representation or warranties with respect to the accuracy or completeness of the contents of this publication and reserves the right to discontinue or make changes to specifications and product descriptions at any time without notice. No license, whether express or implied, to any intellectual property or other right of Winbond or others is granted by this publication. Except as set forth in Winbond's Standard Terms and Conditions of Sale, Winbond assumes no liability whatsoever and disclaims any express or implied warranty of merchantability, fitness for a particular purpose or infringement of any Intellectual property.

The contents of this document are provided "AS IS", and Winbond assumes no liability whatsoever and disclaims any express or implied warranty of merchantability, fitness for a particular purpose or infringement of any Intellectual property. In no event, shall Winbond be liable for any damages whatsoever (including, without limitation, damages for loss of profits, business interruption, loss of information) arising out of the use of or inability to use the contents of this documents, even if Winbond has been advised of the possibility of such damages.

Application examples and alternative uses of any integrated circuit contained in this publication are for illustration only and Winbond makes no representation or warranty that such applications shall be suitable for the use specified.

The 100-year retention and 100K record cycle projections are based upon accelerated reliability tests, as published in the Winbond Reliability Report, and are neither warranted nor guaranteed by Winbond. This product incorporates SuperFlash®.

Information contained in this ISD® ChipCorder® datasheet supersedes all data for the ISD ChipCorder products published by ISD® prior to August, 1998.

This datasheet and any future addendum to this datasheet is(are) the complete and controlling ISD® ChipCorder® product specifications. In the event any inconsistencies exist between the information in this and other product documentation, or in the event that other product documentation contains information in addition to the information in this, the information contained herein supersedes and governs such other information in its entirety. This datasheet is subject to change without notice.

Copyright© 2005, Winbond Electronics Corporation. All rights reserved. ChipCorder® and ISD® are trademarks of Winbond Electronics Corporation. SuperFlash® is the trademark of Silicon Storage Technology, Inc. All other trademarks are properties of their respective owners.

Headquarters
No. 4, Creation Rd. III
Science-Based Industrial Park,
Hsinchu, Taiwan
TEL: 886-3-5770066
FAX: 886-3-5665577
http://www.winbond.com.tw/

Winbond Electronics Corporation America
2727 North First Street, San Jose,
CA 95134, U.S.A.
TEL: 1-408-9436666
FAX: 1-408-5441797
http://www.winbond-usa.com/

Winbond Electronics (Shanghai) Ltd.
27F, 299 Yan An W. Rd. Shanghai,
200336 China
TEL: 86-21-62365999
FAX: 86-21-62356998

Taipei Office
9F, No. 480, Pueiguang Rd.
Neihu District
Taipei, 114 Taiwan
TEL: 886-2-81777168
FAX: 886-2-87153579

Winbond Electronics Corporation Japan
7F Daini-ueno BLDG. 3-7-18
Shinyokohama Kohokuku,
Yokohama, 222-0033
TEL: 81-45-4781881
FAX: 81-45-4781800

Winbond Electronics (H.K.) Ltd.
Unit 9-15, 22F, Millennium City,
No. 378 Kwun Tong Rd.,
Kowloon, Hong Kong
TEL: 852-27513100
FAX: 852-27552064

НИОКР СИСТЕМС

ООО «НИОКРсистемс» - это оперативные поставки широкого спектра электронных компонентов отечественного и импортного производства напрямую от производителей и с крупнейших мировых складов. Реализуемая нашей компанией продукция насчитывает более полумиллиона наименований.

Благодаря этому наша компания предлагает к поставке практически не ограниченный ассортимент компонентов как оптовыми, мелкооптовыми партиями, так и в розницу.

Благодаря развитой сети поставщиков, помогаем в поиске и приобретении экзотичных или снятых с производства компонентов.

Наша компания это:

- Гарантия качества поставляемой продукции
- Широкий ассортимент
- Минимальные сроки поставок
- Техническая поддержка
- Подбор комплектации
- Индивидуальный подход
- Гибкое ценообразование
- Работаем по 275 ФЗ

ООО «НИОКР СИТЕМС»
Москва, 125362, Россия, ул. Вишневая, д. 9, к. 1, Блок 104 а и 104 в

Телефон: 8 (495) 268-14-82
Email: n@nsistems.ru

ИНН: 7735154786
ОГРН: 1167746717709