# PRECISION SINGLE CELL TIMER

# ZSCT1555

**ISSUE 2 - MAY 1998**

## DEVICE DESCRIPTION

These devices are precision timing circuits for generation of accurate time delays or oscillation. Advanced circuit design means that these devices can operate from a single battery cell with the minimum of quiescent current.

In monostable mode time delays are controlled by a single resistor and capacitor network. In astable mode the frequency and duty cycle can be accurately and independently controlled with two external resistors and one capacitor.

The threshold and trigger levels are normally set as a proportion of $V_{CC}$ by internal resistors. These levels can be programmed by the use of the control input pin.

When the trigger input reduces to a value below the trigger level, the flip-flop is set and the output goes high. With the trigger input above the trigger level and the threshold input above the threshold level, the flip-flop is reset and the output goes low. The reset pin has priority over all the other inputs and is used to start new timing cycles. A low on the reset input causes the flip-flop to reset forcing the output low. Whenever the output is forced low then the internal discharge transistor is turned on.

## FEATURES

- 0.9V supply operating voltage guaranteed
- Pin connections comparable with 555 series timers
- Very low quiescent current 74 µA
- SO8 and DIL8 packages
- Operating temperature range compatible with battery technologies

## APPLICATIONS

- Portable and battery powered equipment
- Low voltage and low power systems

## SCHEMATIC DIAGRAM

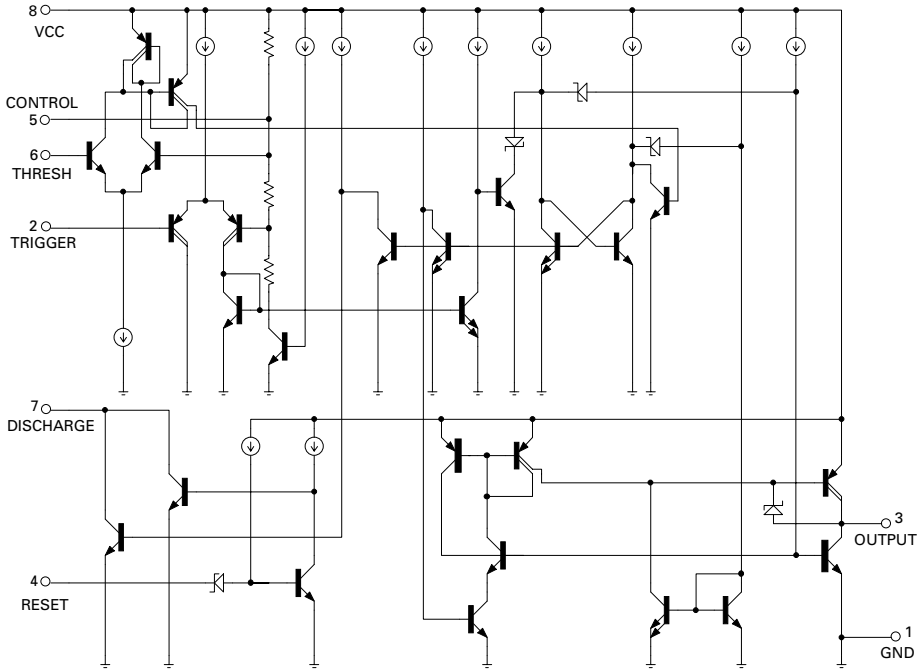

# ZSCT1555

## ABSOLUTE MAXIMUM RATINGS

| | |
|---|---|
| Supply Voltage | 9V |
| Input Voltages (Cont, Reset, Thres, Trig) | 9V |
| Output Current | 100mA |
| Operating Temperature | -20 to 100°C |
| Storage Temperature | -55 to 150°C |

**Power Dissipation ($T_{amb}$=25°C)**

| | |
|---|---|
| DIL8 | 625mW |
| SO8 | 625mW |

**Recommended Operating Conditions**

| | | |
|---|---|---|
| Supply Voltage | 0.9V(min) | 6V(max) |
| Input Voltages (Cont, Reset, Thres, Trig) | | 6V(max) |
| Output Current | Sink | 100mA(max) |
| | Source | 150µA(max) |

## ELECTRICAL CHARACTERISTICS
## TEST CONDITIONS (Unless otherwise stated):$T_{amb}$= 25°C,$V_{CC}$= 1.5V

| SYMBOL | PARAMETER | CONDITIONS | LIMITS | | | UNITS |
|---|---|---|---|---|---|---|
| | | | MIN. | TYP. | MAX. | |
| $V_{CC}$ | Supply Voltage | | 0.9 | | 6 | V |
| $I_{CC}$ | Supply Current | no load<br>$V_{CC}$= 5V, no load | | 74<br>150 | 120<br>200 | mA |
| $V_{TH}$ | Threshold Voltage | <br>$V_{CC}$= 5V | 1.195<br>3.9 | 1.22<br>4 | 1.245<br>4.1 | V |
| $I_{TH}$ | Threshold Current (Note 1) | | 0 | 20 | 100 | nA |
| $V_{TR}$ | Trigger Voltage | <br>$V_{CC}$= 5V | 0.2<br>0.57 | 0.25<br>0.62 | 0.3<br>0.67 | V |
| $I_{TR}$ | Trigger Current | | 0 | -35 | -100 | nA |
| $t_{PD}$ | Trigger Propagation delay | Delay from trigger to output | | 2 | | µs |
| $V_{RS}$ | Reset Voltage | | 0.1 | 0.2 | 0.4 | V |
| $I_{RS}$ | Reset Current | Reset @ 0V | 0 | -5 | -10 | µA |
| $I_{DS}$ | Discharge switch Off-state current | | 0 | 10 | 100 | nA |
| $V_{DS}$ | Discharge switch On-state voltage | $I_{DS}$= 0.2mA<br>$V_{CC}$= 5V, $I_{DS}$= 0.3mA | 0<br>0 | 180<br>240 | 225<br>350 | mV |
| $V_{CT}$ | Control Voltage (Open Circuit) | <br>$V_{CC}$= 5V | 1.195<br>3.9 | 1.22<br>4 | 1.245<br>4.1 | V |
| $V_{OL}$ | Output Voltage (Low) | $I_{OL}$=10mA<br>$I_{OL}$=50mA<br>$V_{CC}$=5V, $I_{OL}$=10mA<br>$V_{CC}$=5V, $I_{OL}$=100mA | 0<br>0<br>0<br>0 | 0.15<br>0.45<br>0.13<br>0.65 | 0.3<br>0.65<br>0.3<br>1 | V |
| $V_{OH}$ | Output Voltage (High) | $I_{OH}$= 100µA<br>$V_{CC}$= 5V, $I_{OH}$= 150µA | 1<br>4.5 | 1.1<br>4.6 | 1.5<br>5 | V |

**ELECTRICAL CHARACTERISTICS (Continued)**
**TEST CONDITIONS (Unless otherwise stated):$T_{amb}$=25°C,$V_{CC}$=1.5V**

| SYMBOL | PARAMETER | CONDITIONS | LIMITS | | | UNITS |
|---|---|---|---|---|---|---|
| | | | MIN. | TYP. | MAX. | |
| $t_R$ | Output pulse rise time | $C_L$= 10pF<br>$V_{CC}$=5V, $C_L$=10pF | | 1.6<br>1.2 | | µs |
| $t_F$ | Output pulse fall time | $C_L$= 10pF<br>$V_{CC}$=5V, $C_L$=10pF | | 240<br>24 | | ns |
| $\Delta t_{IA}(m)$<br>$\Delta t_V(m)$<br>$\Delta t_T(m)$ | Timing error, Monostable<br>Initial accuracy (Note 2)<br>Drift with supply voltage<br>Drift with temperature | RA= 10 to 50 kΩ<br>RB= 10 to 50 kΩ<br>$C_T$ = 68nF | | 1.6<br>0.262<br>100 | | %<br>%/V<br>ppm/°C |
| $\Delta t_{IA}(a)$<br>$\Delta t_V(a)$<br>$\Delta t_T(a)$ | Timing error, Astable<br>Initial accuracy (Note 2)<br>Drift with supply voltage<br>Drift with temperature | RA= 10 to 50 kΩ<br>RB= 10 to 50 kΩ<br>$C_T$ = 68nF | | 4.8<br>0.662<br>150 | | %<br>%/V<br>ppm/°C |
| $f_A$ | Astable maximum frequency | RA=20 kΩ<br>RB= 10 kΩ<br>$C_T$ =47pF | | | 330 | kHz |

Note 1: This will influence the maximum values of RA and RB ($RA_{MAX}$=10MΩ,$RB_{MAX}$=1.5MΩ)

Note 2: Is defined as the difference between the measured value and the average value of a random sample taken on a batch basis

# TYPICAL CHARACTERISTICS

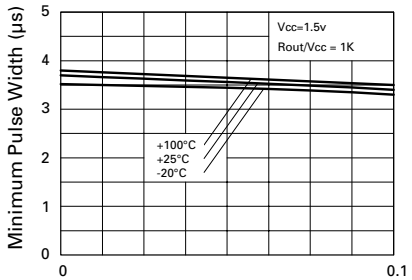


**Minimum Pulse Width Required for Triggering**

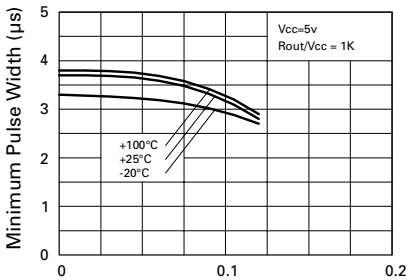


**Minimum Pulse Width Required for Triggering**

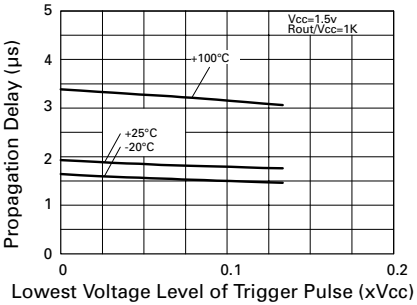


**Output Propagation Delay**

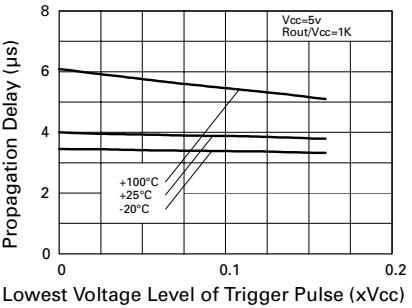


**Output Propagation Delay**

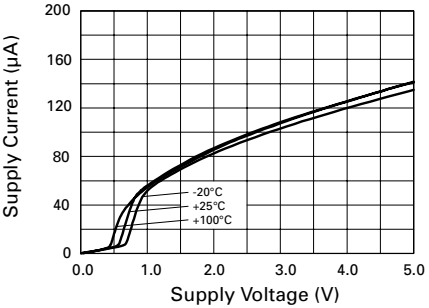


**Supply Current v Supply Voltage**

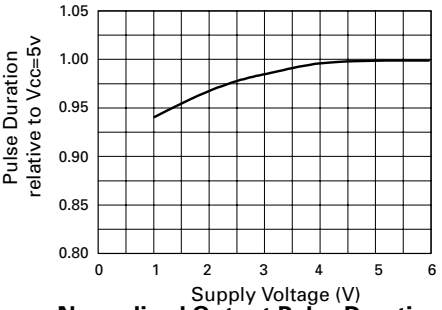


**Normalized Output Pulse Duration v Supply Voltage**

# TYPICAL CHARACTERISTICS

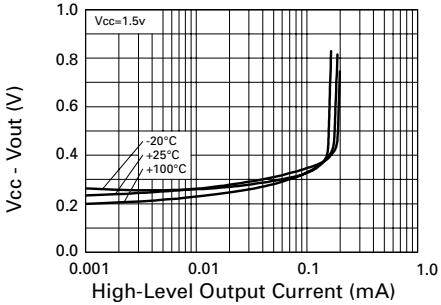


**Output High Voltage Drop v Output Current**

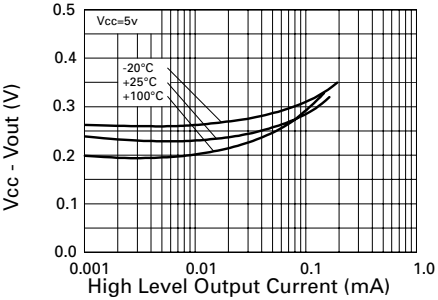


**Output High Voltage Drop v Output Current**

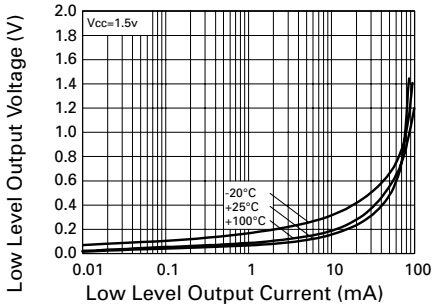


**Output Low Voltage Drop v Output Current**

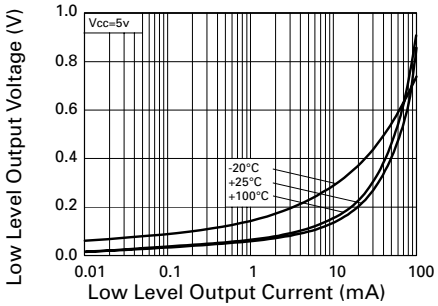


**Output Low Voltage Drop v Output Current**

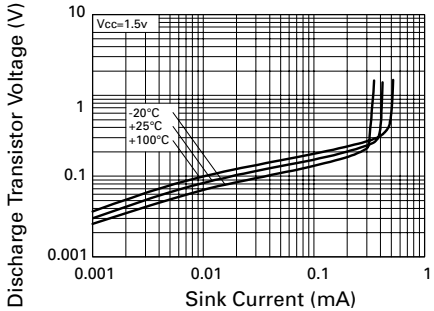


**Discharge Transistor Voltage v Sink Current**

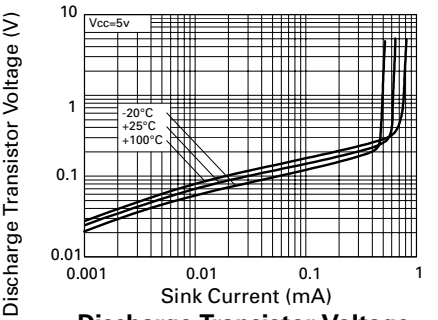


**Discharge Transistor Voltage v Sink Current**

# ZSCT1555

## FUNCTIONAL DIAGRAM

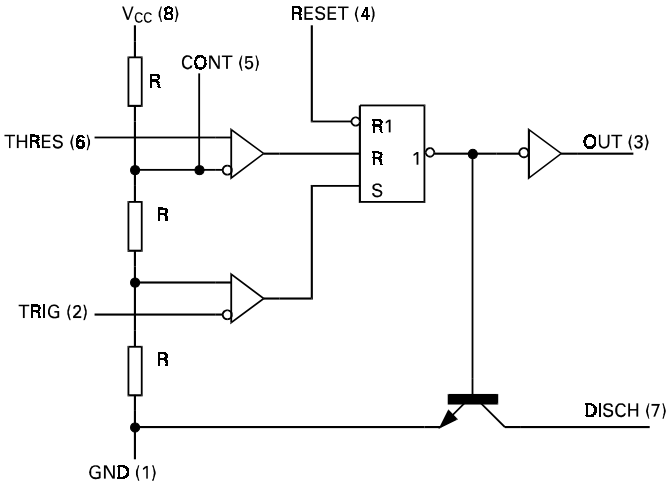


## FUNCTIONAL TABLE

| RESET | TRIGGER VALUE | THRESHOLD VOLTAGE | OUTPUT | DISCHARGE SWITCH |
|---|---|---|---|---|
| Low | N/A | N/A | Low | On |
| High | $<V_{CC}/5$ | N/A | High | Off |
| High | $>V_{CC}/5$ | $>4V_{CC}/5$ | Low | On |
| High | $>V_{CC}/5$ | $<4V_{CC}/5$ | As Previously established | |

## POWER DERATING TABLE

| Package | TA≤25°C Power Rating | Derating Factor Above TA=25°C | $T_A$=70°C Power Rating | $T_A$=85°C Power Rating |
|---|---|---|---|---|
| N8 | 625mW | 6.25mW/°C | 330mW | 250mW |
| D8 | 625mW | 6.25mW/°C | 330mW | 250mW |

## APPLICATIONS INFORMATION

Many configurations of the ZSCT1555 are possible. The following gives a selection of a few of these using the most basic monostable and astable connections. The final application example in astable mode shows the device optimum use for low voltage and power economy in a single cell boost converter.

## Monostable Operation

Figure 1 shows connection of the timer as a one-shot whose pulse period is independent of supply voltage. Initially the capacitor is held discharged. The application of a negative going trigger pulse sets an internal flip flop which allows the capacitor to start to charge up via RA and forces the output high. The voltage on the capacitor increases for time t, where $t = 1.63RAC_T$, at the end of this period the voltage on the capacitor is $0.8\ V_{CC}$. At this point the flip flop resets, the capacitor is discharged and the output is driven low.

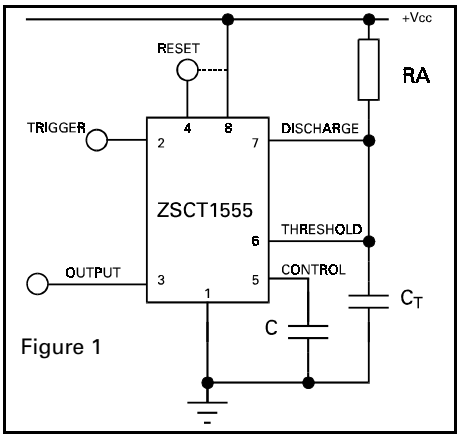

Figure 1

Figure 2 shows the timing diagram for this function. During the output high period further trigger pulses are locked out however the circuit can be reset by application of a negative going pulse on the reset pin. Once the output is driven low it remains in this state until the application of the next trigger pulse. If the reset function is not used then it is recommended to connect to $V_{CC}$ to eliminate any possibility of false triggering.

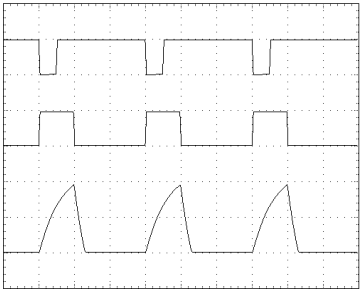
Figure 2

Figure 3 gives an easy selection of RA and $C_T$ values for various time delays.

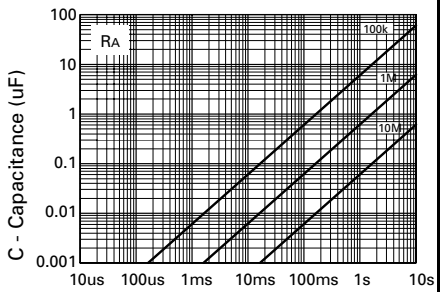

Figure 3

This configuration of circuit can be used as a frequency divider by adjusting the timing period. Figure 4 indicates a divide by three.

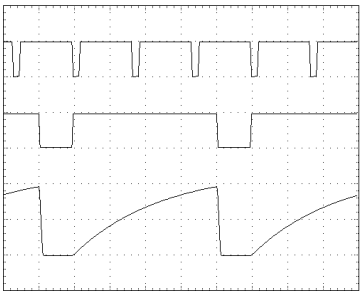
Figure 4

Figure 5 shows the monostable mode used as a pulse width modulator. Here the trigger pin is supplied with a continuous pulse train, the resulting output pulse width is modulated by a signal applied to the control pin.

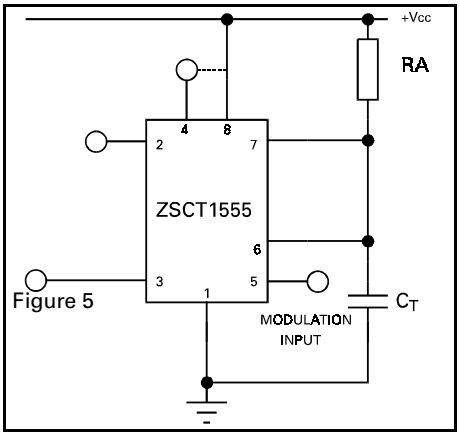


Figure 5

Figure 6 shows typical waveform examples.

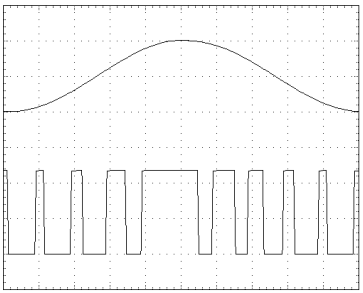

Figure 6

## Astable operation

The configuration of Figure 7 produces a free running multivibrator circuit whose frequency is independent of supply voltage. The ratio of resistors RA and RB precisely sets the circuit duty cycle. The capacitor is charged and discharged between thresholds at $0.2V_{CC}$ and $0.8V_{CC}$. Oscillation frequency (f) and duty cycle (d) can be calculated using the following equations:-

$f = 0.62/(RA + 2RB)C_T$

$d = RB/(RA + 2RB)$

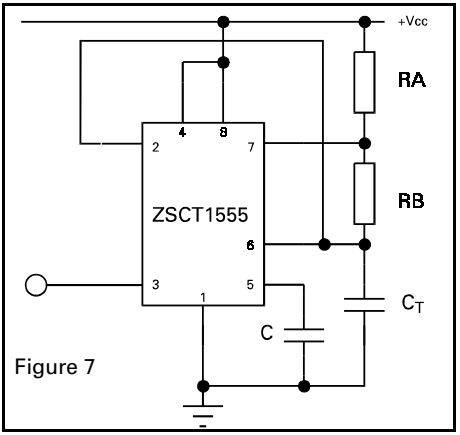


Figure 7

Figure 8 shows the waveforms generated in this mode of operation.

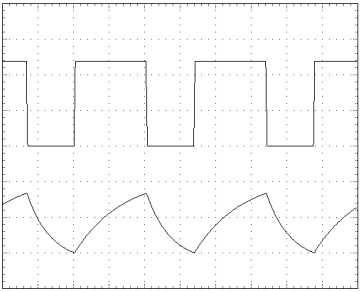

Figure 8

Figure 9 gives an easy selection for RA, RB and $C_T$ values.

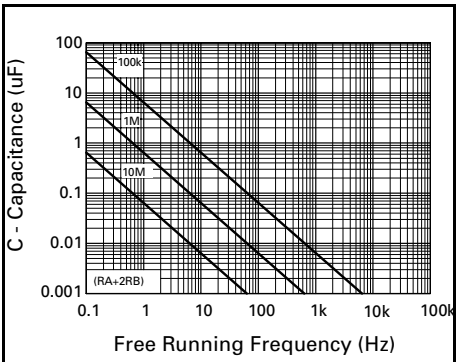


Figure 9

Similar to the PWM circuit of Figure 5 the astable circuit can be configured with modulation of the control input as shown in Figure 10. The result is a pulse position modulated, PPM, circuit where the pulse position is altered by the control input voltage.

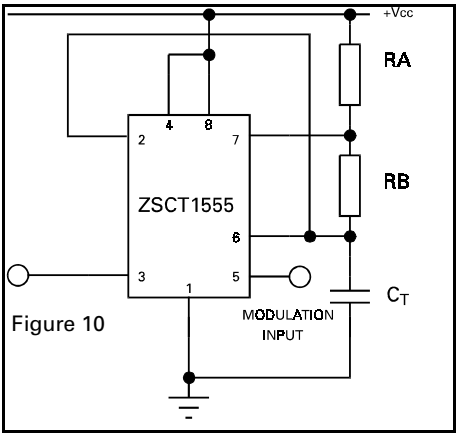


Figure 10

Figure 11 shows the result of modulation with a triangle wave input to the control pin.

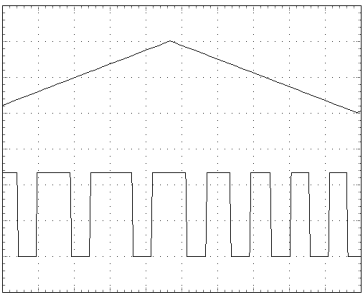

Figure 11

# ZSCT1555

The circuit of Figure 12 shows the device in astable mode operating as part of a single cell boost converter. This circuit generates a 5 volt supply from a single battery cell. The circuit output voltage is maintained down to 0.9 volts input and power economy is optimised for extended battery life.

## CONNECTION DIAGRAM

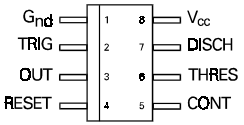


## ORDERING INFORMATION

| Part Number | Package | Part Mark |
|---|---|---|
| ZSCT1555D8 | DIL8 | ZSCT1555 |
| ZSCT1555N8 | SO8 | ZSCT1555 |

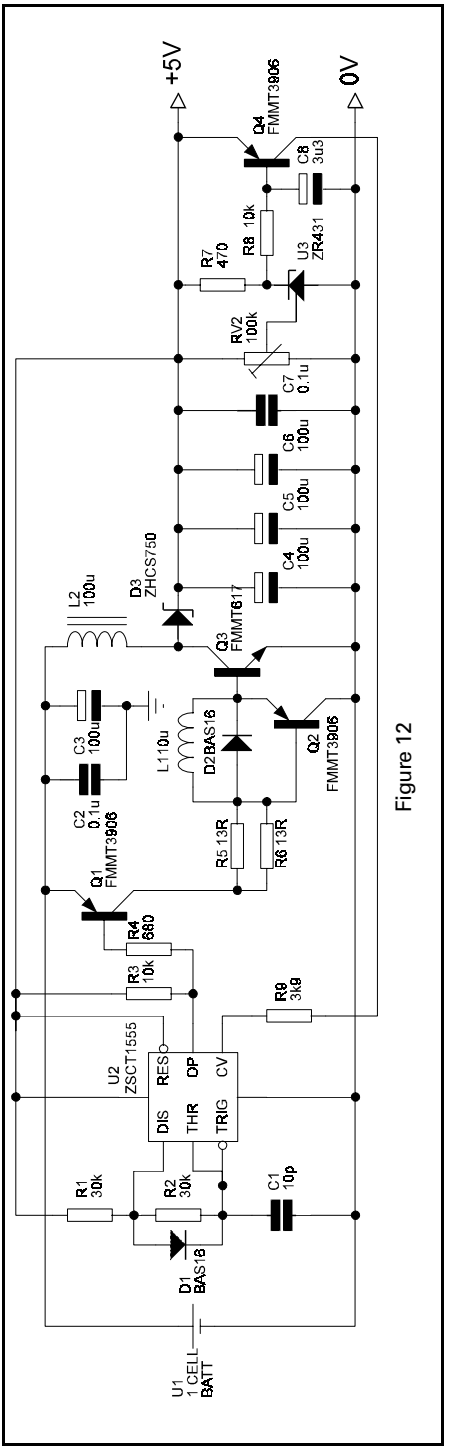


Figure 12

НИОКР СИСТЕМС

**ООО «НИОКРсистемс» -** это оперативные поставки широкого спектра электронных компонентов отечественного и импортного производства напрямую от производителей и с крупнейших мировых складов. Реализуемая нашей компанией продукция насчитывает более полумиллиона наименований.

Благодаря этому наша компания предлагает к поставке практически не ограниченный ассортимент компонентов как оптовыми, мелкооптовыми партиями, так и в розницу.

Благодаря развитой сети поставщиков, помогаем в поиске и приобретении экзотичных или снятых с производства компонентов.

## Наша компания это:

- Гарантия качества поставляемой продукции
- Широкий ассортимент
- Минимальные сроки поставок
- Техническая поддержка
- Подбор комплектации
- Индивидуальный подход
- Гибкое ценообразование
- Работаем по 275 ФЗ

ООО «НИОКР СИТЕМС»
Москва, 125362, Россия, ул. Вишневая, д. 9, к. 1, Блок 104 а и 104 в

Телефон: 8 (495) 268-14-82
Email: n@nsistems.ru

ИНН: 7735154786
ОГРН: 1167746717709