Data Sheet July 2004 FN4997.2

Buck and Synchronous-Rectifier (PWM) Controller and Output Voltage Monitor

The HIP6004E provides complete control and protection for a DC-DC converter optimized for high-performance microprocessor applications. It is designed to drive two N-Channel MOSFETs in a synchronous-rectified buck topology. The HIP6004E integrates all of the control, output adjustment, monitoring and protection functions into a single package.

The output voltage of the converter is easily adjusted and precisely regulated. The HIP6004E includes a 5-input digital-to-analog converter (DAC) that adjusts the output voltage from $1.05V_{DC}$ to $1.825V_{DC}$ in 25mV increments steps. The precision reference and voltage-mode regulator hold the selected output voltage to within ±1% over temperature and line voltage variations.

The HIP6004E provides simple, single feedback loop, voltage-mode control with fast transient response. It includes a 200kHz free-running triangle-wave oscillator that is adjustable from below 50kHz to over 1MHz. The error amplifier features a 15MHz gain-bandwidth product and 6V/µs slew rate which enables high converter bandwidth for fast transient performance. The resulting PWM duty ratio ranges from 0% to 100%.

The HIP6004E monitors the output voltage with a window comparator that tracks the DAC output and issues a Power Good signal when the output is within ±10%. The HIP6004E protects against over-current and overvoltage conditions by inhibiting PWM operation. Additional built-in overvoltage protection triggers an external SCR to crowbar the input supply. The HIP6004E monitors the current by using the $r_{DS(ON)}$ of the upper MOSFET which eliminates the need for a current sensing resistor.

Pinout

HIP6004E
TOP VIEW

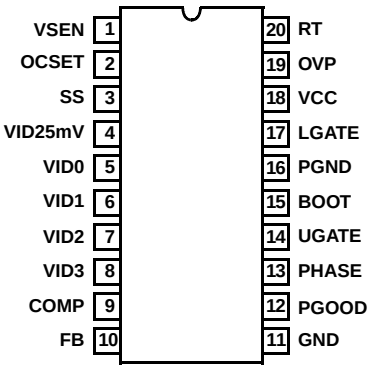

Features

- Drives two N-Channel MOSFETs
- Operates from +5V or +12V Input
- Simple single-loop control design
  - Voltage-mode PWM control
- Fast transient response
  - High-bandwidth error amplifier
  - Full 0% to 100% Duty Ratio
- Excellent output voltage regulation
  - ±1% Over Line Voltage and Temperature
- 5-Bit digital-to-analog output Voltage Selection
  - 25mV binary steps . . . . . $1.05V_{DC}$ to $1.825V_{DC}$
- Power good output voltage monitor
- Overvoltage and overcurrent fault monitors
  - Does not require extra current sensing element, Uses MOSFET's $r_{DS(ON)}$
- Small Converter Size
  - Constant Frequency Operation
  - 200kHz Free-Running Oscillator Programmable from 50kHz to over 1MHz
- Pb-free available

Applications

- VRM8.5 modules for Pentium III and Other Microprocessors
- High-Power DC-DC Regulators
- Low-Voltage Distributed Power Supplies

Related Literature

- Technical Brief TB363 "Guidelines for Handling and Processing Moisture Sensitive Surface Mount Devices (SMDs)"

Ordering Information

PART NUMBER	TEMP. RANGE (°C)	PACKAGE	PKG. DWG. #
HIP6004ECB	0 to 70	20 Ld SOIC	M20.3
HIP6004ECBZ (See Note)	0 to 70	20 Ld SOIC (Pb-free)	M20.3
HIP6004ECV	0 to 70	20 Ld TSSOP	M20.173
HIP6004ECVZ (See Note)	0 to 70	20 Ld TSSOP (Pb-free)	M20.173

*Add "-T" suffix to part number for tape and reel packaging.

NOTE: Intersil Pb-free products employ special Pb-free material sets; molding compounds/die attach materials and 100% matte tin plate termination finish, which is compatible with both SnPb and Pb-free soldering operations. Intersil Pb-free products are MSL classified at Pb-free peak reflow temperatures that meet or exceed the Pb-free requirements of IPC/JEDEC J Std-020B.

CAUTION: These devices are sensitive to electrostatic discharge; follow proper IC Handling Procedures.
1-888-INTERSIL or 321-724-7143 | Intersil (and design) is a registered trademark of Intersil Americas Inc.
Copyright © Intersil Americas Inc. 2001, 2004. All Rights Reserved
All other trademarks mentioned are the property of their respective owners.

Typical Application

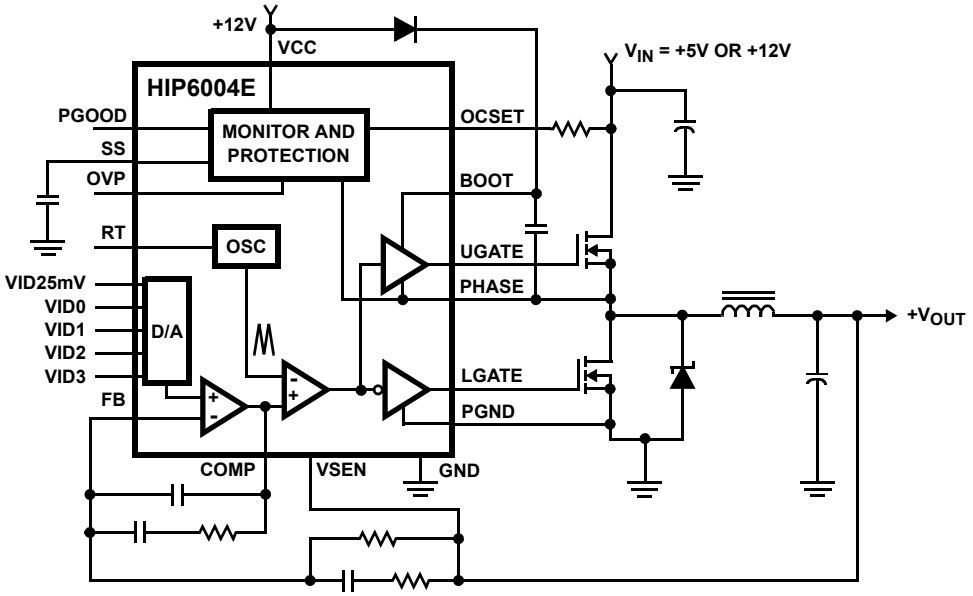

Block Diagram

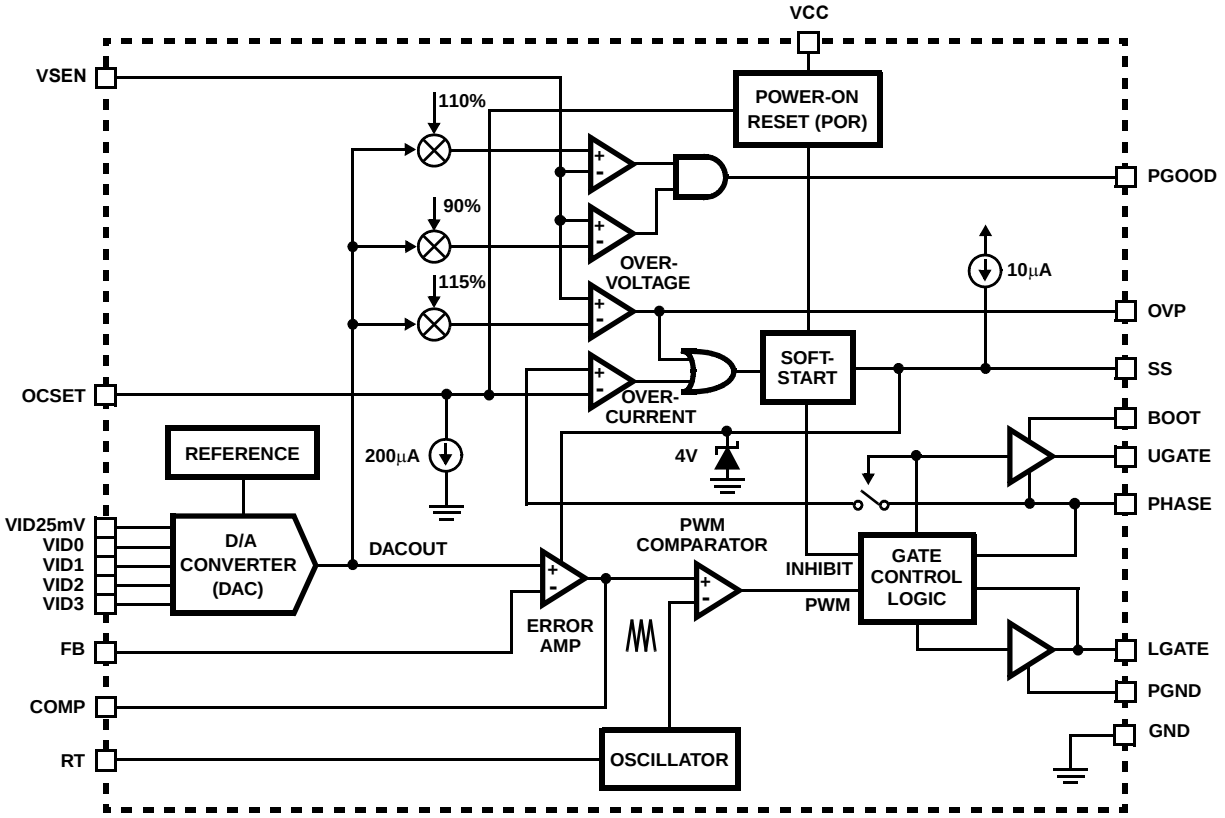

Absolute Maximum Ratings

Supply voltage, V_{CC} . . . . . +15V
Boot voltage, V_{BOOT} - V_{PHASE} . . . . . +15V
Input, output or I/O voltage . . . . . GND -0.3V to V_{CC} +0.3V
ESD classification . . . . . Class 2

Operating Conditions

Supply voltage, V_{CC} . . . . . +12V ±10%
Ambient temperature range . . . . . 0^oC to 70^oC

Thermal Information

Thermal resistance (Typical, Note 1) θ_{JA} ($^oC/W$)
SOIC package 65
TSSOP package 90
Maximum junction temperature . . . . . 150^oC
Maximum storage temperature range . . . . . -65^oC to 150^oC
Maximum lead temperature (soldering 10s) . . . . . 300^oC
(lead tips only)

CAUTION: Stresses above those listed in "Absolute Maximum Ratings" may cause permanent damage to the device. This is a stress only rating and operation of the device at these or any other conditions above those indicated in the operational sections of this specification is not implied.

NOTE:

1. θ_{JA} is measured with the component mounted on a high-effective thermal conductivity test board in free air. See Tech Brief TB379 for details.

Electrical Specifications

Recommended operating conditions, unless otherwise noted

PARAMETER	SYMBOL	TEST CONDITIONS	MIN	TYP	MAX	UNITS
VCC SUPPLY CURRENT						
Nominal supply	I_{CC}	UGATE and LGATE open	-	5	-	mA
POWER-ON RESET						
Rising VCC threshold		V_{OCSET} = 4.5V	-	-	10.4	V
Falling VCC threshold		V_{OCSET} = 4.5V	8.2	-	-	V
Rising V_{OCSET} threshold			-	1.26	-	V
OSCILLATOR						
Free running frequency		RT = open	185	200	215	kHz
Total variation		6kΩ < RT to GND < 200kΩ	-15	-	+15	%
Ramp amplitude	ΔV_{OSC}	RT = open	-	1.9	-	V_{P-P}
REFERENCE AND DAC						
DAC (VID0-VID4) input low voltage			-	-	0.8	V
DAC (VID0-VID4) input high voltage			2.0	-	-	V
DACOUT voltage accuracy			-1.0	-	+1.0	%
ERROR AMPLIFIER						
DC gain			-	88	-	dB
Gain-bandwidth product	GBWP		-	15	-	MHz
Slew rate	SR	COMP = 10pF	-	6	-	V/µs
GATE DRIVERS						
Upper gate source	I_{UGATE}	V_{BOOT} - V_{PHASE} = 12V, V_{UGATE} = 6V	350	500	-	mA
Upper gate sink	R_{UGATE}	I_{LGATE} = 0.3A	-	5.5	10	Ω
Lower gate source	I_{LGATE}	V_{CC} = 12V, V_{LGATE} = 6V	300	450	-	mA
Lower gate sink	R_{LGATE}	I_{LGATE} = 0.3A	-	3.5	6.5	Ω
PROTECTION						
Overvoltage trip (VSEN/DACOUT)			-	115	120	%
OCSET current source	I_{OCSET}	V_{OCSET} = 4.5V_{DC}	170	200	230	µA
OVP sourcing current	I_{OVP}	V_{SEN} = 5.5V, V_{OVP} = 0V	60	-	-	mA
Soft start current	I_{SS}		-	10	-	µA
POWER GOOD						
Upper threshold (VSEN/DACOUT)		VSEN rising	106	-	111	%
Lower threshold (VSEN/DACOUT)		VSEN falling	89	-	94	%
Hysteresis (VSEN/DACOUT)		Upper and lower threshold	-	2	-	%
PGOOD voltage low	V_{PGOOD}	I_{PGOOD} = -5mA	-	0.3	-	V

Typical Performance Curves

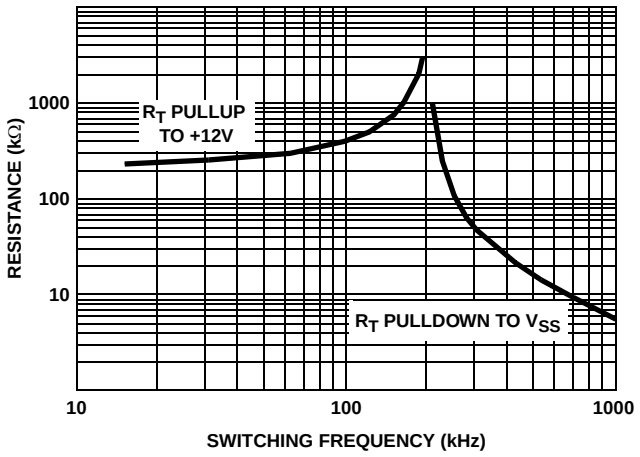

FIGURE 1. R_T RESISTANCE vs FREQUENCY

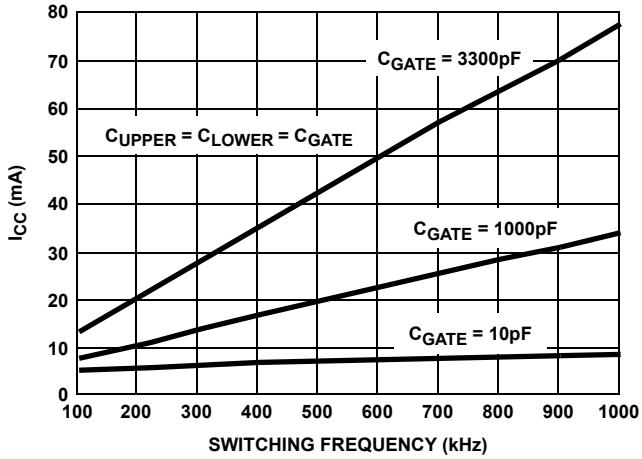

FIGURE 2. BIAS SUPPLY CURRENT vs FREQUENCY

Functional Pin Descriptions

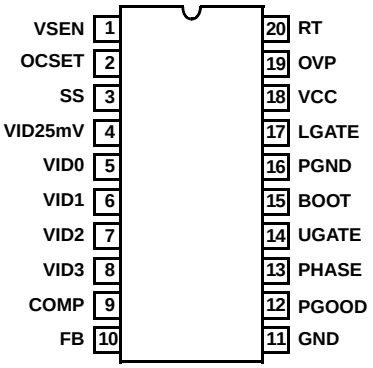

VSEN (Pin 1)

This pin is connected to the converter's output voltage. The PGOOD and OVP comparator circuits use this signal to report output voltage status and for overvoltage protection.

OCSET (Pin 2)

Connect a resistor (R_{OCSET}) from this pin to the drain of the upper MOSFET. R_{OCSET}, an internal 200µA current source (I_{OCSET}), and the upper MOSFET on-resistance ($r_{DS(ON)}$) set the converter overcurrent (OC) trip point according to the following equation:

$$I_{PEAK} = \frac{I_{OCSET} \times R_{OCSET}}{r_{DS(ON)}}$$

An over-current trip cycles the soft-start function.

SS (Pin 3)

Connect a capacitor from this pin to ground. This capacitor, along with an internal 10µA current source, sets the soft-start interval of the converter.

VID25mV-VID3 (Pins 4-8)

VID25mV - VID3 are the input pins to the 5-bit DAC. The states of these five pins program the internal voltage reference (DACOUT). The level of DACOUT sets the converter output voltage. It also sets the PGOOD and OVP thresholds. Table 1 specifies DACOUT for the all combinations of DAC inputs.

COMP (Pin 9) and FB (Pin 10)

COMP and FB are the available external pins of the error amplifier. The FB pin is the inverting input of the error amplifier and the COMP pin is the error amplifier output. These pins are used to compensate the voltage-control feedback loop of the converter.

GND (Pin 11)

Signal ground for the IC. All voltage levels are measured with respect to this pin.

PGOOD (Pin 12)

PGOOD is an open collector output used to indicate the status of the converter output voltage. This pin is pulled low when the converter output is not within ±10% of the DACOUT reference voltage.

PHASE (Pin 13)

Connect the PHASE pin to the upper MOSFET source. This pin is used to monitor the voltage drop across the MOSFET for overcurrent protection. This pin also provides the return path for the upper gate drive.

UGATE (Pin 14)

Connect UGATE to the upper MOSFET gate. This pin provides the gate drive for the upper MOSFET.

BOOT (Pin 15)

This pin provides bias voltage to the upper MOSFET driver. A bootstrap circuit may be used to create a BOOT voltage suitable to drive a standard N-Channel MOSFET.

PGND (Pin 16)

This is the power ground connection. Tie the lower MOSFET source to this pin.

LGATE (Pin 17)

Connect LGATE to the lower MOSFET gate. This pin provides the gate drive for the lower MOSFET.

VCC (Pin 18)

Provide a 12V bias supply for the chip to this pin.

OVP (Pin 19)

The OVP pin can be used to drive an external SCR in the event of an overvoltage condition. Output rising 15% more than the DAC-set voltage triggers a high output on this pin and disables PWM gate drive circuitry.

RT (Pin 20)

This pin provides oscillator switching frequency adjustment. By placing a resistor (R_T) from this pin to GND, the nominal 200kHz switching frequency is increased according to the following equation:

$$Fs \approx 200kHz + \frac{5 \times 10^6}{R_T(k\Omega)} \qquad (R_T \text{ to GND})$$

Conversely, connecting a pull-up resistor (R_T) from this pin to V_{CC} reduces the switching frequency according to the following equation:

$$Fs \approx 200kHz - \frac{4 \times 10^7}{R_T(k\Omega)} \qquad (R_T \text{ to 12V})$$

RT pin has a constant voltage of 1.26V typically.

Functional Description

Initialization

The HIP6004E automatically initializes upon receipt of power. Special sequencing of the input supplies is not necessary. The Power-On Reset (POR) function continually monitors the input supply voltages. The POR monitors the bias voltage at the VCC pin and the input voltage (V_{IN}) on the OCSET pin. The level on OCSET is equal to V_{IN} less a fixed voltage drop (see over-current protection). The POR function initiates soft-start operation after both input supply voltages exceed their POR thresholds. For operation with a single +12V power source, V_{IN} and V_{CC} are equivalent and the +12V power source must exceed the rising VCC threshold before POR initiates operation.

Soft Start

The POR function initiates the soft-start sequence. An internal 10µA current source charges an external capacitor (C_{SS}) on the SS pin to 4V. Soft start clamps the error amplifier output (COMP pin) and reference input (+ terminal of error amp) to the SS pin voltage. Figure 3 shows the soft-start interval with C_{SS} = 0.1µF. Initially the clamp on the error amplifier (COMP pin) controls the converter's output voltage. At t_1 in Figure 3, the SS voltage reaches the valley of the oscillator's triangle wave. The oscillator's triangular waveform is compared to the ramping error amplifier voltage. This generates PHASE pulses of increasing width that charge the output capacitor(s). This interval of increasing pulse width continues to t_2. With sufficient output voltage, the clamp on the reference input controls the output voltage. This is the interval between t_2 and t_3 in Figure 3. At t_3 the SS voltage exceeds the DACOUT voltage and the output voltage is in regulation. This method provides a rapid and controlled output voltage rise. The PGOOD signal toggles 'high' when the output voltage (VSEN pin) is within ±10% of DACOUT. The 2% hysteresis built into the power good comparators prevents PGOOD oscillation due to nominal output voltage ripple.

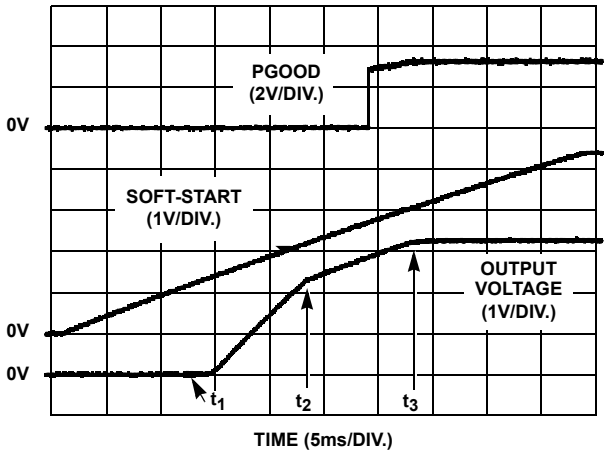

FIGURE 3. SOFT START INTERVAL

Overcurrent Protection

The overcurrent function protects the converter from a shorted output by using the upper MOSFET's on-resistance, $r_{DS(ON)}$ to monitor the current. This method enhances the converter's efficiency and reduces cost by eliminating a current sensing resistor.

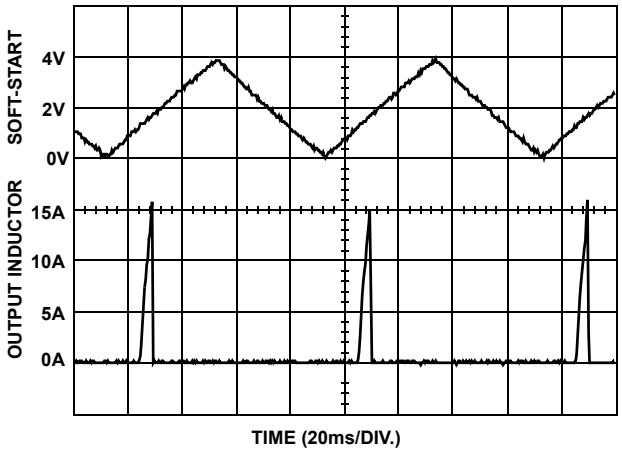

FIGURE 4. OVER-CURRENT OPERATION

The overcurrent function cycles the soft-start function in a hiccup mode to provide fault protection. A resistor (R_{OCSET}) programs the overcurrent trip level. An internal 200µA current sink develops a voltage across R_{OCSET} that is referenced to V_{IN}. When the voltage across the upper MOSFET (also referenced to V_{IN}) exceeds the voltage across R_{OCSET}, the overcurrent function initiates a soft-start sequence. The soft-start function discharges C_{SS} with a 10µA current sink and inhibits PWM operation. The soft-start function recharges C_{SS}, and PWM operation resumes with the error amplifier clamped to the SS voltage. Should an overload occur while recharging C_{SS}, the soft-start function inhibits PWM operation while fully charging C_{SS} to 4V to complete its cycle. Figure 4 shows this operation with an overload condition. Note that the inductor current increases to over 15A during the C_{SS} charging interval and causes an overcurrent trip. The converter dissipates very little power with this method. The measured input power for the conditions of Figure 4 is 2.5W.

The overcurrent function will trip at a peak inductor current (I_{PEAK}) determined by:

$$I_{PEAK} = \frac{I_{OCSET} \times R_{OCSET}}{r_{DS(ON)}}$$

where I_{OCSET} is the internal OCSET current source (200µA typical). The OC trip point varies mainly due to the MOSFET's $r_{DS(ON)}$ variations. To avoid overcurrent tripping in the normal operating load range, find the R_{OCSET} resistor from the equation above with:

1. The maximum $r_{DS(ON)}$ at the highest junction temperature.
2. The minimum I_{OCSET} from the specification table.
3. Determine I_{PEAK} for $I_{PEAK} > I_{OUT(MAX)} + (\Delta I)/2$, where ΔI is the output inductor ripple current.

For an equation for the ripple current see the section under component guidelines titled "Output Inductor Selection".

A small, ceramic capacitor should be placed in parallel with R_{OCSET} to smooth the voltage across R_{OCSET} in the presence of switching noise on the input voltage.

Output Voltage Program

The output voltage of a HIP6004E converter is programmed to discreet levels between $1.05V_{DC}$ and $1.825V_{DC}$. The voltage identification (VID) pins program an internal voltage reference (DACOUT) with a TTL-compatible 5-bit digital-to-analog converter (DAC). The level of DACOUT also sets the PGOOD and OVP thresholds. Table 1 specifies the DACOUT voltage for the 32 different combinations of connections on the VID pins. The output voltage should not be adjusted while the converter is delivering power. Remove input power before changing the output voltage. Adjusting the output voltage during operation could toggle the PGOOD signal and exercise the overvoltage protection.

Application Guidelines

Layout Considerations

As in any high frequency switching converter, layout is very important. Switching current from one power device to another can generate voltage transients across the impedances of the interconnecting bond wires and circuit traces. These interconnecting impedances should be minimized by using wide, short-printed circuit traces. The critical components should be located as close together as possible, using ground plane construction or single point grounding.

TABLE 1. OUTPUT VOLTAGE PROGRAM

PIN NAME						PIN NAME					
VID25 mV	VID3	VID2	VID1	VID0	NOMINAL OUTPUT VOLTAGE DACOUT	VID25 mV	VID3	VID2	VID1	VID0	NOMINAL OUTPUT VOLTAGE DACOUT
0	0	1	0	0	1.050	0	1	1	0	0	1.450
1	0	1	0	0	1.075	1	1	1	0	0	1.475
0	0	0	1	1	1.100	0	1	0	1	1	1.500
1	0	0	1	1	1.125	1	1	0	1	1	1.525
0	0	0	1	0	1.150	0	1	0	1	0	1.550
1	0	0	1	0	1.175	1	1	0	1	0	1.575
0	0	0	0	1	1.200	0	1	0	0	1	1.600
1	0	0	0	1	1.225	1	1	0	0	1	1.625
0	0	0	0	0	1.250	0	1	0	0	0	1.650
1	0	0	0	0	1.275	1	1	0	0	0	1.675

TABLE 1. OUTPUT VOLTAGE PROGRAM (Continued)

PIN NAME					NOMINAL OUTPUT VOLTAGE DACOUT	PIN NAME					NOMINAL OUTPUT VOLTAGE DACOUT
VID25 mV	VID3	VID2	VID1	VID0		VID25 mV	VID3	VID2	VID1	VID0	
0	1	1	1	1	1.300	0	0	1	1	1	1.700
1	1	1	1	1	1.325	1	0	1	1	1	1.725
0	1	1	1	0	1.350	0	0	1	1	0	1.750
1	1	1	1	0	1.375	1	0	1	1	0	1.775
0	1	1	0	1	1.400	0	0	1	0	1	1.800
1	1	1	0	1	1.425	1	0	1	0	1	1.825

NOTE: 0 = connected to GND or V_{SS}, 1 = connected to V_{DD} through pull-up resistors or leave the pins floating. Internal pull-ups will force the floating VID pins to HIGH.

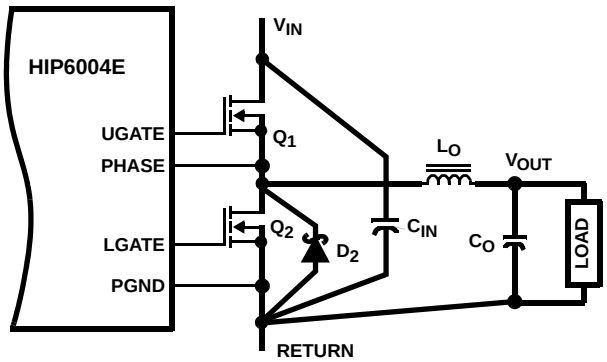

FIGURE 5. PRINTED CIRCUIT BOARD POWER AND GROUND PLANES OR ISLANDS

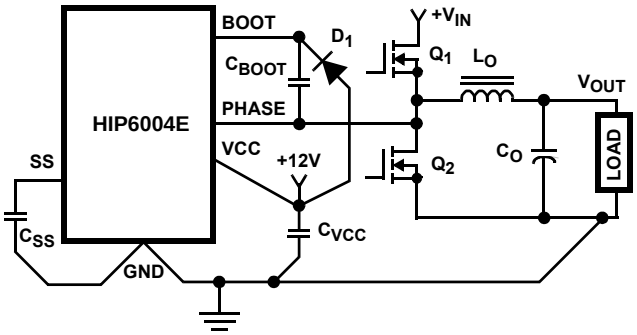

FIGURE 6. PRINTED CIRCUIT BOARD SMALL SIGNAL LAYOUT GUIDELINES

Figure 5 shows the critical power components of the converter. To minimize the voltage overshoot the interconnecting wires indicated by heavy lines should be part of ground or power plane in a printed circuit board. The components shown in Figure 5 should be located as close together as possible. Please note that the capacitors C_{IN} and C_O each represent numerous physical capacitors. Locate the HIP6004E within 3 inches of the MOSFETs, Q_1 and Q_2. The circuit traces for the MOSFETs' gate and source connections from the HIP6004E must be sized to handle up to 1A peak current.

Figure 6 shows the circuit traces that require additional layout consideration. Use single point and ground plane construction for the circuits shown. Minimize any leakage current paths on the SS pin and locate the capacitor, C_{SS} close to the SS pin because the internal current source is only 10µA. Provide local V_{CC} decoupling between VCC and GND pins. Locate the capacitor, C_{BOOT} as close as practical to the BOOT and PHASE pins.

Feedback Compensation

Figure 7 highlights the voltage-mode control loop for a synchronous-rectified buck converter. The output voltage (V_{OUT}) is regulated to the Reference voltage level. The error amplifier (Error Amp) output ($V_{E/A}$) is compared with the oscillator (OSC) triangular wave to provide a pulse-width modulated (PWM) wave with an amplitude of V_{IN} at the PHASE node.

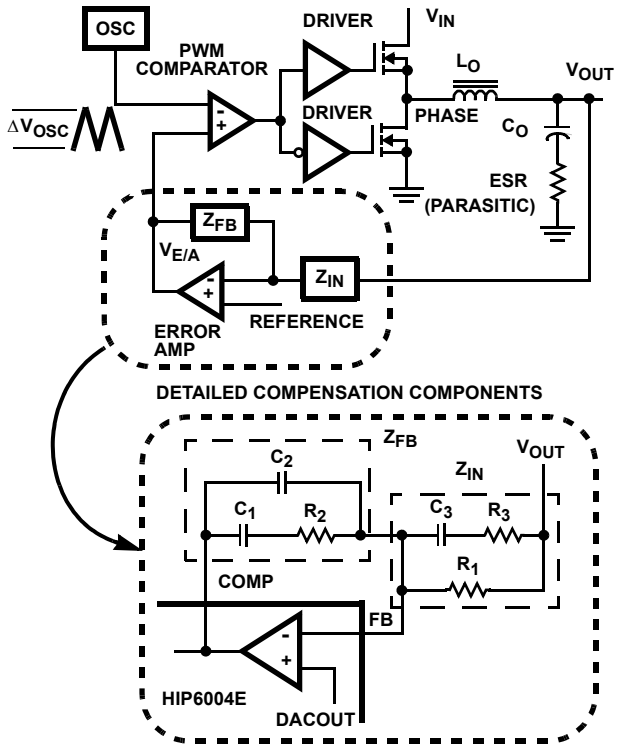

FIGURE 7. VOLTAGE-MODE BUCK CONVERTER COMPENSATION DESIGN

The PWM wave is smoothed by the output filter (L_O and C_O). The modulator transfer function is the small-signal transfer function of $V_{OUT}/V_{E/A}$. This function is dominated by a DC Gain and the output filter (L_O and C_O), with a double pole break frequency at F_{LC} and a zero at F_{ESR}. The DC Gain of the modulator is simply the input voltage (V_{IN}) divided by the peak-to-peak oscillator voltage ΔV_{OSC}.

Modulator Break Frequency Equations

$$F_{LC} = \frac{1}{2\pi \times \sqrt{L_O \times C_O}} \qquad F_{ESR} = \frac{1}{2\pi \times ESR \times C_O}$$

The compensation network consists of the error amplifier (internal to the HIP6004E) and the impedance networks Z_{IN} and Z_{FB}. The goal of the compensation network is to provide a closed loop transfer function with the highest 0dB crossing frequency (f_{0dB}) and adequate phase margin. Phase margin is the difference between the closed loop phase at f_{0dB} and 180 degrees. The equations below relate the compensation network's poles, zeros and gain to the components (R_1, R_2, R_3, C_1, C_2, and C_3) in Figure 7. Use these guidelines for locating the poles and zeros of the compensation network:

1. Pick Gain (R_2/R_1) for desired converter bandwidth.
2. Place 1ST Zero Below Filter's Double Pole (~75% F_{LC}).
3. Place 2ND Zero at Filter's Double Pole.
4. Place 1ST Pole at the ESR Zero.
5. Place 2ND Pole at Half the Switching Frequency.
6. Check Gain against Error Amplifier's Open-Loop Gain.
7. Estimate Phase Margin - Repeat if Necessary.

Compensation Break Frequency Equations

$$F_{Z1} = \frac{1}{2\pi \times R_2 \times C_1} \qquad F_{P1} = \frac{1}{2\pi \times R_2 \times \left(\frac{C_1 \times C_2}{C_1 + C_2}\right)}$$

$$F_{Z2} = \frac{1}{2\pi \times (R_1 + R_3) \times C_3} \qquad F_{P2} = \frac{1}{2\pi \times R_3 \times C_3}$$

Figure 8 shows an asymptotic plot of the DC-DC converter's gain vs. frequency. The actual Modulator Gain has a high gain peak due to the high Q factor of the output filter and is not shown in Figure 8. Using the above guidelines should give a Compensation Gain similar to the curve plotted. The open loop error amplifier gain bounds the compensation gain. Check the compensation gain at F_{P2} with the capabilities of the error amplifier. The Closed Loop Gain is constructed on the log-log graph of Figure 8 by adding the Modulator Gain (in dB) to the Compensation Gain (in dB). This is equivalent to multiplying the modulator transfer function to the compensation transfer function and plotting the gain.

The compensation gain uses external impedance networks Z_{FB} and Z_{IN} to provide a stable, high bandwidth (BW) overall loop. A stable control loop has a gain crossing with -20dB/decade slope and a phase margin greater than 45 degrees. Include worst case component variations when determining phase margin.

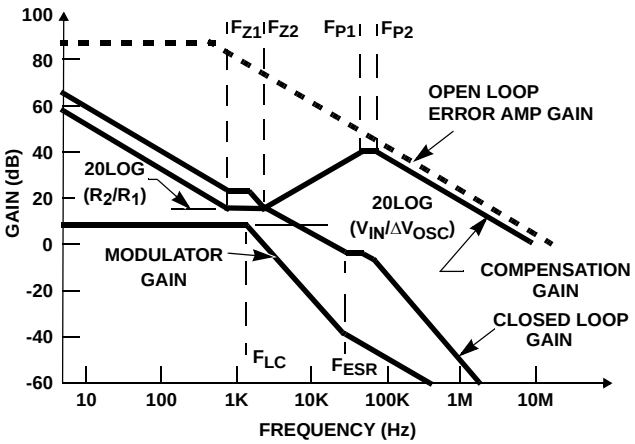

FIGURE 8. ASYMPTOTIC BODE PLOT OF CONVERTER GAIN

Component Selection Guidelines

Output Capacitor Selection

An output capacitor is required to filter the output and supply the load transient current. The filtering requirements are a function of the switching frequency and the ripple current. The load transient requirements are a function of the slew rate (di/dt) and the magnitude of the transient load current. These requirements are generally met with a mix of capacitors and careful layout.

Modern microprocessors produce transient load rates above 1A/ns. High frequency capacitors initially supply the transient and slow the current load rate seen by the bulk capacitors.

The bulk filter capacitor values are generally determined by the ESR (Effective Series Resistance) and voltage rating requirements rather than actual capacitance requirements.

High frequency decoupling capacitors should be placed as close to the power pins of the load as physically possible. Be careful not to add inductance in the circuit board wiring that could cancel the usefulness of these low inductance components. Consult with the manufacturer of the load on specific decoupling requirements.

Use only specialized low ESR capacitors intended for switching-regulator applications for the bulk capacitors. The bulk capacitor's ESR will determine the output ripple voltage and the initial voltage drop after a high slew-rate transient. An aluminum electrolytic capacitor's ESR value is related to the case size with lower ESR available in larger case sizes. However, the Equivalent Series Inductance (ESL) of these capacitors increases with case size and can reduce the usefulness of the capacitor to high slew-rate transient loading. Unfortunately, ESL is not a specified parameter. Work with your capacitor supplier and measure the capacitor's impedance with frequency to select a suitable component. In most cases, multiple electrolytic capacitors of small case size perform better than a single large-case capacitor.

Output Inductor Selection

The output inductor is selected to meet the output voltage ripple requirements and minimize the converter's response time to the load transient. The inductor value determines the converter's ripple current and the ripple voltage is a function of the ripple current. The ripple voltage and current are approximated by the following equations:

$$\Delta I = \frac{V_{IN} - V_{OUT}}{Fs \times L} \times \frac{V_{OUT}}{V_{IN}} \qquad \Delta V_{OUT} = \Delta I \times ESR$$

Increasing the value of inductance reduces the ripple current and voltage. However, the large inductance values reduce the converter's response time to a load transient.

One of the parameters limiting the converter's response to a load transient is the time required to change the inductor current. Given a sufficiently fast control loop design, the HIP6004E will provide either 0% or 100% duty cycle in response to a load transient. The response time is the time required to slew the inductor current from an initial current value to the transient current level. During this interval the difference between the inductor current and the transient current level must be supplied by the output capacitor. Minimizing the response time can minimize the output capacitance required.

The response time to a transient is different for the application of load and the removal of load. The following equations give the approximate response time interval for application and removal of a transient load:

$$t_{RISE} = \frac{L \times I_{TRAN}}{V_{IN} - V_{OUT}} \qquad t_{FALL} = \frac{L \times I_{TRAN}}{V_{OUT}}$$

where: I_{TRAN} is the transient load current step, t_{RISE} is the response time to the application of load, and t_{FALL} is the response time to the removal of load. With a +5V input source, the worst-case response time can be either at the application or removal of load and dependent upon the DACOUT setting. Be sure to check both of these equations at the minimum and maximum output levels for the worst case response time. With a +12V input, and output voltage level equal to DACOUT, t_{FALL} is the longest response time.

Input Capacitor Selection

Use a mix of input bypass capacitors to control the voltage overshoot across the MOSFETs. Use small ceramic capacitors for high-frequency decoupling and bulk capacitors to supply the current needed each time Q_1 turns on. Place the small ceramic capacitors physically close to the MOSFETs and between the drain of Q_1 and the source of Q_2.

The important parameters for the bulk input capacitor are the voltage rating and the RMS current rating. For reliable operation, select the bulk capacitor with voltage and current ratings above the maximum input voltage and largest RMS current required by the circuit. The capacitor voltage rating should be at least 1.25 times greater than the maximum input voltage and a voltage rating of 1.5 times is a conservative guideline. The RMS current rating requirement for the input capacitor of a buck regulator is approximately 1/2 the DC load current.

For a through-hole design, several electrolytic capacitors may be needed. For surface mount designs, solid tantalum capacitors can be used, but caution must be exercised with regard to the capacitor surge current rating. These capacitors must be capable of handling the surge current at power-up. Some capacitor series available from reputable manufacturers are surge current tested.

MOSFET Selection/Considerations

The HIP6004E requires 2 N-Channel power MOSFETs. These should be selected based upon $r_{DS(ON)}$, gate supply requirements, and thermal management requirements.

In high-current applications, the MOSFET power dissipation, package selection and heatsink are the dominant design factors. The power dissipation includes two loss components; conduction loss and switching loss. The conduction losses are the largest component of power dissipation for both the upper and the lower MOSFETs. These losses are distributed between the two MOSFETs according to duty factor (see the equations below). Only the upper MOSFET has switching losses, since the Schottky rectifier clamps the switching node before the synchronous rectifier turns on. These equations assume linear voltage current transitions and do not adequately model power loss due the reverse recovery of the lower MOSFET's body diode. The gate-charge losses are dissipated by the HIP6004E and don't heat the MOSFETs. However, large gate charge increases the switching interval, t_{SW} which increases the upper MOSFET switching losses. Ensure that both MOSFETs are

within their maximum junction temperature at high ambient temperature by calculating the temperature rise according to package thermal-resistance specifications. A separate heatsink may be necessary depending upon MOSFET power, package type, ambient temperature and air flow.

$$P_{UPPER} = Io^2 \times r_{DS(ON)} \times D + \frac{1}{2} Io \times V_{IN} \times t_{SW} \times F_S$$

$$P_{LOWER} = Io^2 \times r_{DS(ON)} \times (1 - D)$$

Where: D is the duty cycle = V_{OUT} / V_{IN},
t_{SW} is the switch ON time, and
F_S is the switching frequency.

Standard-gate MOSFETs are normally recommended for use with the HIP6004E. However, logic-level gate MOSFETs can be used under special circumstances. The input voltage, upper gate drive level, and the MOSFET's absolute gate-to-source voltage rating determine whether logic-level MOSFETs are appropriate.

Figure 9 shows the upper gate drive (BOOT pin) supplied by a bootstrap circuit from V_{CC}. The boot capacitor, C_{BOOT} develops a floating supply voltage referenced to the PHASE pin. This supply is refreshed each cycle to a voltage of V_{CC} less the boot diode drop (V_D) when the lower MOSFET, Q_2 turns on. Logic-level MOSFETs can only be used if the MOSFET's absolute gate-to-source voltage rating exceeds the maximum voltage applied to VCC.

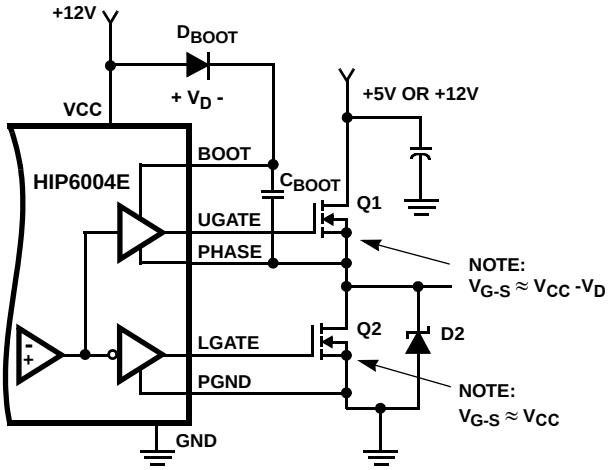

FIGURE 9. UPPER GATE DRIVE - BOOTSTRAP OPTION

Figure 10 shows the upper gate drive supplied by a direct connection to V_{CC}. This option should only be used in converter systems where the main input voltage is $+5V_{DC}$ or less. The peak upper gate-to-source voltage is approximately V_{CC} less the input supply. For +5V main power and $+12V_{DC}$ for the bias, the gate-to-source voltage of Q_1 is 7V. A logic-level MOSFET is a good choice for Q_1 and a logic-level MOSFET can be used for Q_2 if its absolute gate-to-source voltage rating exceeds the maximum voltage applied to V_{CC}.

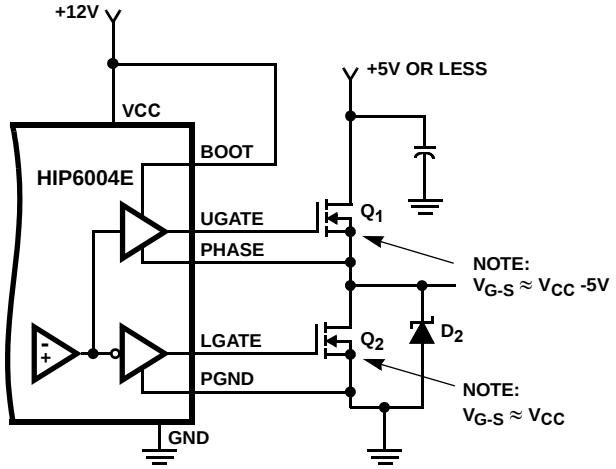

FIGURE 10. UPPER GATE DRIVE - DIRECT V_{CC} DRIVE OPTION

Schottky Selection

Rectifier D_2 is a clamp that catches the negative inductor swing during the dead time between turning off the lower MOSFET and turning on the upper MOSFET. The diode must be a Schottky type to prevent the lossy parasitic MOSFET body diode from conducting. It is acceptable to omit the diode and let the body diode of the lower MOSFET clamp the negative inductor swing, but efficiency will drop one or two percent as a result. The diode's rated reverse breakdown voltage must be greater than the maximum input voltage.

HIP6004E DC-DC Converter Application Circuit

Figure 11 shows an application circuit of a DC-DC Converter for a microprocessor. Detailed information on the circuit, including a complete bill-of-materials and circuit board description, can be found in AN9916. This application note also contains the application information for ISL6525, an controller IC designed to meet the VTT voltage and power-up sequencing specification given in the Intel VRM8.5.

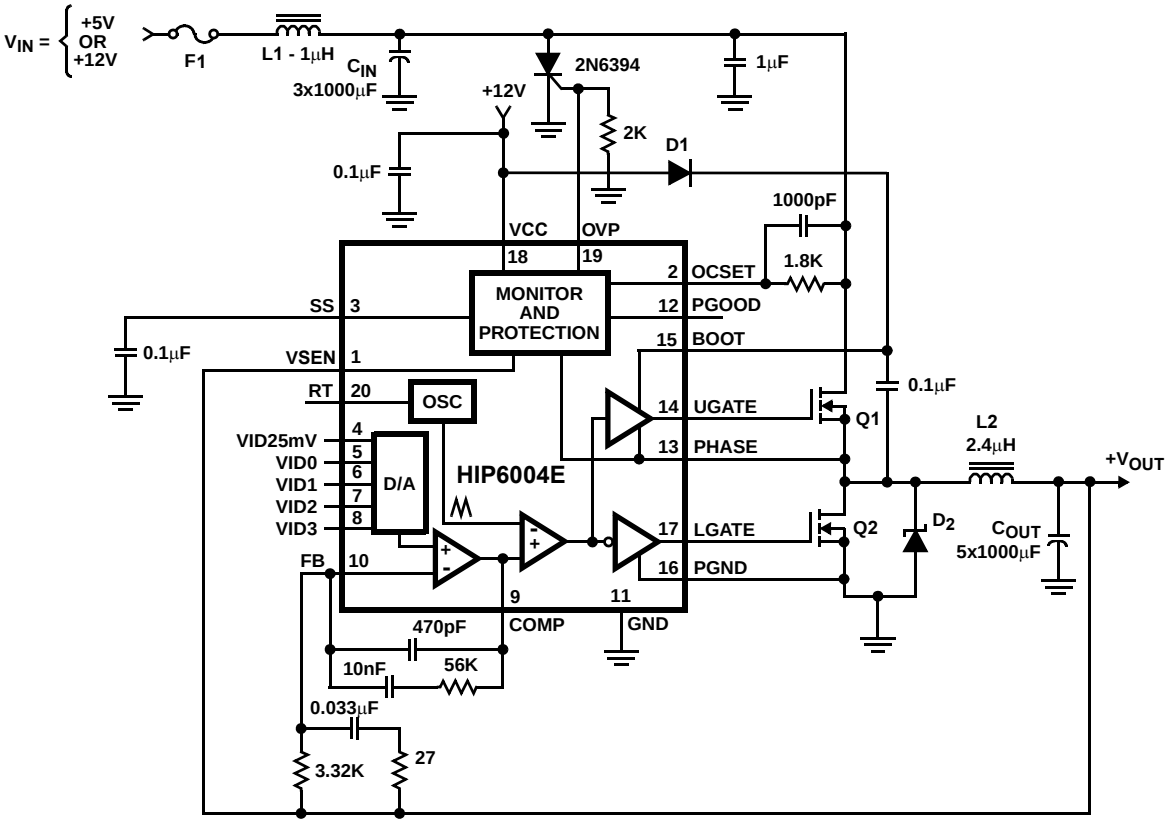

Component Selection Notes:

C_{OUT} - Each 1000µF 6.3W VDC, Rubycon ZA series or equivalent.
C_{IN} - Each 330µF 25W VDC, Rubycon ZA series or equivalent.
L_2 - Core: micrometals T68-52A; winding: 7 turns of 16AWG.
L_1 - Core: micrometals T50-52; winding: 5 turns of 16AWG.
D_1 - 1N4148 or equivalent.
D_2 - 3A, 40V Schottky, Motorola MBR340 or equivalent.
Q_1 - Intersil MOSFET; HUF76137.
Q_2 - Intersil MOSFET; HUF76139.

FIGURE 11. MICROPROCESSOR DC-DC CONVERTER

Thin Shrink Small Outline Plastic Packages (TSSOP)

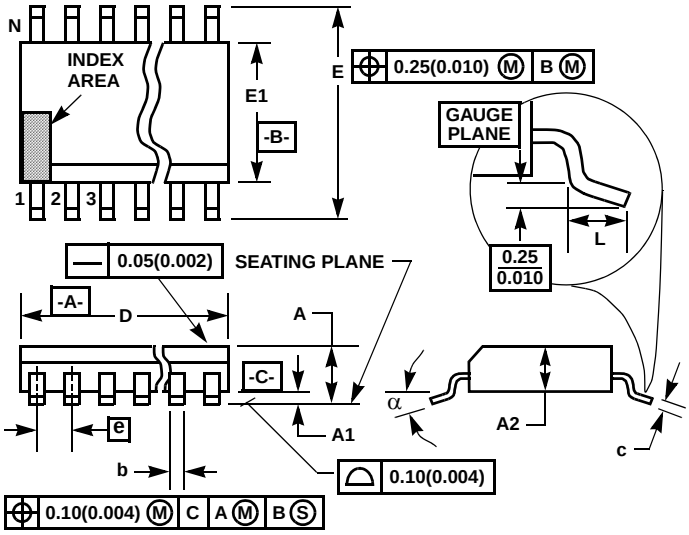

NOTES:

1. These package dimensions are within allowable dimensions of JEDEC MO-153-AC, Issue E.
2. Dimensioning and tolerancing per ANSI Y14.5M-1982.
3. Dimension “D” does not include mold flash, protrusions or gate burrs. Mold flash, protrusion and gate burrs shall not exceed 0.15mm (0.006 inch) per side.
4. Dimension “E1” does not include interlead flash or protrusions. Interlead flash and protrusions shall not exceed 0.15mm (0.006 inch) per side.
5. The chamfer on the body is optional. If it is not present, a visual index feature must be located within the crosshatched area.
6. “L” is the length of terminal for soldering to a substrate.
7. “N” is the number of terminal positions.
8. Terminal numbers are shown for reference only.
9. Dimension “b” does not include dambar protrusion. Allowable dambar protrusion shall be 0.08mm (0.003 inch) total in excess of “b” dimension at maximum material condition. Minimum space between protrusion and adjacent lead is 0.07mm (0.0027 inch).
10. Controlling dimension: MILLIMETER. Converted inch dimensions are not necessarily exact. (Angles in degrees)

M20.173

20 LEAD THIN SHRINK SMALL OUTLINE PLASTIC PACKAGE

SYMBOL	INCHES		MILLIMETERS		NOTES
	MIN	MAX	MIN	MAX	
A	-	0.047	-	1.20	-
A1	0.002	0.006	0.05	0.15	-
A2	0.031	0.051	0.80	1.05	-
b	0.0075	0.0118	0.19	0.30	9
c	0.0035	0.0079	0.09	0.20	-
D	0.252	0.260	6.40	6.60	3
E1	0.169	0.177	4.30	4.50	4
e	0.026 BSC		0.65 BSC		-
E	0.246	0.256	6.25	6.50	-
L	0.0177	0.0295	0.45	0.75	6
N	20		20		7
α	0°	8°	0°	8°	-

Rev. 1 6/98

Small Outline Plastic Packages (SOIC)

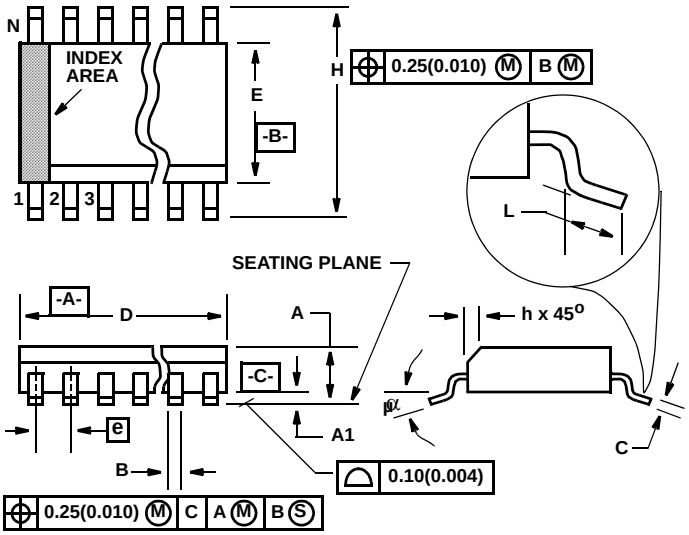

M20.3 **(JEDEC MS-013-AC ISSUE C)**
20 LEAD WIDE BODY SMALL OUTLINE PLASTIC PACKAGE

SYMBOL	INCHES		MILLIMETERS		NOTES
	MIN	MAX	MIN	MAX	
A	0.0926	0.1043	2.35	2.65	-
A1	0.0040	0.0118	0.10	0.30	-
B	0.014	0.019	0.35	0.49	9
C	0.0091	0.0125	0.23	0.32	-
D	0.4961	0.5118	12.60	13.00	3
E	0.2914	0.2992	7.40	7.60	4
e	0.050 BSC		1.27 BSC		-
H	0.394	0.419	10.00	10.65	-
h	0.010	0.029	0.25	0.75	5
L	0.016	0.050	0.40	1.27	6
N	20		20		7
α	0°	8°	0°	8°	-

Rev. 1 1/02

NOTES:

1. Symbols are defined in the “MO Series Symbol List” in Section 2.2 of Publication Number 95.
2. Dimensioning and tolerancing per ANSI Y14.5M-1982.
3. Dimension “D” does not include mold flash, protrusions or gate burrs. Mold flash, protrusion and gate burrs shall not exceed 0.15mm (0.006 inch) per side.
4. Dimension “E” does not include interlead flash or protrusions. Interlead flash and protrusions shall not exceed 0.25mm (0.010 inch) per side.
5. The chamfer on the body is optional. If it is not present, a visual index feature must be located within the crosshatched area.
6. “L” is the length of terminal for soldering to a substrate.
7. “N” is the number of terminal positions.
8. Terminal numbers are shown for reference only.
9. The lead width “B”, as measured 0.36mm (0.014 inch) or greater above the seating plane, shall not exceed a maximum value of 0.61mm (0.024 inch)
10. Controlling dimension: MILLIMETER. Converted inch dimensions are not necessarily exact.

All Intersil products are manufactured, assembled and tested utilizing ISO9000 quality systems.
Intersil Corporation’s quality certifications can be viewed at www.intersil.com/design/quality

Intersil products are sold by description only. Intersil Corporation reserves the right to make changes in circuit design, software and/or specifications at any time without notice. Accordingly, the reader is cautioned to verify that data sheets are current before placing orders. Information furnished by Intersil is believed to be accurate and reliable. However, no responsibility is assumed by Intersil or its subsidiaries for its use; nor for any infringements of patents or other rights of third parties which may result from its use. No license is granted by implication or otherwise under any patent or patent rights of Intersil or its subsidiaries.

For information regarding Intersil Corporation and its products, see www.intersil.com

НИОКР СИСТЕМС

ООО «НИОКРсистемс» - это оперативные поставки широкого спектра электронных компонентов отечественного и импортного производства напрямую от производителей и с крупнейших мировых складов. Реализуемая нашей компанией продукция насчитывает более полумиллиона наименований.

Благодаря этому наша компания предлагает к поставке практически не ограниченный ассортимент компонентов как оптовыми, мелкооптовыми партиями, так и в розницу.

Благодаря развитой сети поставщиков, помогаем в поиске и приобретении экзотичных или снятых с производства компонентов.

Наша компания это:

- Гарантия качества поставляемой продукции
- Широкий ассортимент
- Минимальные сроки поставок
- Техническая поддержка
- Подбор комплектации
- Индивидуальный подход
- Гибкое ценообразование
- Работаем по 275 ФЗ

ООО «НИОКР СИТЕМС»
Москва, 125362, Россия, ул. Вишневая, д. 9, к. 1, Блок 104 а и 104 в

Телефон: 8 (495) 268-14-82
Email: n@nsistems.ru

ИНН: 7735154786
ОГРН: 1167746717709