CD54HC4049, CD74HC4049, CD54HC4050, CD74HC4050

Data sheet acquired from Harris Semiconductor
SCHS205I

February 1998 - Revised February 2005

High-Speed CMOS Logic Hex Buffers, Inverting and Non-Inverting

Features

- **Typical Propagation Delay: 6ns at V_{CC} = 5V, C_L = 15pF, T_A = 25°C**
- **High-to-Low Voltage Level Converter for up to V_I = 16V**
- **Fanout (Over Temperature Range)**
  - **Standard Outputs . . . . . 10 LSTTL Loads**
  - **Bus Driver Outputs . . . . . 15 LSTTL Loads**
- **Wide Operating Temperature Range . . . –55°C to 125°C**
- **Balanced Propagation Delay and Transition Times**
- **Significant Power Reduction Compared to LSTTL Logic ICs**
- **HC Types**
  - **2V to 6V Operation**
  - **High Noise Immunity: N_{IL} = 30%, N_{IH} = 30%of V_{CC} at V_{CC} = 5V**

Pinout

CD54HC4049, CD54HC4050
(CERDIP)
CD74HC4049, CD74HC4050
(PDIP, SOIC, SOP, TSSOP)
TOP VIEW

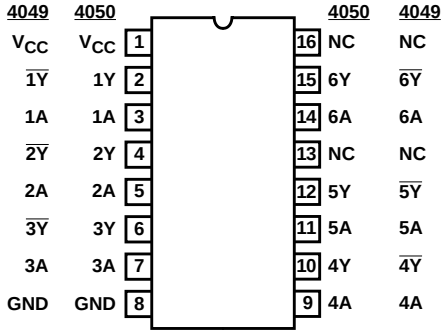

Description

The ’HC4049 and ’HC4050 are fabricated with high-speed silicon gate technology. They have a modified input protection structure that enables these parts to be usedas logic level translators which convert high-level logic to a low-level logic while operating off the low-level logic supply. For example, 15-V input pulse levels can be down-converted to 0-V to 5-V logic levels. The modified input protection structure protects the input from negative electrostatic discharge. These parts also can be used as simple buffers or inverters without level translation. The ’HC4049 and ’HC4050 are enhanced versions of equivalent CMOS types.

Ordering Information

PART NUMBER	TEMP. RANGE (°C)	PACKAGE
CD54HC4049F3A	–55 to 125	16 Ld CERDIP
CD54HC4050F3A	–55 to 125	16 Ld CERDIP
CD74HC4049E	–55 to 125	16 Ld PDIP
CD74HC4049M	–55 to 125	16 Ld SOIC
CD74HCT4050MT	–55 to 125	16 Ld SOIC
CD74HC4049M96	–55 to 125	16 Ld SOIC
CD74HC4049NSR	–55 to 125	16 Ld SOP
CD74HC4049PW	–55 to 125	16 Ld TSSOP
CD74HC4049PWR	–55 to 125	16 Ld TSSOP
CD74HC4049PWT	–55 to 125	16 Ld TSSOP
CD74HC4050E	–55 to 125	16 Ld PDIP
CD74HC4050M	–55 to 125	16 Ld SOIC
CD74HC4050MT	–55 to 125	16 Ld SOIC
CD74HC4050M96	–55 to 125	16 Ld SOIC
CD74HC4050NSR	–55 to 125	16 Ld SOP
CD74HC4050PW	–55 to 125	16 Ld TSSOP
CD74HC4050PWR	–55 to 125	16 Ld TSSOP
CD74HC4050PWT	–55 to 125	16 Ld TSSOP

NOTE: When ordering, use the entire part number. The suffixes 96 and R denote tape and reel. The suffix T denotes a small-quantity reel of 250.

CAUTION: These devices are sensitive to electrostatic discharge. Users should follow proper IC Handling Procedures.

Copyright © 2005,Texas Instruments Incorporated

Functional Diagram

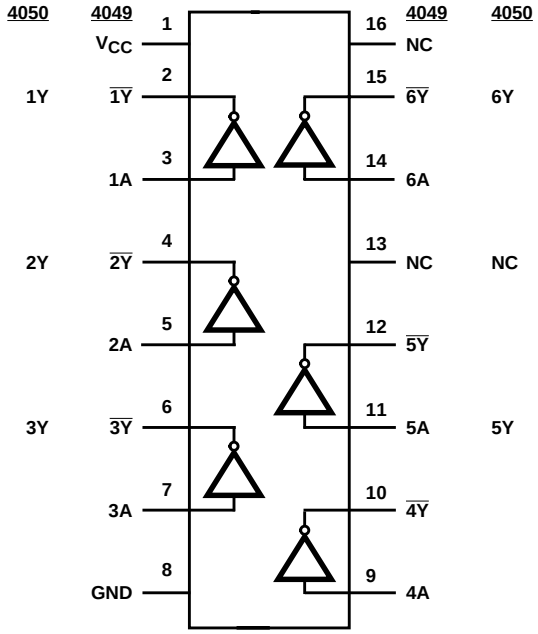

Logic Diagrams

HC4049

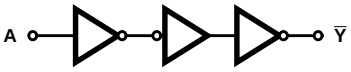

HC4050

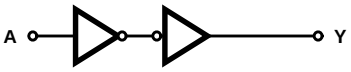

Absolute Maximum Ratings

DC Supply Voltage, V_{CC} . . . . . –0.5V to 7V
Input Voltage Range . . . . . –0.5V to 16V
DC Input Diode Current, I_{IK}
For V_I < –0.5V . . . . . –20mA
DC Output Diode Current, I_{OK}
For V_O < –0.5V or V_O > V_{CC} + 0.5V . . . . . ±20mA
DC Output Source or Sink Current per Output Pin, I_O
For V_O > –0.5V or V_O < V_{CC} + 0.5V . . . . . ±25mA
DC V_{CC} or Ground Current, $I_{CC\ or}$ I_{GND} . . . . . ±50mA

Operating Conditions

Temperature Range (T_A) . . . . . –55°C to 125°C
Supply Voltage Range, V_{CC}
HC Types . . . . . 2V to 6V
HCT Types . . . . . 4.5V to 5.5V
DC Input Voltage, V_I . . . . . 0V to 15V
DC Output Voltage, V_O . . . . . 0V to V_{CC}
Input Rise and Fall Time
2V . . . . . 1000ns (Max)
4.5V . . . . . 500ns (Max)
6V . . . . . 400ns (Max)

Thermal Information

Package Thermal Impedance, θ_{JA} (see Note 1):
E (PDIP) Package . . . . . 67°C/W
M (SOIC) Package . . . . . 73°C/W
NS (SOP) Package . . . . . 64°C/W
PW (TSSOP) Package . . . . . 108°C/W
Maximum Junction Temperature (Hermetic Package or Die) . . . 175°C
Maximum Junction Temperature (Plastic Package) . . . . . 150°C
Maximum Storage Temperature Range . . . . . –65°C to 150°C
Maximum Lead Temperature (Soldering 10s) . . . . . 300°C
(SOIC - Lead Tips Only)

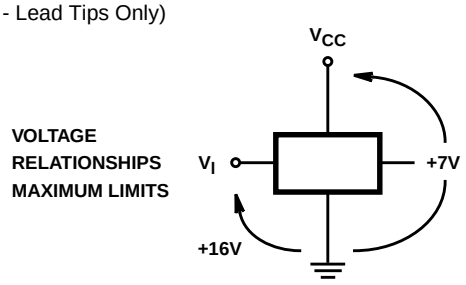

CAUTION: Stresses above those listed in "Absolute Maximum Ratings" may cause permanent damage to the device. This is a stress only rating and operation of the device at these or any other conditions above those indicated in the operational sections of this specification is not implied.

NOTE:

1. The package thermal impedance is calculated in accordance with JESD 51-7.

DC Electrical Specifications

PARAMETER	SYMBOL	TEST CONDITIONS V_I (V)	TEST CONDITIONS I_O (mA)	V_{CC} (V)	25°C MIN	25°C TYP	25°C MAX	–40°C TO 85°C MIN	–40°C TO 85°C MAX	–55°C TO 125°C MIN	–55°C TO 125°C MAX	UNITS
HC TYPES												
High Level Input Voltage	V_{IH}	-	-	2	1.5	-	-	1.5	-	1.5	-	V
				4.5	3.15	-	-	3.15	-	3.15	-	V
				6	4.2	-	-	4.2	-	4.2	-	V
Low Level Input Voltage	V_{IL}	-	-	2	-	-	0.5	-	0.5	-	0.5	V
				4.5	-	-	1.35	-	1.35	-	1.35	V
				6	-	-	1.8	-	1.8	-	1.8	V
High Level Output Voltage CMOS Loads	V_{OH}	V_{IH} or V_{IL}	–0.02	2	1.9	-	-	1.9	-	1.9	-	V
			–0.02	4.5	4.4	-	-	4.4	-	4.4	-	V
			–0.02	6	5.9	-	-	5.9	-	5.9	-	V
High Level Output Voltage TTL Loads			–4	4.5	3.98	-	-	3.84	-	3.7	-	V
			–5.2	6	5.48	-	-	5.34	-	5.2	-	V
Low Level Output Voltage CMOS Loads	V_{OL}	V_{IH} or V_{IL}	0.02	2	-	-	0.1	-	0.1	-	0.1	V
			0.02	4.5	-	-	0.1	-	0.1	-	0.1	V
			0.02	6	-	-	0.1	-	0.1	-	0.1	V
Low Level Output Voltage TTL Loads			4	4.5	-	-	0.26	-	0.33	-	0.4	V
			5.2	6	-	-	0.26	-	0.33	-	0.4	V
Input Leakage Current	I_I	V_{CC} or GND	-	6	-	-	±0.1	-	±1	-	±1	µA
		15	-	6	-	-	±0.5	-	±5	-	±5	

DC Electrical Specifications (Continued)

PARAMETER	SYMBOL	TEST CONDITIONS		V_{CC} (V)	25°C			−40°C TO 85°C		−55°C TO 125°C		UNITS
		V_I (V)	I_O (mA)		MIN	TYP	MAX	MIN	MAX	MIN	MAX	
Quiescent Device Current	I_{CC}	V_{CC} or GND	0	6	-	-	2	-	20	-	40	µA

Switching Specifications Input t_r, t_f = 6ns

PARAMETER	SYMBOL	TEST CONDITIONS	V_{CC} (V)	25°C			−40°C TO 85°C		−55°C TO 125°C		UNITS
				MIN	TYP	MAX	MIN	MAX	MIN	MAX	
HC TYPES											
Propagation Delay, nA to n$\overline{Y}$ HC4049 nA to nY HC4050	t_{PLH}, t_{PHL}	C_L = 50pF	2	-	-	85	-	105	-	130	ns
			4.5	-	-	17	-	21	-	26	ns
			6	-	-	14	-	18	-	22	ns
		C_L = 15pF	5	-	6	-	-	-	-	-	ns
Transition Times (Figure 1)	t_{TLH}, t_{THL}	C_L = 50pF	2	-	-	75	-	95	-	110	ns
			4.5	-	-	15	-	19	-	22	ns
			6	-	-	13	-	16	-	19	ns
Input Capacitance	C_I	-	-	-	-	10	-	10	-	10	pF
Power Dissipation Capacitance (Notes 2, 3)	C_{PD}	-	5	-	35	-	-	-	-	-	pF

NOTES:

2. C_{PD} is used to determine the dynamic power consumption, per gate.
3. $P_D = V_{CC}^2 f_i (C_{PD} + C_L)$ where f_i = Input Frequency, C_L = Output Load Capacitance, V_{CC} = Supply Voltage.

Test Circuit and Waveform

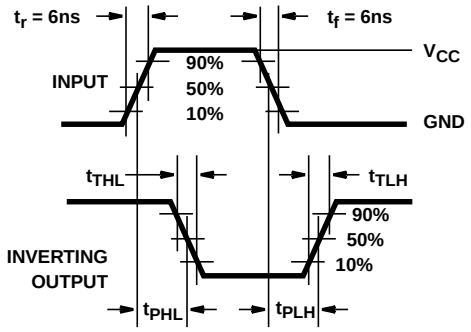

FIGURE 1. HC AND HCU TRANSITION TIMES AND PROPAGATION DELAY TIMES, COMBINATION LOGIC

PACKAGING INFORMATION

Orderable Device	Status (1)	Package Type	Package Drawing	Pins	Package Qty	Eco Plan (2)	Lead/ Ball Finish	MSL Peak Temp (3)	Samples (Requires Login)
5962-8681901EA	ACTIVE	CDIP	J	16	1	TBD	Call TI	Call TI	
5962-8682001EA	ACTIVE	CDIP	J	16	1	TBD	Call TI	Call TI	
CD54HC4049F3A	ACTIVE	CDIP	J	16	1	TBD	A42	N / A for Pkg Type	
CD54HC4050F3A	ACTIVE	CDIP	J	16	1	TBD	A42	N / A for Pkg Type	
CD74HC4049E	ACTIVE	PDIP	N	16	25	Pb-Free (RoHS)	CU NIPDAU	N / A for Pkg Type	
CD74HC4049EE4	ACTIVE	PDIP	N	16	25	Pb-Free (RoHS)	CU NIPDAU	N / A for Pkg Type	
CD74HC4049M	ACTIVE	SOIC	D	16	40	Green (RoHS & no Sb/Br)	CU NIPDAU	Level-1-260C-UNLIM	
CD74HC4049M96	ACTIVE	SOIC	D	16	2500	Green (RoHS & no Sb/Br)	CU NIPDAU	Level-1-260C-UNLIM	
CD74HC4049M96E4	ACTIVE	SOIC	D	16	2500	Green (RoHS & no Sb/Br)	CU NIPDAU	Level-1-260C-UNLIM	
CD74HC4049M96G4	ACTIVE	SOIC	D	16	2500	Green (RoHS & no Sb/Br)	CU NIPDAU	Level-1-260C-UNLIM	
CD74HC4049ME4	ACTIVE	SOIC	D	16	40	Green (RoHS & no Sb/Br)	CU NIPDAU	Level-1-260C-UNLIM	
CD74HC4049MG4	ACTIVE	SOIC	D	16	40	Green (RoHS & no Sb/Br)	CU NIPDAU	Level-1-260C-UNLIM	
CD74HC4049MT	ACTIVE	SOIC	D	16	250	Green (RoHS & no Sb/Br)	CU NIPDAU	Level-1-260C-UNLIM	
CD74HC4049MTE4	ACTIVE	SOIC	D	16	250	Green (RoHS & no Sb/Br)	CU NIPDAU	Level-1-260C-UNLIM	
CD74HC4049MTG4	ACTIVE	SOIC	D	16	250	Green (RoHS & no Sb/Br)	CU NIPDAU	Level-1-260C-UNLIM	
CD74HC4049NSR	ACTIVE	SO	NS	16	2000	Green (RoHS & no Sb/Br)	CU NIPDAU	Level-1-260C-UNLIM	
CD74HC4049NSRE4	ACTIVE	SO	NS	16	2000	Green (RoHS & no Sb/Br)	CU NIPDAU	Level-1-260C-UNLIM	
CD74HC4049NSRG4	ACTIVE	SO	NS	16	2000	Green (RoHS & no Sb/Br)	CU NIPDAU	Level-1-260C-UNLIM	
CD74HC4049PW	ACTIVE	TSSOP	PW	16	90	Green (RoHS & no Sb/Br)	CU NIPDAU	Level-1-260C-UNLIM	

Orderable Device	Status (1)	Package Type	Package Drawing	Pins	Package Qty	Eco Plan (2)	Lead/ Ball Finish	MSL Peak Temp (3)	Samples (Requires Login)
CD74HC4049PWE4	ACTIVE	TSSOP	PW	16	90	Green (RoHS & no Sb/Br)	CU NIPDAU	Level-1-260C-UNLIM	
CD74HC4049PWG4	ACTIVE	TSSOP	PW	16	90	Green (RoHS & no Sb/Br)	CU NIPDAU	Level-1-260C-UNLIM	
CD74HC4049PWR	ACTIVE	TSSOP	PW	16	2000	Green (RoHS & no Sb/Br)	CU NIPDAU	Level-1-260C-UNLIM	
CD74HC4049PWRE4	ACTIVE	TSSOP	PW	16	2000	Green (RoHS & no Sb/Br)	CU NIPDAU	Level-1-260C-UNLIM	
CD74HC4049PWRG4	ACTIVE	TSSOP	PW	16	2000	Green (RoHS & no Sb/Br)	CU NIPDAU	Level-1-260C-UNLIM	
CD74HC4049PWT	ACTIVE	TSSOP	PW	16	250	Green (RoHS & no Sb/Br)	CU NIPDAU	Level-1-260C-UNLIM	
CD74HC4049PWTE4	ACTIVE	TSSOP	PW	16	250	Green (RoHS & no Sb/Br)	CU NIPDAU	Level-1-260C-UNLIM	
CD74HC4049PWTG4	ACTIVE	TSSOP	PW	16	250	Green (RoHS & no Sb/Br)	CU NIPDAU	Level-1-260C-UNLIM	
CD74HC4050E	ACTIVE	PDIP	N	16	25	Pb-Free (RoHS)	CU NIPDAU	N / A for Pkg Type	
CD74HC4050EE4	ACTIVE	PDIP	N	16	25	Pb-Free (RoHS)	CU NIPDAU	N / A for Pkg Type	
CD74HC4050M	ACTIVE	SOIC	D	16	40	Green (RoHS & no Sb/Br)	CU NIPDAU	Level-1-260C-UNLIM	
CD74HC4050M96	ACTIVE	SOIC	D	16	2500	Green (RoHS & no Sb/Br)	CU NIPDAU	Level-1-260C-UNLIM	
CD74HC4050M96E4	ACTIVE	SOIC	D	16	2500	Green (RoHS & no Sb/Br)	CU NIPDAU	Level-1-260C-UNLIM	
CD74HC4050M96G4	ACTIVE	SOIC	D	16	2500	Green (RoHS & no Sb/Br)	CU NIPDAU	Level-1-260C-UNLIM	
CD74HC4050ME4	ACTIVE	SOIC	D	16	40	Green (RoHS & no Sb/Br)	CU NIPDAU	Level-1-260C-UNLIM	
CD74HC4050MG4	ACTIVE	SOIC	D	16	40	Green (RoHS & no Sb/Br)	CU NIPDAU	Level-1-260C-UNLIM	
CD74HC4050MT	ACTIVE	SOIC	D	16	250	Green (RoHS & no Sb/Br)	CU NIPDAU	Level-1-260C-UNLIM	
CD74HC4050MTE4	ACTIVE	SOIC	D	16	250	Green (RoHS & no Sb/Br)	CU NIPDAU	Level-1-260C-UNLIM	
CD74HC4050MTG4	ACTIVE	SOIC	D	16	250	Green (RoHS & no Sb/Br)	CU NIPDAU	Level-1-260C-UNLIM	

Orderable Device	Status (1)	Package Type	Package Drawing	Pins	Package Qty	Eco Plan (2)	Lead/ Ball Finish	MSL Peak Temp (3)	Samples (Requires Login)
CD74HC4050NSR	ACTIVE	SO	NS	16	2000	Green (RoHS & no Sb/Br)	CU NIPDAU	Level-1-260C-UNLIM	
CD74HC4050NSRE4	ACTIVE	SO	NS	16	2000	Green (RoHS & no Sb/Br)	CU NIPDAU	Level-1-260C-UNLIM	
CD74HC4050NSRG4	ACTIVE	SO	NS	16	2000	Green (RoHS & no Sb/Br)	CU NIPDAU	Level-1-260C-UNLIM	
CD74HC4050PW	ACTIVE	TSSOP	PW	16	90	Green (RoHS & no Sb/Br)	CU NIPDAU	Level-1-260C-UNLIM	
CD74HC4050PWE4	ACTIVE	TSSOP	PW	16	90	Green (RoHS & no Sb/Br)	CU NIPDAU	Level-1-260C-UNLIM	
CD74HC4050PWG4	ACTIVE	TSSOP	PW	16	90	Green (RoHS & no Sb/Br)	CU NIPDAU	Level-1-260C-UNLIM	
CD74HC4050PWR	ACTIVE	TSSOP	PW	16	2000	Green (RoHS & no Sb/Br)	CU NIPDAU	Level-1-260C-UNLIM	
CD74HC4050PWRE4	ACTIVE	TSSOP	PW	16	2000	Green (RoHS & no Sb/Br)	CU NIPDAU	Level-1-260C-UNLIM	
CD74HC4050PWRG4	ACTIVE	TSSOP	PW	16	2000	Green (RoHS & no Sb/Br)	CU NIPDAU	Level-1-260C-UNLIM	
CD74HC4050PWT	ACTIVE	TSSOP	PW	16	250	Green (RoHS & no Sb/Br)	CU NIPDAU	Level-1-260C-UNLIM	
CD74HC4050PWTE4	ACTIVE	TSSOP	PW	16	250	Green (RoHS & no Sb/Br)	CU NIPDAU	Level-1-260C-UNLIM	
CD74HC4050PWTG4	ACTIVE	TSSOP	PW	16	250	Green (RoHS & no Sb/Br)	CU NIPDAU	Level-1-260C-UNLIM	

(1) The marketing status values are defined as follows:
ACTIVE: Product device recommended for new designs.
LIFEBUY: TI has announced that the device will be discontinued, and a lifetime-buy period is in effect.
NRND: Not recommended for new designs. Device is in production to support existing customers, but TI does not recommend using this part in a new design.
PREVIEW: Device has been announced but is not in production. Samples may or may not be available.
OBSOLETE: TI has discontinued the production of the device.

(2) Eco Plan - The planned eco-friendly classification: Pb-Free (RoHS), Pb-Free (RoHS Exempt), or Green (RoHS & no Sb/Br) - please check http://www.ti.com/productcontent for the latest availability information and additional product content details.
TBD: The Pb-Free/Green conversion plan has not been defined.
Pb-Free (RoHS): TI's terms "Lead-Free" or "Pb-Free" mean semiconductor products that are compatible with the current RoHS requirements for all 6 substances, including the requirement that lead not exceed 0.1% by weight in homogeneous materials. Where designed to be soldered at high temperatures, TI Pb-Free products are suitable for use in specified lead-free processes.

Pb-Free (RoHS Exempt): This component has a RoHS exemption for either 1) lead-based flip-chip solder bumps used between the die and package, or 2) lead-based die adhesive used between the die and leadframe. The component is otherwise considered Pb-Free (RoHS compatible) as defined above.
Green (RoHS & no Sb/Br): TI defines "Green" to mean Pb-Free (RoHS compatible), and free of Bromine (Br) and Antimony (Sb) based flame retardants (Br or Sb do not exceed 0.1% by weight in homogeneous material)

(3) MSL, Peak Temp. -- The Moisture Sensitivity Level rating according to the JEDEC industry standard classifications, and peak solder temperature.

Important Information and Disclaimer: The information provided on this page represents TI's knowledge and belief as of the date that it is provided. TI bases its knowledge and belief on information provided by third parties, and makes no representation or warranty as to the accuracy of such information. Efforts are underway to better integrate information from third parties. TI has taken and continues to take reasonable steps to provide representative and accurate information but may not have conducted destructive testing or chemical analysis on incoming materials and chemicals. TI and TI suppliers consider certain information to be proprietary, and thus CAS numbers and other limited information may not be available for release.

In no event shall TI's liability arising out of such information exceed the total purchase price of the TI part(s) at issue in this document sold by TI to Customer on an annual basis.

OTHER QUALIFIED VERSIONS OF CD54HC4049, CD54HC4050, CD74HC4049, CD74HC4050 :

- Catalog: CD74HC4049, CD74HC4050
- Military: CD54HC4049, CD54HC4050

NOTE: Qualified Version Definitions:

- Catalog - TI's standard catalog product
- Military - QML certified for Military and Defense Applications

TAPE AND REEL INFORMATION

REEL DIMENSIONS

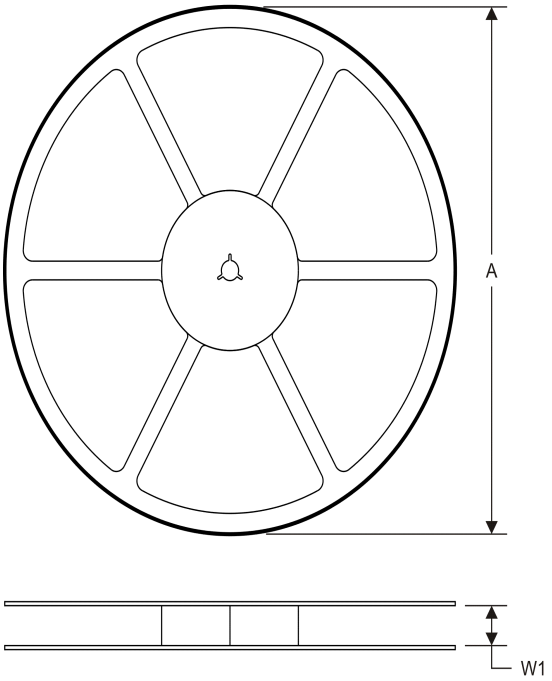

TAPE DIMENSIONS

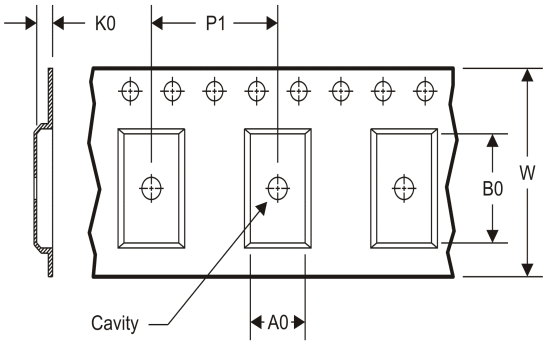

A0	Dimension designed to accommodate the component width
B0	Dimension designed to accommodate the component length
K0	Dimension designed to accommodate the component thickness
W	Overall width of the carrier tape
P1	Pitch between successive cavity centers

TAPE AND REEL INFORMATION

*All dimensions are nominal

Device	Package Type	Package Drawing	Pins	SPQ	Reel Diameter (mm)	Reel Width W1 (mm)	A0 (mm)	B0 (mm)	K0 (mm)	P1 (mm)	W (mm)	Pin1 Quadrant
CD74HC4049M96	SOIC	D	16	2500	330.0	16.4	6.5	10.3	2.1	8.0	16.0	Q1
CD74HC4049NSR	SO	NS	16	2000	330.0	16.4	8.2	10.5	2.5	12.0	16.0	Q1
CD74HC4049PWR	TSSOP	PW	16	2000	330.0	12.4	6.9	5.6	1.6	8.0	12.0	Q1
CD74HC4049PWT	TSSOP	PW	16	250	330.0	12.4	6.9	5.6	1.6	8.0	12.0	Q1
CD74HC4050M96	SOIC	D	16	2500	330.0	16.4	6.5	10.3	2.1	8.0	16.0	Q1
CD74HC4050NSR	SO	NS	16	2000	330.0	16.4	8.2	10.5	2.5	12.0	16.0	Q1
CD74HC4050PWR	TSSOP	PW	16	2000	330.0	12.4	6.9	5.6	1.6	8.0	12.0	Q1
CD74HC4050PWT	TSSOP	PW	16	250	330.0	12.4	6.9	5.6	1.6	8.0	12.0	Q1

TAPE AND REEL BOX DIMENSIONS

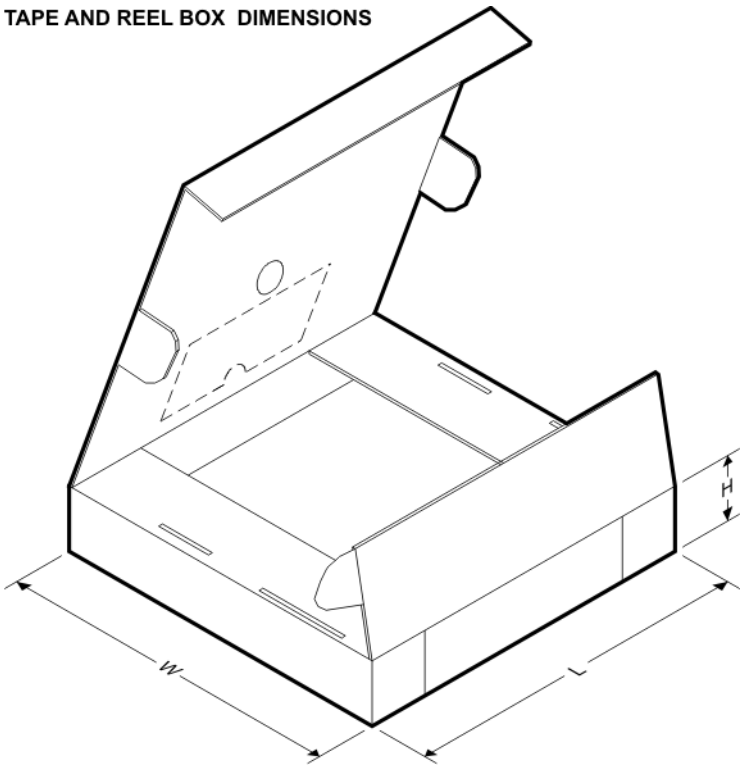

*All dimensions are nominal

Device	Package Type	Package Drawing	Pins	SPQ	Length (mm)	Width (mm)	Height (mm)
CD74HC4049M96	SOIC	D	16	2500	333.2	345.9	28.6
CD74HC4049NSR	SO	NS	16	2000	367.0	367.0	38.0
CD74HC4049PWR	TSSOP	PW	16	2000	367.0	367.0	35.0
CD74HC4049PWT	TSSOP	PW	16	250	367.0	367.0	35.0
CD74HC4050M96	SOIC	D	16	2500	333.2	345.9	28.6
CD74HC4050NSR	SO	NS	16	2000	367.0	367.0	38.0
CD74HC4050PWR	TSSOP	PW	16	2000	367.0	367.0	35.0
CD74HC4050PWT	TSSOP	PW	16	250	367.0	367.0	35.0

IMPORTANT NOTICE

Texas Instruments Incorporated and its subsidiaries (TI) reserve the right to make corrections, enhancements, improvements and other changes to its semiconductor products and services per JESD46C and to discontinue any product or service per JESD48B. Buyers should obtain the latest relevant information before placing orders and should verify that such information is current and complete. All semiconductor products (also referred to herein as “components”) are sold subject to TI’s terms and conditions of sale supplied at the time of order acknowledgment.

TI warrants performance of its components to the specifications applicable at the time of sale, in accordance with the warranty in TI’s terms and conditions of sale of semiconductor products. Testing and other quality control techniques are used to the extent TI deems necessary to support this warranty. Except where mandated by applicable law, testing of all parameters of each component is not necessarily performed.

TI assumes no liability for applications assistance or the design of Buyers’ products. Buyers are responsible for their products and applications using TI components. To minimize the risks associated with Buyers’ products and applications, Buyers should provide adequate design and operating safeguards.

TI does not warrant or represent that any license, either express or implied, is granted under any patent right, copyright, mask work right, or other intellectual property right relating to any combination, machine, or process in which TI components or services are used. Information published by TI regarding third-party products or services does not constitute a license to use such products or services or a warranty or endorsement thereof. Use of such information may require a license from a third party under the patents or other intellectual property of the third party, or a license from TI under the patents or other intellectual property of TI.

Reproduction of significant portions of TI information in TI data books or data sheets is permissible only if reproduction is without alteration and is accompanied by all associated warranties, conditions, limitations, and notices. TI is not responsible or liable for such altered documentation. Information of third parties may be subject to additional restrictions.

Resale of TI components or services with statements different from or beyond the parameters stated by TI for that component or service voids all express and any implied warranties for the associated TI component or service and is an unfair and deceptive business practice. TI is not responsible or liable for any such statements.

Buyer acknowledges and agrees that it is solely responsible for compliance with all legal, regulatory and safety-related requirements concerning its products, and any use of TI components in its applications, notwithstanding any applications-related information or support that may be provided by TI. Buyer represents and agrees that it has all the necessary expertise to create and implement safeguards which anticipate dangerous consequences of failures, monitor failures and their consequences, lessen the likelihood of failures that might cause harm and take appropriate remedial actions. Buyer will fully indemnify TI and its representatives against any damages arising out of the use of any TI components in safety-critical applications.

In some cases, TI components may be promoted specifically to facilitate safety-related applications. With such components, TI’s goal is to help enable customers to design and create their own end-product solutions that meet applicable functional safety standards and requirements. Nonetheless, such components are subject to these terms.

No TI components are authorized for use in FDA Class III (or similar life-critical medical equipment) unless authorized officers of the parties have executed a special agreement specifically governing such use.

Only those TI components which TI has specifically designated as military grade or “enhanced plastic” are designed and intended for use in military/aerospace applications or environments. Buyer acknowledges and agrees that any military or aerospace use of TI components which have ***not*** been so designated is solely at the Buyer's risk, and that Buyer is solely responsible for compliance with all legal and regulatory requirements in connection with such use.

TI has specifically designated certain components which meet ISO/TS16949 requirements, mainly for automotive use. Components which have not been so designated are neither designed nor intended for automotive use; and TI will not be responsible for any failure of such components to meet such requirements.

Products		**Applications**	
Audio	www.ti.com/audio	Automotive and Transportation	www.ti.com/automotive
Amplifiers	amplifier.ti.com	Communications and Telecom	www.ti.com/communications
Data Converters	dataconverter.ti.com	Computers and Peripherals	www.ti.com/computers
DLP® Products	www.dlp.com	Consumer Electronics	www.ti.com/consumer-apps
DSP	dsp.ti.com	Energy and Lighting	www.ti.com/energy
Clocks and Timers	www.ti.com/clocks	Industrial	www.ti.com/industrial
Interface	interface.ti.com	Medical	www.ti.com/medical
Logic	logic.ti.com	Security	www.ti.com/security
Power Mgmt	power.ti.com	Space, Avionics and Defense	www.ti.com/space-avionics-defense
Microcontrollers	microcontroller.ti.com	Video and Imaging	www.ti.com/video
RFID	www.ti-rfid.com		
OMAP Mobile Processors	www.ti.com/omap	**TI E2E Community**	e2e.ti.com
Wireless Connectivity	www.ti.com/wirelessconnectivity		

Mailing Address: Texas Instruments, Post Office Box 655303, Dallas, Texas 75265
Copyright © 2012, Texas Instruments Incorporated

НИОКР СИСТЕМС

ООО «НИОКРсистемс» - это оперативные поставки широкого спектра электронных компонентов отечественного и импортного производства напрямую от производителей и с крупнейших мировых складов. Реализуемая нашей компанией продукция насчитывает более полумиллиона наименований.

Благодаря этому наша компания предлагает к поставке практически не ограниченный ассортимент компонентов как оптовыми, мелкооптовыми партиями, так и в розницу.

Благодаря развитой сети поставщиков, помогаем в поиске и приобретении экзотичных или снятых с производства компонентов.

Наша компания это:

- Гарантия качества поставляемой продукции
- Широкий ассортимент
- Минимальные сроки поставок
- Техническая поддержка
- Подбор комплектации
- Индивидуальный подход
- Гибкое ценообразование
- Работаем по 275 ФЗ

ООО «НИОКР СИТЕМС»
Москва, 125362, Россия, ул. Вишневая, д. 9, к. 1, Блок 104 а и 104 в

Телефон: 8 (495) 268-14-82
Email: n@nsistems.ru

ИНН: 7735154786
ОГРН: 1167746717709