DATA SHEET

74ALVT162244

2.5V/3.3V 16-bit buffer/driver with 30Ω termination resistors (3-State)

Product specification
Supersedes data of 1998 Feb 13
IC23 Data Handbook

1998 Oct 07

Philips
Semiconductors

PHILIPS

2.5V/3.3V 16-bit buffer/driver with 30Ω termination resistors (3-State)

74ALVT162244

FEATURES

- 16-bit bus interface
- 3-State buffers
- 5V I/O compatibile
- Output capability: +12mA/-12mA
- TTL input and output switching levels
- Input and output interface capability to systems at 5V supply
- Bus-hold data inputs eliminate the need for external pull-up resistors to hold unused inputs
- Live insertion/extraction permitted
- Outputs include series resistance of 30Ω making external terminating resistors unnecessary
- Power-up 3-State
- No bus current loading when output is tied to 5V bus
- Latch-up protection exceeds 500mA per JEDEC Std 17
- ESD protection exceeds 2000V per MIL STD 883 Method 3015 and 200V per Machine Model

DESCRIPTION

The 74ALVT162244 is a high-performance BiCMOS product designed for V_{CC} operation at 2.5V or 3.3V with I/O compatibility up to 5V.

The 74ALVT162244 is designed with 30Ω series resistance in both the High and Low states of the output. This design reduces line noise in applications such as memory address drivers, clock drivers, and bus receivers/transmitters.

This device is a 16-bit buffer and line driver featuring non-inverting 3-State bus outputs. The device can be used as four 4-bit buffers, two 8-bit buffers, or one 16-bit buffer.

QUICK REFERENCE DATA

SYMBOL	PARAMETER	CONDITIONS T_{amb} = 25°C	TYPICAL		UNIT
			2.5V	3.3V	
t_{PLH} t_{PHL}	Propagation delay nAx to nYx	C_L = 50pF	2.7 2.3	2.2 2.2	ns
C_{IN}	Input capacitance DIR, $\overline{OE}$	V_I = 0V or V_{CC}	3	3	pF
C_{Out}	Output capacitance	$V_{I/O}$ = 0V or V_{CC}	9	9	pF
I_{CCZ}	Total supply current	Outputs disabled	40	70	µA

ORDERING INFORMATION

PACKAGES	TEMPERATURE RANGE	OUTSIDE NORTH AMERICA	NORTH AMERICA	DWG NUMBER
48-Pin Plastic SSOP Type III	–40°C to +85°C	74ALVT162244 DL	AV162244 DL	SOT370-1
48-Pin Plastic TSSOP Type II	–40°C to +85°C	74ALVT162244 DGG	AV162244 DGG	SOT362-1

LOGIC SYMBOL

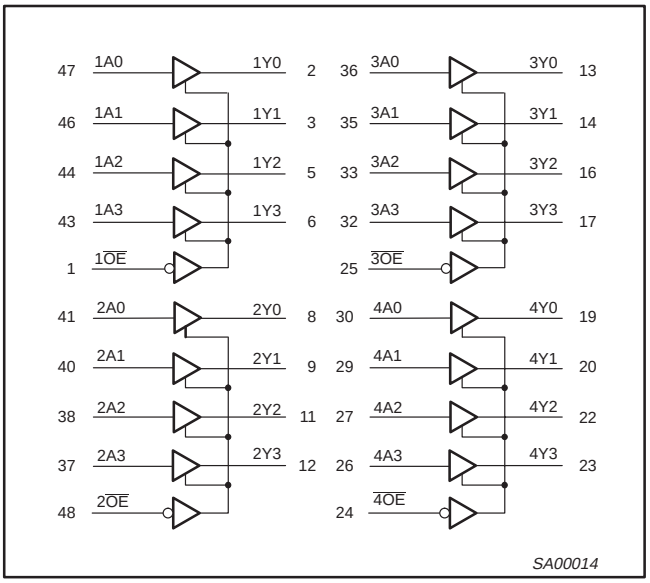

PIN DESCRIPTION

PIN NUMBER	SYMBOL	NAME AND FUNCTION
47, 46, 44, 43 41, 40, 38, 37 36, 35, 33, 32 30, 29, 27, 26	1A0 - 1A3, 2A0 - 2A3, 3A0 - 3A3, 4A0 - 4A3	Data inputs
2, 3, 5, 6 8, 9, 11, 12 13, 14, 16, 17 19, 20, 22, 23	1Y0 - 1Y3, 2Y0 - 2Y3, 3Y0 - 3Y3, 4Y0 - 4Y3	Data outputs
1, 48 25, 24	$1\overline{OE}$, $2\overline{OE}$, $3\overline{OE}$, $4\overline{OE}$	Output enables
4, 10, 15, 21 28, 34, 39, 45	GND	Ground (0V)
7, 18, 31, 42	V_{CC}	Positive supply voltage

LOGIC SYMBOL (IEEE/IEC)

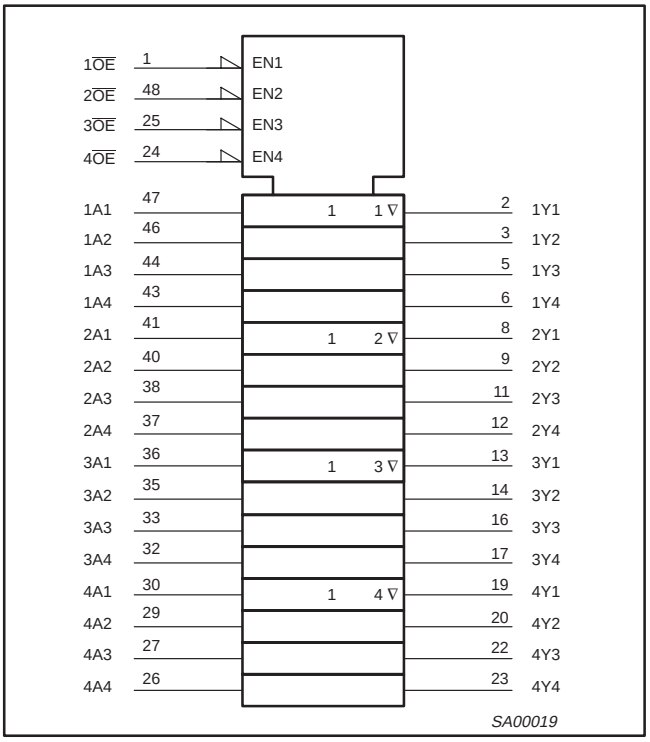

SCHEMATIC OF EACH OUTPUT

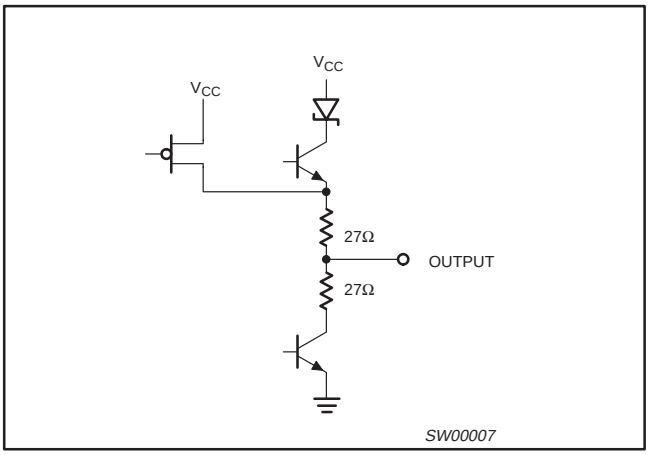

PIN CONFIGURATION

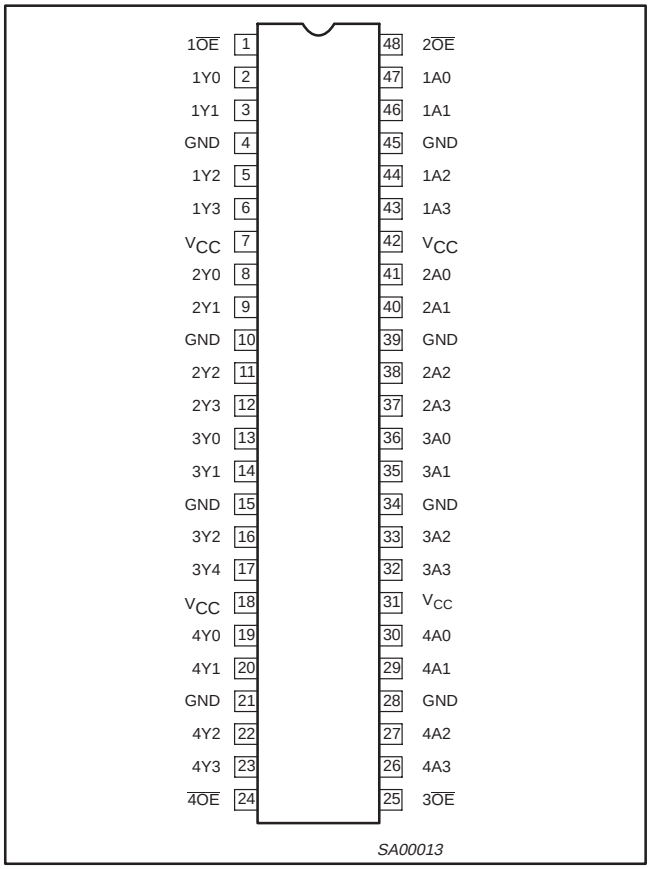

FUNCTION TABLE

INPUTS		OUTPUTS
nOE	**nAx**	**nYx**
L	L	L
L	H	H
H	X	Z

H = High voltage level
L = Low voltage level
X = Don't care
Z = High Impedance "off" state

ABSOLUTE MAXIMUM RATINGS[1, 2]

SYMBOL	PARAMETER	CONDITIONS	RATING	UNIT
V_{CC}	DC supply voltage		-0.5 to +4.6	V
I_{IK}	DC input diode current	$V_I < 0$	-50	mA
V_I	DC input voltage[3]		-0.5 to +7.0	V
I_{OK}	DC output diode current	$V_O < 0$	-50	mA
V_{OUT}	DC output voltage[3]	Output in Off or High state	-0.5 to +7.0	V
I_{OUT}	DC output current	Output in Low state	128	mA
		Output in High state	-64	
T_{stg}	Storage temperature range		-65 to +150	°C

NOTES:

1. Stresses beyond those listed may cause permanent damage to the device. These are stress ratings only and functional operation of the device at these or any other conditions beyond those indicated under “recommended operating conditions” is not implied. Exposure to absolute-maximum-rated conditions for extended periods may affect device reliability.
2. The performance capability of a high-performance integrated circuit in conjunction with its thermal environment can create junction temperatures which are detrimental to reliability. The maximum junction temperature of this integrated circuit should not exceed 150°C.
3. The input and output negative voltage ratings may be exceeded if the input and output clamp current ratings are observed.

RECOMMENDED OPERATING CONDITIONS

SYMBOL	PARAMETER	2.5V RANGE LIMITS		3.3V RANGE LIMITS		UNIT
		MIN	MAX	MIN	MAX	
V_{CC}	DC supply voltage	2.3	2.7	3.0	3.6	V
V_I	Input voltage	0	5.5	0	5.5	V
V_{IH}	High-level input voltage	1.7		2.0		V
V_{IL}	Input voltage		0.7		0.8	V
I_{OH}	High-level output current		–8		–12	mA
I_{OL}	Low-level output current		12		12	mA
$\Delta t/\Delta v$	Input transition rise or fall rate; Outputs enabled		10		10	ns/V
T_{amb}	Operating free-air temperature range	–40	+85	–40	+85	°C

DC ELECTRICAL CHARACTERISTICS (3.3V ±0.3V RANGE)

SYMBOL	PARAMETER	TEST CONDITIONS		LIMITS Temp = -40°C to +85°C MIN	TYP[1]	MAX	UNIT
V_{IK}	Input clamp voltage	V_{CC} = 3.0V; I_{IK} = –18mA			–0.85	–1.2	V
V_{OH}	High-level output voltage	V_{CC} = 3.0V; I_{OH} = –12mA		2.0	2.5		V
V_{OL}	Low–level output voltage	V_{CC} = 3.0V; I_{OL} = 12mA			0.5	0.8	V
I_I	Input leakage current	V_{CC} = 3.6V; V_I = V_{CC} or GND	Control pins		0.1	±1	µA
		V_{CC} = 0 or 3.6V; V_I = 5.5V			01.	10	µA
		V_{CC} = 3.6V; V_I = V_{CC}	Data pins[4]		0.5	1	µA
		V_{CC} = 3.6V; V_I = 0V			0.1	-5	µA
I_{OFF}	Off current	V_{CC} = 0V; V_I or V_O = 0 to 4.5V			0.1	±100	µA
I_{HOLD}	Bus Hold current Data inputs[6]	V_{CC} = 3V; V_I = 0.8V		75	130		µA
		V_{CC} = 3V; V_I = 2.0V		–75	–140		µA
		V_{CC} = 0V to 3.6V; V_{CC} = 3.6V		±500			µA
I_{EX}	Current into an output in the High state when $V_O > V_{CC}$	V_O = 5.5V; V_{CC} = 3.0V			10	125	µA
$I_{PU/PD}$	Power up/down 3-State output current[3]	$V_{CC} \leq 1.2$V; V_O = 0.5V to V_{CC}; V_I = GND or V_{CC} $\overline{OE}$/$\overline{OE}$ = Don't care			1	±100	µA
I_{OZH}	3-State output High current	V_{CC} = 3.6V; V_O = 3.0V; V_I = V_{IL} or V_{IH}			0.5	5	µA
I_{OZL}	3-State output Low current	V_{CC} = 3.6V; V_O = 0.5V; V_I = V_{IL} or V_{IH}			0.5	–5	µA
I_{CCH}	Quiescent supply current	V_{CC} = 3.6V; Outputs High, V_I = GND or V_{CC}, I_O = 0			0.05	0.1	mA
I_{CCL}		V_{CC} = 3.6V; Outputs Low, V_I = GND or V_{CC}, I_O = 0			3.7	5.0	mA
I_{CCZ}		V_{CC} = 3.6V; Outputs Disabled; V_I = GND or V_{CC}, I_O = 0[5]			0.06	0.1	mA
ΔI_{CC}	Additional supply current per input pin[2]	V_{CC} = 3V to 3.6V; One input at V_{CC}–0.6V, Other inputs at V_{CC} or GND			0.05	0.4	mA

NOTES:
1. All typical values are at V_{CC} = 3.3V and T_{amb} = 25°C.
2. This is the increase in supply current for each input at the specified voltage level other than V_{CC} or GND
3. This parameter is valid for any V_{CC} between 0V and 1.2V with a transition time of up to 10msec. From V_{CC} = 1.2V to V_{CC} = 3.3V ± 0.3V a transition time of 100µsec is permitted. This parameter is valid for T_{amb} = 25°C only.
4. Unused pins at V_{CC} or GND.
5. I_{CCZ} is measured with outputs pulled up to V_{CC} or pulled down to ground.
6. This is the bus hold overdrive current required to force the input to the opposite logic state.

AC CHARACTERISTICS (3.3V ±0.3V RANGE)

GND = 0V; t_R = t_F = 2.5ns; C_L = 50pF; R_L = 500Ω; T_{amb} = –40°C to +85°C.

SYMBOL	PARAMETER	WAVEFORM	LIMITS V_{CC} = 3.3V ±0.3V MIN	TYP[1]	MAX	UNIT
t_{PLH} t_{PHL}	Propagation delay nAx to nBx or nBx to nAx	1	1.0 1.0	2.2 2.2	3.3 3.3	ns
t_{PZH} t_{PZL}	Output enable time to High and Low level	2	1.5 1.5	3.2 2.4	4.9 3.7	ns
t_{PHZ} t_{PLZ}	Output disable time from High and Low Level	2	1.5 1.5	3.1 2.5	4.7 4.1	ns

NOTE:
1. All typical values are at V_{CC} = 3.3V and T_{amb} = 25°C.

DC ELECTRICAL CHARACTERISTICS (2.5V ±0.2V RANGE)

SYMBOL	PARAMETER	TEST CONDITIONS		LIMITS Temp = -40°C to +85°C MIN	TYP[1]	MAX	UNIT
V_{IK}	Input clamp voltage	V_{CC} = 2.3V; I_{IK} = –18mA			–0.85	–1.2	V
V_{OH}	High-level output voltage	V_{CC} = 2.3V; I_{OH} = –8mA		1.7			V
V_{OL}	Low-level output voltage	V_{CC} = 2.3V; I_{OL} = 12mA			0.6	0.7	V
I_I	Input leakage current	V_{CC} = 2.7V; V_I = V_{CC} or GND	Control pins		0.1	±1	µA
		V_{CC} = 0 or 2.7V; V_I = 5.5V			0.1	10	µA
		V_{CC} = 2.7V; V_I = V_{CC}	Data pins[4]		0.1	1	µA
		V_{CC} = 2.7V; V_I = 0			0.1	-5	µA
I_{OFF}	Off current	V_{CC} = 0V; V_I or V_O = 0 to 4.5V			0.1	±100	µA
I_{HOLD}	Bus Hold current Data inputs[6]	V_{CC} = 2.3V; V_I = 0.7V			115		µA
		V_{CC} = 2.3V; V_I = 1.7V			–10		µA
I_{EX}	Current into an output in the High state when V_O > V_{CC}	V_O = 5.5V; V_{CC} = 2.3V			10	125	µA
$I_{PU/PD}$	Power up/down 3-State output current[3]	$V_{CC} \leq$ 1.2V; V_O = 0.5V to V_{CC}; V_I = GND or V_{CC}; $\overline{OE}$/OE = Don't care			1	±100	µA
I_{OZH}	3-State output High current	V_{CC} = 2.7V; V_O = 2.3V; V_I = V_{IL} or V_{IH}			0.5	5	µA
I_{OZL}	3-State output Low current	V_{CC} = 2.7V; V_O = 0.5V; V_I = V_{IL} or V_{IH}			0.5	–5	µA
I_{CCH}	Quiescent supply current	V_{CC} = 2.7V; Outputs High, V_I = GND or V_{CC}, I_O = 0			0.04	0.1	mA
I_{CCL}		V_{CC} = 2.7V; Outputs Low, V_I = GND or V_{CC}, I_O = 0			2.5	4.5	mA
I_{CCZ}		V_{CC} = 2.7V; Outputs Disabled; V_I = GND or V_{CC}, I_O = 0[5]			0.04	0.1	mA
ΔI_{CC}	Additional supply current per input pin[2]	V_{CC} = 2.3V to 2.7V; One input at V_{CC}–0.6V, Other inputs at V_{CC} or GND			0.04	0.4	mA

NOTES:
1. All typical values are at V_{CC} = 2.5V and T_{amb} = 25°C.
2. This is the increase in supply current for each input at the specified voltage level other than V_{CC} or GND
3. This parameter is valid for any V_{CC} between 0V and 1.2V with a transition time of up to 10msec. From V_{CC} = 1.2V to V_{CC} = 2.5V ± 0.2V a transition time of 100µsec is permitted. This parameter is valid for T_{amb} = 25°C only.
4. Unused pins at V_{CC} or GND.
5. I_{CCZ} is measured with outputs pulled up to V_{CC} or pulled down to ground.
6. Not guaranteed.

AC CHARACTERISTICS (2.5V ±0.2V RANGE)

GND = 0V; t_R = t_F = 2.5ns; C_L = 50pF; R_L = 500Ω; T_{amb} = –40°C to +85°C.

SYMBOL	PARAMETER	WAVEFORM	LIMITS V_{CC} = 2.5V ±0.2V MIN	TYP[1]	MAX	UNIT
t_{PLH} t_{PHL}	Propagation delay nAx to nBx or nBx to nAx	1	1.5 1.5	2.7 2.3	4.2 3.7	ns
t_{PZH} t_{PZL}	Output enable time to High and Low level	2	2.0 2.0	4.4 3.0	6.8 5.1	ns
t_{PHZ} t_{PLZ}	Output disable time from High and Low Level	2	1.0 1.0	2.8 2.0	4.6 3.3	ns

NOTE:
1. All typical values are at V_{CC} = 2.5V and T_{amb} = 25°C.

AC WAVEFORMS

V_M = 1.5V at $V_{CC} \geq$ 3.0V; $V_M = V_{CC}/2$ at $V_{CC} \leq$ 2.7V
$V_X = V_{OL}$ + 0.3V at $V_{CC} \geq$ 3.0V; $V_X = V_{OL}$ + 0.15V at $V_{CC} \leq$ 2.7V
$V_Y = V_{OH}$ – 0.3V at $V_{CC} \geq$ 3.0V; $V_Y = V_{OH}$ – 0.15V at $V_{CC} \leq$ 2.7V

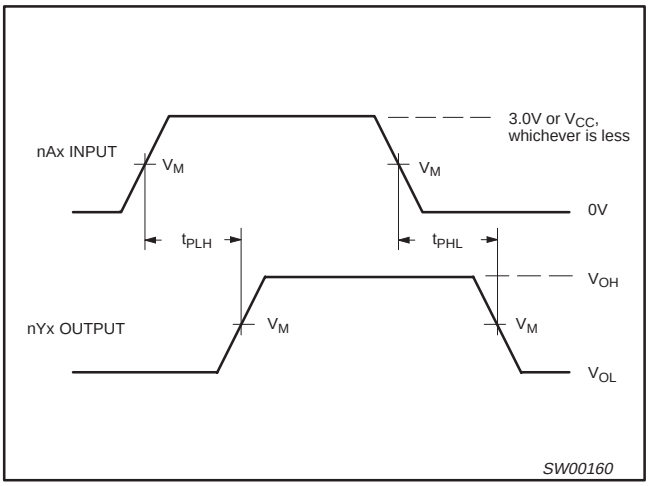

Waveform 1. Input (nAx) to Output (nYx) Propagation Delays

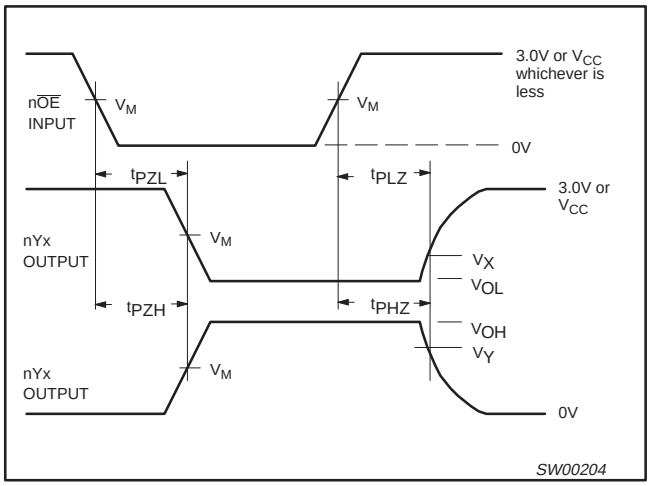

Waveform 2. 3-State Output Enable and Disable Times

TEST CIRCUIT AND WAVEFORMS

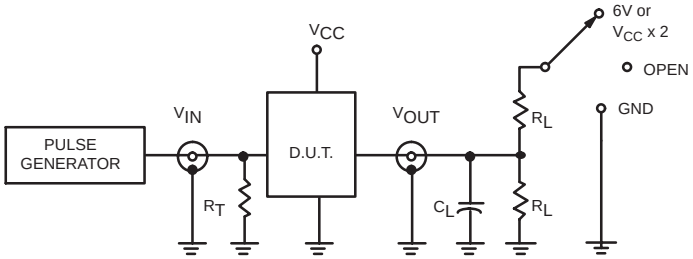

Test Circuit for 3-State Outputs

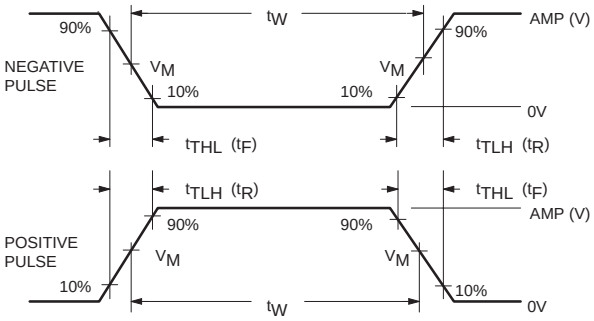

V_M = 1.5V or V_{CC} / 2, whichever is less
Input Pulse Definition

SWITCH POSITION

TEST	SWITCH
t_{PHZ}/t_{PZH}	GND
t_{PLZ}/t_{PZL}	6V or V_{CC} x 2
t_{PLH}/t_{PHL}	open

DEFINITIONS

R_L = Load resistor; see AC CHARACTERISTICS for value.

C_L = Load capacitance includes jig and probe capacitance; see AC CHARACTERISTICS for value.

R_T = Termination resistance should be equal to Z_{OUT} of pulse generators.

FAMILY	INPUT PULSE REQUIREMENTS				
	Amplitude	Rep. Rate	t_W	t_R	t_F
74ALVT16	3.0V or V_{CC} whichever is less	≤10MHz	500ns	≤2.5ns	≤2.5ns

SW00162

SSOP48: plastic shrink small outline package; 48 leads; body width 7.5 mm **SOT370-1**

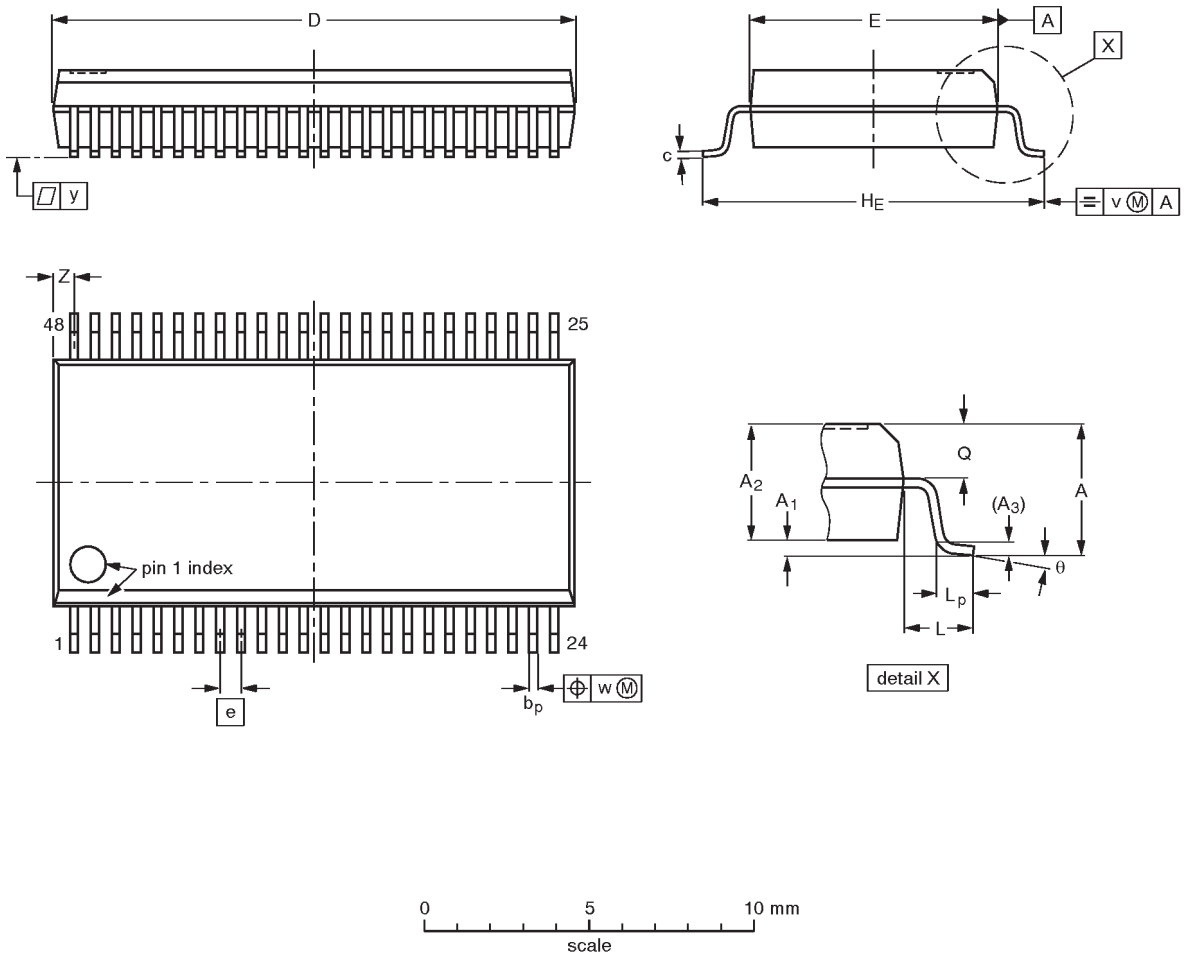

DIMENSIONS (mm are the original dimensions)

UNIT	A max.	A_1	A_2	A_3	b_p	c	D (1)	E (1)	e	H_E	L	L_p	Q	v	w	y	Z (1)	θ
mm	2.8	0.4 0.2	2.35 2.20	0.25	0.3 0.2	0.22 0.13	16.00 15.75	7.6 7.4	0.635	10.4 10.1	1.4	1.0 0.6	1.2 1.0	0.25	0.18	0.1	0.85 0.40	8° 0°

Note

1. Plastic or metal protrusions of 0.25 mm maximum per side are not included.

OUTLINE VERSION	REFERENCES				EUROPEAN PROJECTION	ISSUE DATE
	IEC	JEDEC	EIAJ			
SOT370-1		MO-118AA				~~93-11-02~~ 95-02-04

TSSOP48: plastic thin shrink small outline package; 48 leads; body width 6.1mm **SOT362-1**

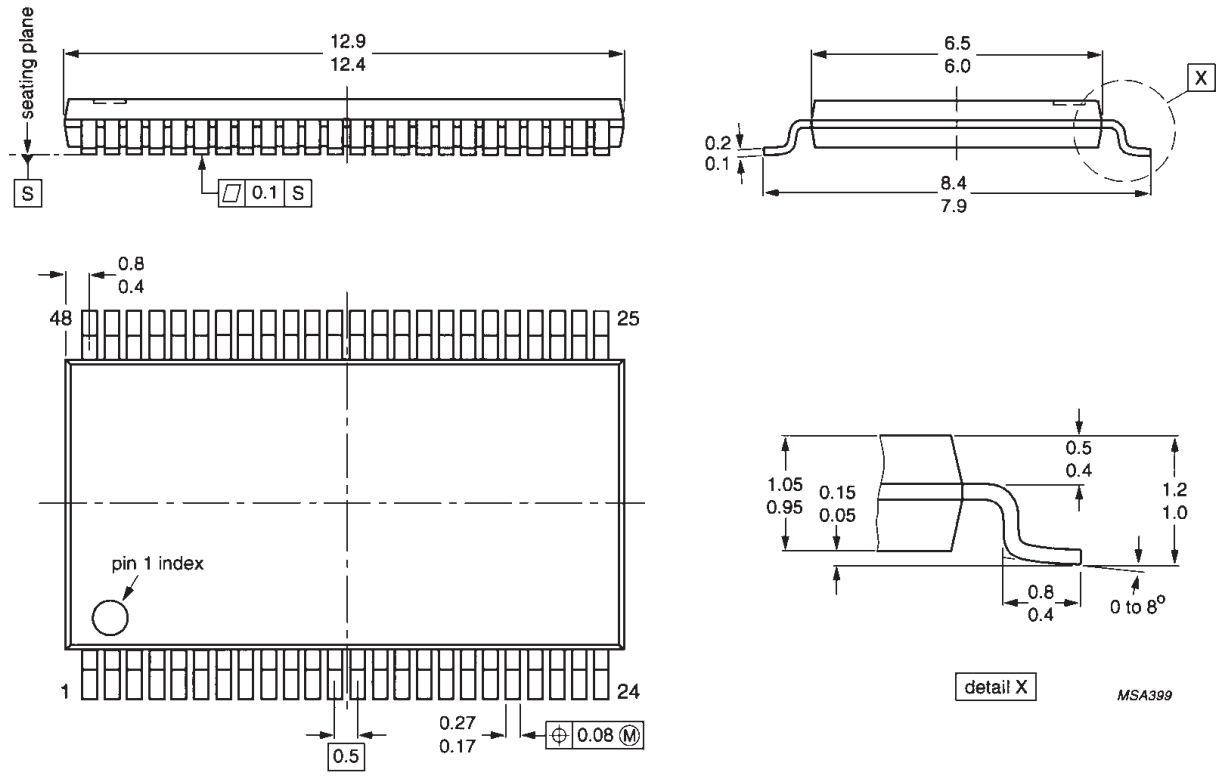

Dimensions in mm.

Data sheet status

Data sheet status	Product status	Definition [1]
Objective specification	Development	This data sheet contains the design target or goal specifications for product development. Specification may change in any manner without notice.
Preliminary specification	Qualification	This data sheet contains preliminary data, and supplementary data will be published at a later date. Philips Semiconductors reserves the right to make chages at any time without notice in order to improve design and supply the best possible product.
Product specification	Production	This data sheet contains final specifications. Philips Semiconductors reserves the right to make changes at any time without notice in order to improve design and supply the best possible product.

[1] Please consult the most recently issued datasheet before initiating or completing a design.

Definitions

Short-form specification — The data in a short-form specification is extracted from a full data sheet with the same type number and title. For detailed information see the relevant data sheet or data handbook.

Limiting values definition — Limiting values given are in accordance with the Absolute Maximum Rating System (IEC 134). Stress above one or more of the limiting values may cause permanent damage to the device. These are stress ratings only and operation of the device at these or at any other conditions above those given in the Characteristics sections of the specification is not implied. Exposure to limiting values for extended periods may affect device reliability.

Application information — Applications that are described herein for any of these products are for illustrative purposes only. Philips Semiconductors make no representation or warranty that such applications will be suitable for the specified use without further testing or modification.

Disclaimers

Life support — These products are not designed for use in life support appliances, devices or systems where malfunction of these products can reasonably be expected to result in personal injury. Philips Semiconductors customers using or selling these products for use in such applications do so at their own risk and agree to fully indemnify Philips Semiconductors for any damages resulting from such application.

Right to make changes — Philips Semiconductors reserves the right to make changes, without notice, in the products, including circuits, standard cells, and/or software, described or contained herein in order to improve design and/or performance. Philips Semiconductors assumes no responsibility or liability for the use of any of these products, conveys no license or title under any patent, copyright, or mask work right to these products, and makes no representations or warranties that these products are free from patent, copyright, or mask work right infringement, unless otherwise specified.

Philips Semiconductors
811 East Arques Avenue
P.O. Box 3409
Sunnyvale, California 94088–3409
Telephone 800-234-7381

© Copyright Philips Electronics North America Corporation 1998
All rights reserved. Printed in U.S.A.

print code Date of release: 05-96

Document order number: 9397-750-04707

Let's make things better.

Philips Semiconductors

PHILIPS

НИОКР СИСТЕМС

ООО «НИОКРсистемс» - это оперативные поставки широкого спектра электронных компонентов отечественного и импортного производства напрямую от производителей и с крупнейших мировых складов. Реализуемая нашей компанией продукция насчитывает более полумиллиона наименований.

Благодаря этому наша компания предлагает к поставке практически не ограниченный ассортимент компонентов как оптовыми, мелкооптовыми партиями, так и в розницу.

Благодаря развитой сети поставщиков, помогаем в поиске и приобретении экзотичных или снятых с производства компонентов.

Наша компания это:

- Гарантия качества поставляемой продукции
- Широкий ассортимент
- Минимальные сроки поставок
- Техническая поддержка
- Подбор комплектации
- Индивидуальный подход
- Гибкое ценообразование
- Работаем по 275 ФЗ

ООО «НИОКР СИТЕМС»
Москва, 125362, Россия, ул. Вишневая, д. 9, к. 1, Блок 104 а и 104 в

Телефон: 8 (495) 268-14-82
Email: n@nsistems.ru

ИНН: 7735154786
ОГРН: 1167746717709