Pro Audio & Broadcast Catalog
Sixth Edition

Switchcraft®

Switchcraft®
www.switchcraft.com

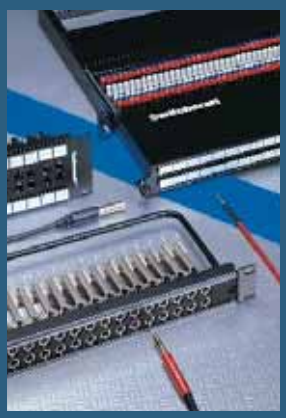
Patchbays, Patchcords & Molded Cable Assemblies

Connectors and Adapters

Jacks and Plugs

Guitar Switches

* Please visit the product pages on our website for the most up-to-date product information

About Switchcraft, Inc.

Switchcraft, Inc. was established in 1946 to manufacture jacks, plugs, and switches. We have since become the industry leader in producing a wide variety of connectors, adapters, jacks and plugs, patchbays, jackfields, and switches. While our products cover a diverse number of markets, this catalog focuses on our line of audio and video products, typically found in broadcast, recording, sound reinforcement, and other pro audio applications.

Some of the new products you'll find in this catalog include our EZ Norm Series of audio patchbays, where normal configurations can be changed from the front of the patchbay, using a standard screwdriver. Also found in this edition are new combination audio/video patchbays in both standard/long-frame and midsize/bantam styles. In the connector section, we're offering a new line of connectors called our EH Series, incorporating a wide range of connectors (Firewire, USB, Category 6, BNC, RCA, and more) in a standard XLR housing.

Please keep in mind that this is just a small sampling of our complete product lines. For more detailed information, we offer our "full line" catalog, our Engineering Design Guide.

Our Engineering Design Guide includes over 5,000 part numbers covering all five major product lines. If you don't see it here, chances are you'll find it in the EDG. And again, keep in mind that the EDG is also just a "snapshot" of our capabilities. We manufacture over 30,000 part numbers, so if it's not in the EDG, please contact us with your requirements. To keep up on all the new products we have to offer, visit our website at **www.switchcraft.com** and look for the New Product Showcase.

Patchbay Series	*4 – 43*
Patchcords/Molded Cables	*44 – 45*
Connector Series	*46 – 62*
Audio Adapter Series	*63 – 64*
Jack Series	*65 – 82*
Plug Series	*83 – 93*
Switch Series	*94 – 96*
Index	*98 – 100*

Detailed Table of Contents — Pages 2 – 3

* Please visit the product pages on our website for the most up-to-date product information

Table of Contents

Patchbays

Professional Punchdown Terminal (PPT) 4
Audio Patchbay Series 5–33
MTPH/TTPH Harness Series 5-7
Front Access Series 8–9
EZ Norm Patchbay Series.....10–11
RS 422 Data Patchbay Series 12–13
MTP48K Wired Series 14–15
TTPW96K Wired Series.....16–17
MTPBP/TTPBP Backpanel Series 18–19
TT96 EDAC Series 20–21
TTP96K Patchkit Series 22–23
MT48K/MT52K Patchkit Series 24–25
MT48/MT52 Patchbay Series 26–27
TTP96AS Patchbay Series.....28–29
HPC Patchbay Series 30–31
Q-G® Patchbay Series 32–33
Video/Audio Patchbay Series.....34–44
VPP Video Patchbay Series.....34–36
MVP Midsize Video Patchbay Series.....37–39
VAP Video/Audio Patchbay Series 40–41
MVEZN Audio/Midsize Patchbay Series.....42
MBPK Video/Audio Patchbay Series 43
Audio and Video Patchcords 44–45

Connectors

Q-G® Audio Connector Series 46-48
A, AA, AAA Cord Style Series 46
B, C, D, E Panel Style Series.....47
J, K, P, R, T Wallplate, Gooseneck,
Panel & Cord Style Series.....48
Tini-Q-G® Connector Series 49
Tini-Q-G® Cord & Panel Style Series 49
HPC Connector Series 50-51
HPC Panel Style Series 50
HPC Cord, & Adapter Style Series.....51
EH Series Receptacles 52
MIDI and 2500 Series 53
HP75BNC Series 54
Connector Dimension Drawings 55–62
HP75BNC Series, EH Series 55
Q-G Audio - A, AA, AAA Series 56
Q-G Audio - B, C, D, E Series 57
Q-G Audio - J, K, P, R Series.....58
Q-G Audio - T Series 59
MIDI, Q-G Audio - P Series.....60
HPC Panel Style Series 61–62

Audio Adapters

XLR to XLR, RCA, 1/4", TQ-G Adapter Series 63
1/4" to 1/4", RCA; RCA to RCA;
& Miscellaneous Adapter Series.....64

Switc

* Please visit the product pages on our website for the most up-to-date product information

Jacks & Plugs

Jack Series

Littel Phone, Hi-D, Right Angle PC Mount 1/4", 1/4" Extension Jack Series 65
Thick Panel/Guitar, Locking 1/4", Tini, Tini-Extension, Micro, 3.5mm 67
Phono, Phono Extension, TT or Bantam, MT 1/4" Jack Series 69
Power/Jacks Plugs Series – 700, S700, 800 Cord & Panel Style Series 71
Jack Series Dimension Drawings 72–82
Littel Phone, Hi-D, 1/4" Extension, 700 Panel Jack Series 72
Littel Phone, Hi-D, 1/4" Extension Jack Series.....73
Right Angle PC Mount 1/4" Jack Series 74
Thick Panel/Guitar, Locking 1/4", Tini, Tini Extension Jack Series 75
Micro, 3.5mm Jack Series 76
3.5mm Jack Series.....77–79
Phono and Phono Extension Jack Series 80
TT or Bantam Jack Series.....81
MT 1/4" Jack Series.....82

Plug Series

Littel 1/4", Right Angle 1/4", Silent, Super Heavy Duty Plug Series 83
Tini, Micro, 3.5mm Stereo, Right Angle 3.5mm Stereo, Phono, Right Angle Phono Plugs Series ..85
TT or Bantam, Mil-Style 1/4" Plugs Series 87
Plug Series Dimension Drawings 88–93
Littel Plug 1/4" Series 88
Littel Right Angle 1/4", Silent, Super Heavy Duty Plug Series 89
Tini, Micro Plug Series 90
35HD 3.5mm Stereo Plug Series 91
Phono and Phone Right Angle Plug Series 92
TT or Bantam, Mil-Style 1/4" Plug Series 93

Switches

Switch Series.....94–95
Switch Series Dimension Drawings 96

Limited Lifetime Warranty

Switchcraft warrants all of its products to be of sound design, good materials and workmanship at the time of manufacture.

Switchcraft will repair or replace at its discretion any product proven to be defective under normal use.

Switchcraft's liability under the terms of this warranty is limited to the repair or replacement of defective products which have not been damaged through accident, abuse, misuse or unauthorized repair. Switchcraft shall in no case be liable for special or consequential damages of any nature.

Switchcraft®
www.switchcraft.com
5555 North Elston Avenue / Chicago, IL 60630
Phone: 773-792-2700 / Fax: 773-792-2129

Our Patchbays Now Feature the New Professional Punchdown Terminal (PPT)

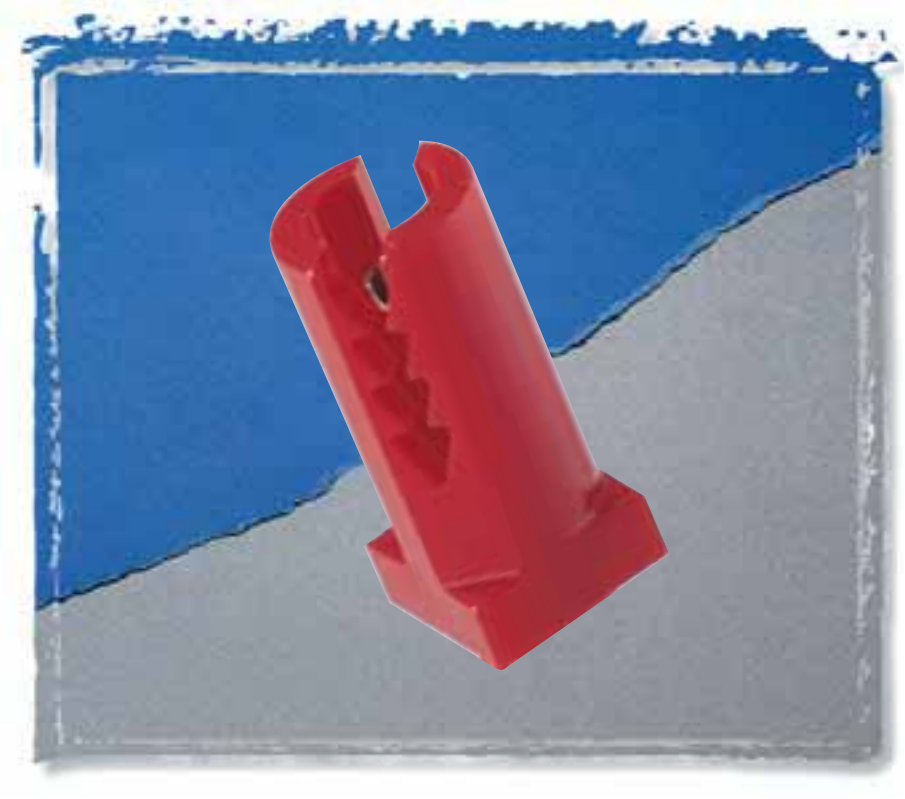

Our Patchbays Have Just Rounded A New Corner

Actually, the corners we rounded belong to our patchbays' revolutionary, new Professional Punchdown Terminal (PPT), making it perfectly compatible with the industry standard. We realized that achieving a new industry standard meant we couldn't cut any corners to get there.

The PPT design incorporates a split-barrel design and a more rugged, thicker housing to minimize the impact of repeated punchdowns. The split-barrel design eliminates the problems associated with the old "V-shaped" terminal designs. The PPT design distributes pressure evenly across both sides of the terminated wire, causing improved wire retention plus more reliable connections. The serrated teeth in the plastic housing firmly grip the wires, which also greatly improves wire retention. With the PPT, multiple wires can be terminated to a single contact, and a wide range of wire gauges can be used.

Look for Switchcraft's PPT in our MTP and TTP Series of audio patchbays, and in our new Backpanel Series. All Switchcraft audio patchbays incorporate heavy gauge materials and our high quality nickel-plated, steel framed jacks. Gold-plated, crossbar contacts come standard!

Materials

Housing: Thermoplastic (UL 94V-0)
Contacts: High strength copper alloy, tin plated
Wire size: Accommodates #22, 24, or 26 AWG, stranded or solid

Accessories

Part Number	Description
K459	PPT replacement kit consists of 15 of each color* (IDC/IDC)
K460	PPT replacement kit consists of 15 of each color (IDC/wirewrap)
PT1LA	PPT impact punchdown tool
PT2B	Replacement bit for PT1LA tool

**Colors consist of red, black, white, yellow, blue, and orange.*

DIGITAL AES / EBU Digital Ready!

MTPH/TTPH Harness Series

Features and Benefits

- Units feature either 48 MT style jacks or 96 TT style jacks on the front panels, to a 4 foot harness, out to a backpanel with PPT's
- All versions utilize AES/EBU wiring for complete digital compatibility
- Attractive, corrosion resistant nickel-plated, steel frame jacks
- Gold-plated switching contacts reduce contact resistance, improve reliability

Specifications

Materials

Jacks
- Frame: Nickel-plated steel
- Bushing: Nickel-plated brass
- Tip, Ring and Shunt Springs: Nickel silver with welded contacts
- Assembly Screws: Zinc-plated steel
- Welded Contacts: Gold alloy

Panel
- Front Channel: Black anodized aluminum
- Frame: C.R.S. black epoxy painted
- Designation Strips: Black polycarbonate 94V-0
- Designation Strip Covers: Clear polycarbonate
- Jack Inserts: Thermoplastic polyester

Mechanical

- Life: 30,000 cycles
- Insertion Force: 7 lbs. maximum
- Withdrawal Force: 1 lb. minimum
- Environmental: 0˚C to +50˚C

Electrical

- Contact Resistance: 30 milliohms maximum initial
- Insulation Resistance: 10,000 megohms maximum
- Dielectric Withstanding Voltage: 500 VAC at 60 Hz
- Working Voltage: 140 VDC maximum
- Current Rating: 100 milliamps

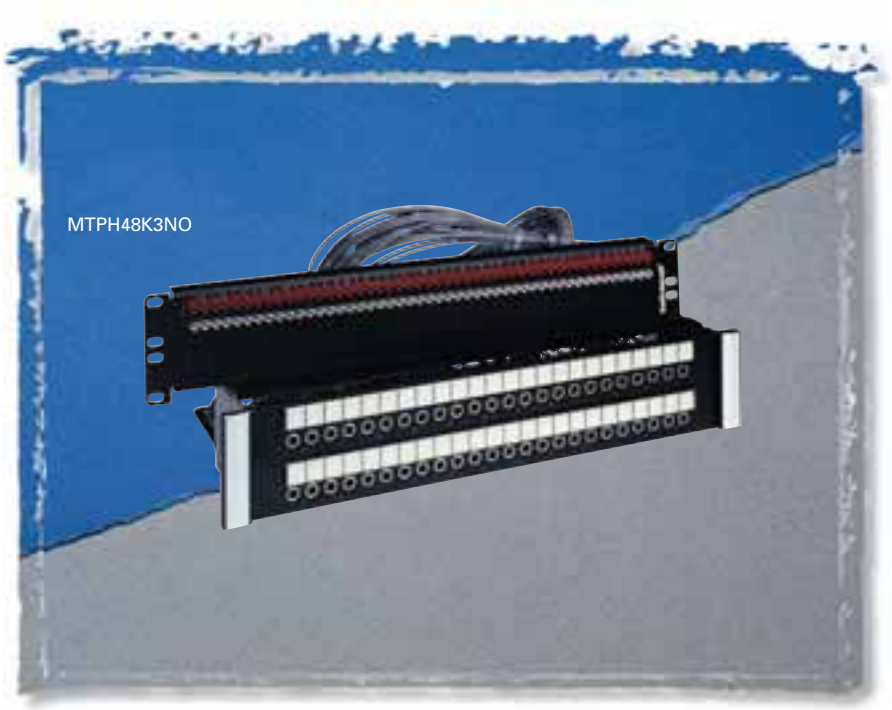

The MTPH and TTPH Harness Series utilize standard front panel assemblies, a 4-foot cable harness, and our standard back panel assemblies. Primarily used where the back panels must either be mounted into a rack, or brought back to the front for easier access. Custom cable lengths can also be supplied. Contact the factory for details.

Ordering Information

Part Number	Type of Jack	No. of Jacks	Description
MTPH48K1NS	MT	48	1.75" High front panel, 4' Harness, 3.5" High back panel, normals strapped
MTPH48K1NO	MT	48	1.75" High front panel, 4' Harness, 3.5" High back panel, normals brought out
MTPH48K3NS	MT	48	3.5" High front panel, 4' Harness, 3.5" High back panel, normals strapped
MTPH48K3NO	MT	48	3.5" High front panel, 4' Harness, 3.5" High back panel, normals brought out
MTPH48K3SNO	MT	48	3.5" High front panel, 4' Harness, 3.5" High back panel, sleeve normals brought out
TTPH96K1NS	TT	96	1.75" High front panel, 4' Harness, 3.5" High back panel, normals strapped
TTPH96K1NO	TT	96	1.75" High front panel, 4' Harness, 5.25" High back panel, normals brought out
TTPH96K3NS	TT	96	3.5" High front panel, 4' Harness, 3.5" High back panel, normals strapped
TTPH96K3NO	TT	96	3.5" High front panel, 4' Harness, 5.25" High back panel, normals brought out

See Next Page for Mechanical Drawings

5555 North Elston Avenue / Chicago, IL 60630
Phone: 773-792-2700 / Fax: 773-792-2129

6 MTPH/TTPH Harness Series

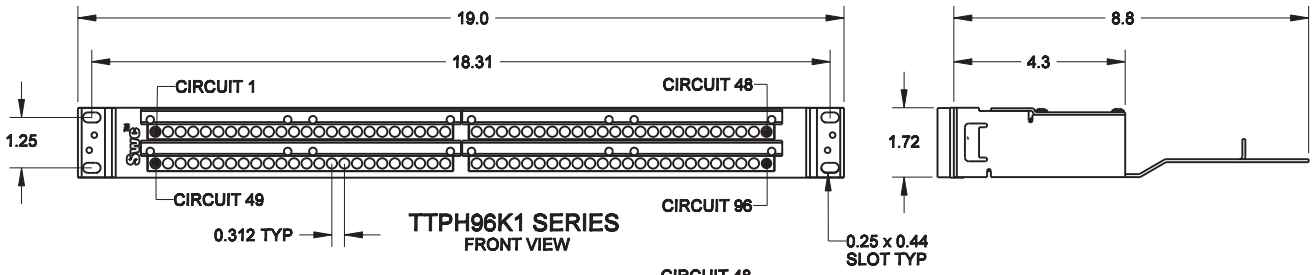

TTPH96K1 SERIES
FRONT VIEW

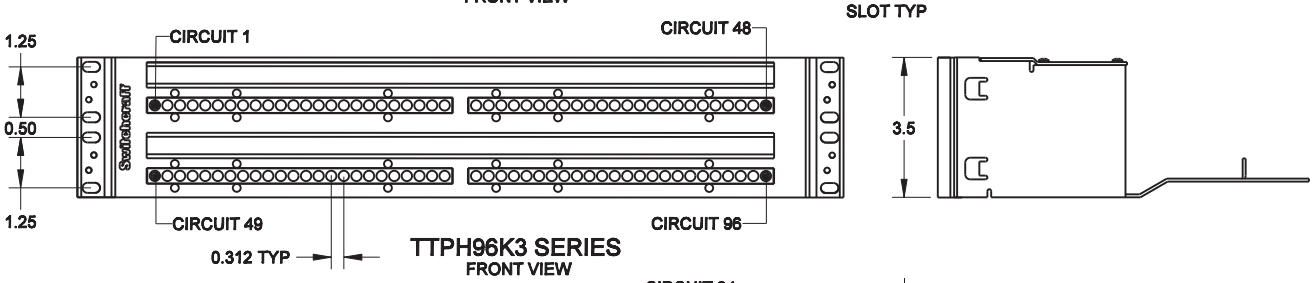

TTPH96K3 SERIES
FRONT VIEW

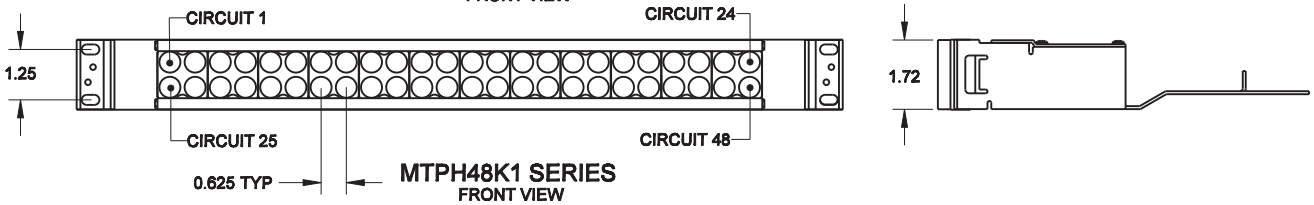

MTPH48K1 SERIES
FRONT VIEW

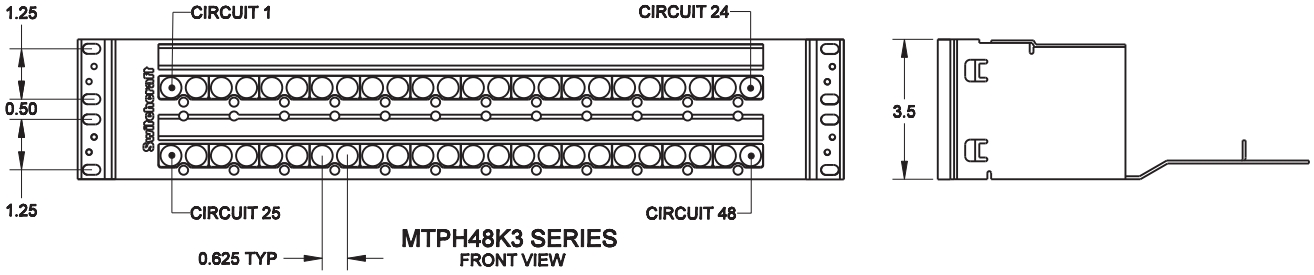

MTPH48K3 SERIES
FRONT VIEW

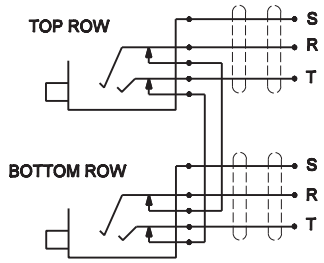

NORMALS AT JACKS

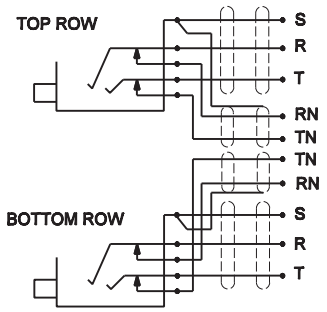

NORMALS OUT

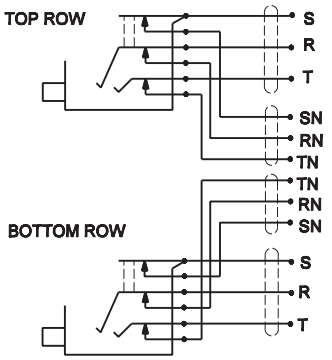

FULL SLEEVE NORMALS OUT

Switc

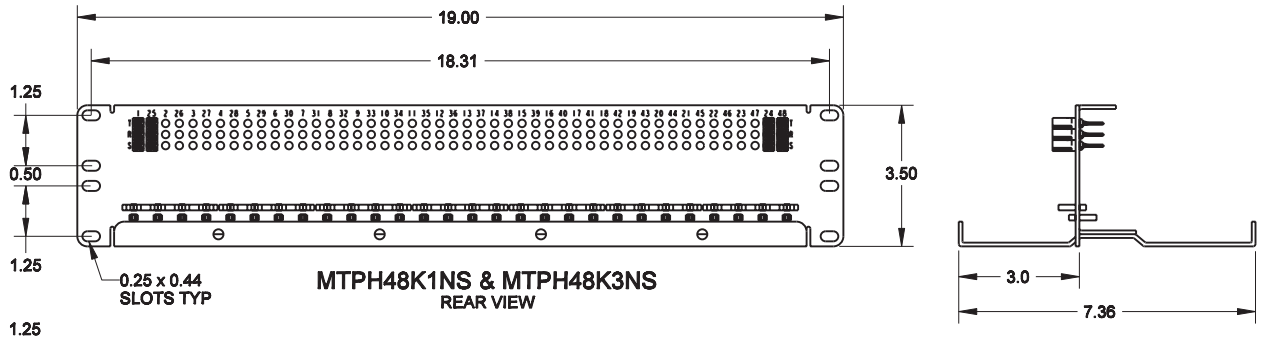

MTPH48K1NS & MTPH48K3NS
REAR VIEW

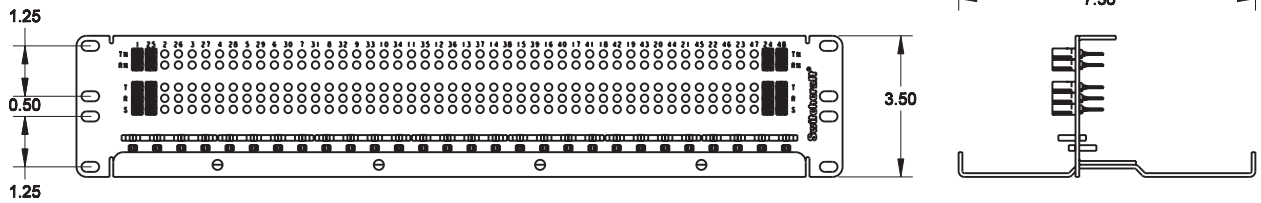

MTPH48K1NO & MTPHK3NO
REAR VIEW

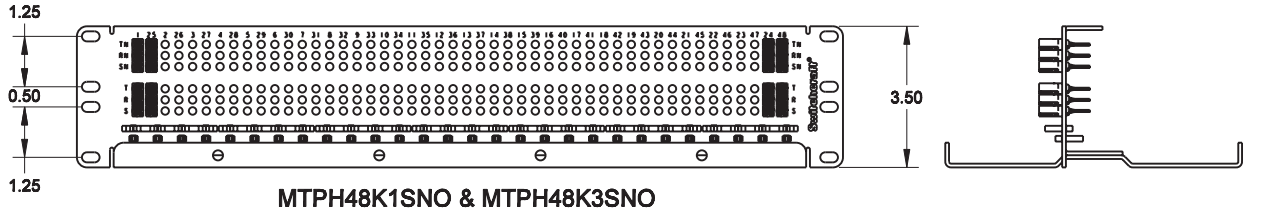

MTPH48K1SNO & MTPH48K3SNO
REAR VIEW

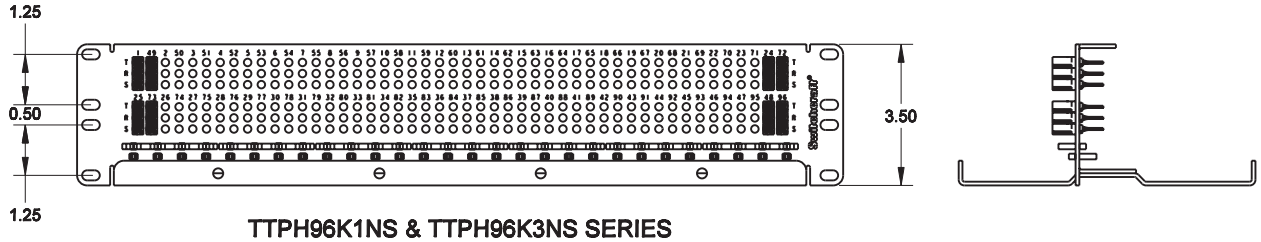

TTPH96K1NS & TTPH96K3NS SERIES
REAR VIEW

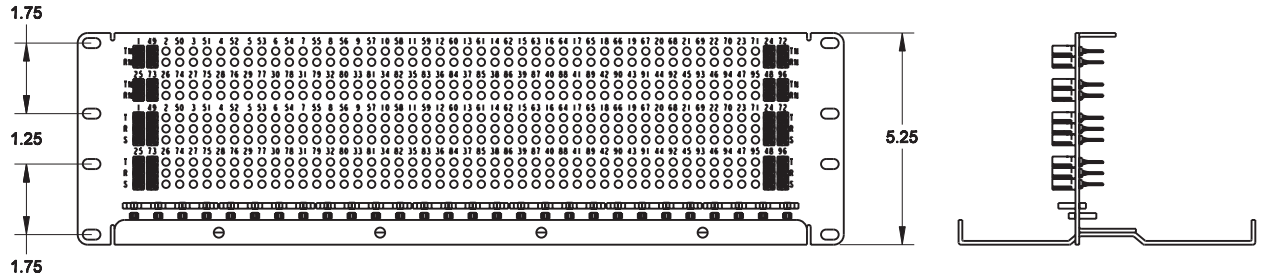

TTPH96K1NO & TTPH96K3NO SERIES
REAR VIEW

DIMENSIONS ARE FOR REFERENCE ONLY Inch (mm)

Switchcraft®
www.switchcraft.com
5555 North Elston Avenue / Chicago, IL 60630
Phone: 773-792-2700 / Fax: 773-792-2129

Front Access Series

Features and Benefits

- Easy slide-out tray slides forward for easy re-termination from the front of the rack
- Available with either 48 MT style or 96 TT style jacks in a 1RU space
- Attractive, corrosion resistant nickel-plated, steel frame jacks
- Gold-plated switching contacts reduce contact resistance, improves reliability
- Extra wide designation strips for easy channel identification
- Rugged, attractive black epoxy-finished steel chassis
- Configurations available include normals strapped and normals brought out

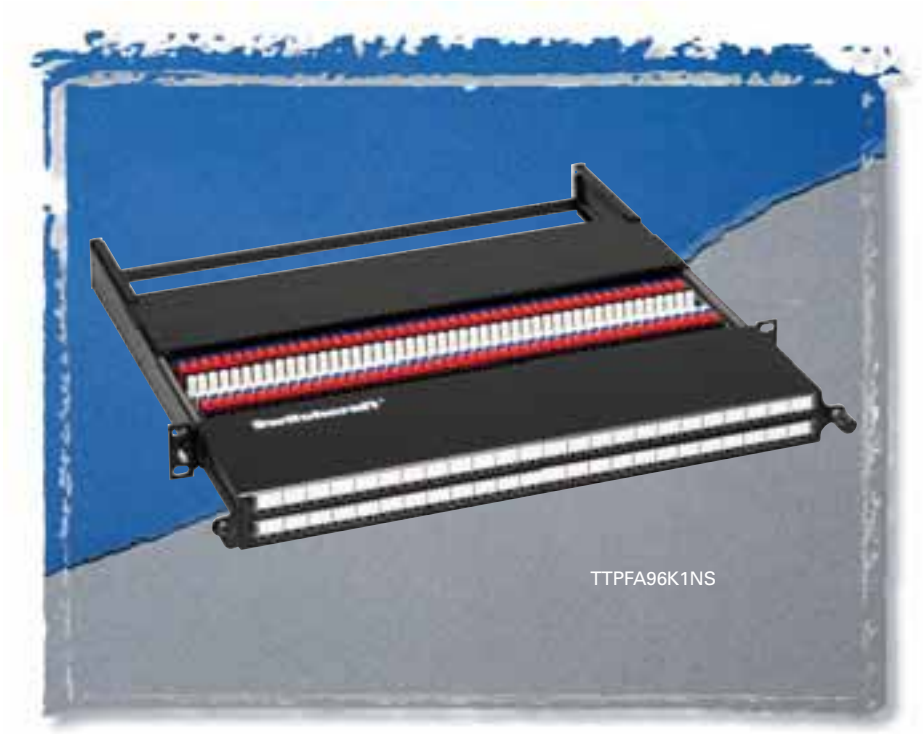

The Front Access Series offers the end user the ease of re-terminating patchpoints from the front of the rack as opposed to the back. A slide out tray allows the user to slide out the punchdown terminals and reconfigure the unit. An easy release mechanism on either side of the unit allows it to be pushed back into place and easy to grip locking nuts tighten the unit in place.

Specifications

Materials

Jacks
- Frame: Nickel-plated steel
- Bushing: Nickel-plated brass
- Tip, Ring and Shunt Springs: Nickel silver with welded contacts
- Assembly Screws: Nickel-plated steel
- Welded Contacts: Gold alloy

Panel
- Frame: C.R.S. black epoxy painted
- Designation Strips: Black polycarbonate 94V-0
- Designation Strip Covers: Clear polycarbonate
- Jack Inserts: Thermoplastic 94V-0

Mechanical

- Life: 30,000 cycles
- Insertion Force: 7 lbs. maximum
- Withdrawal Force: 1 lb. minimum
- Operating: -20˚C to +65˚C

Electrical

- Jack Contact Resistance: 30 milliohms initial maximum; 50 milliohms after life
- Jack Insulation Resistance: 10,000 megohms maximum
- Dielectric Withstanding Voltage: 500V at 60 Hz AC
- Working Voltage: 100 milliamps or less; maximum 56.5 VDC

Ordering Information

Part Number	Type of Jack	No. of Jacks	Description
TTPFA96K1NS	TT	96	1.75" High, normals strapped
TTPFA96K1NO	TT	96	1.75" High, normals brought out
MTPFA48K1NS	MT	48	1.75" High, normals strapped
MTPFA48K1NO	MT	48	1.75" High, normals brought out

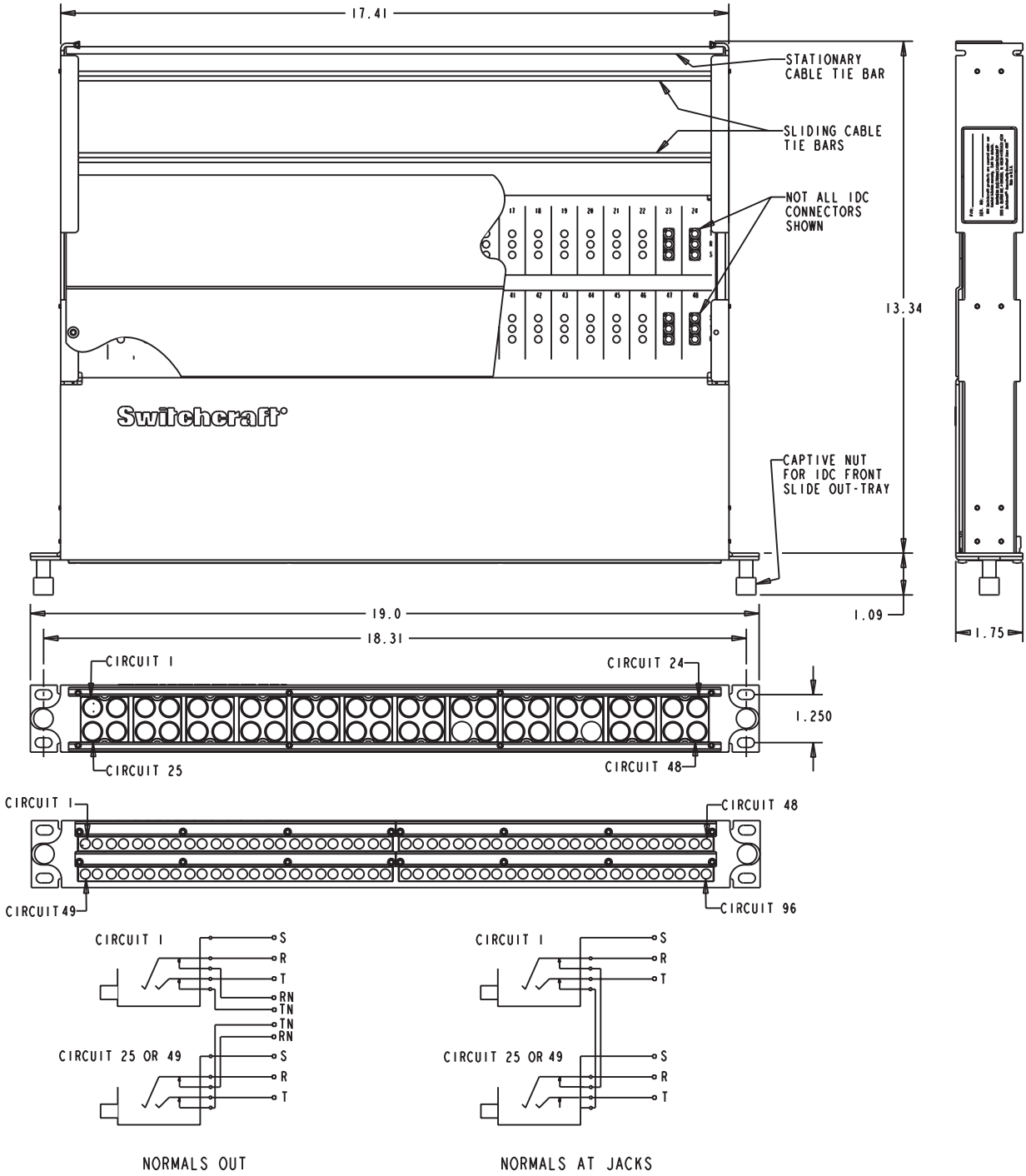

DIMENSIONS ARE FOR REFERENCE ONLY Inch (mm)

Switchcraft®
www.switchcraft.com
5555 North Elston Avenue / Chicago, IL 60630
Phone: 773-792-2700 / Fax: 773-792-2129

EZ Norm Patchbay Series

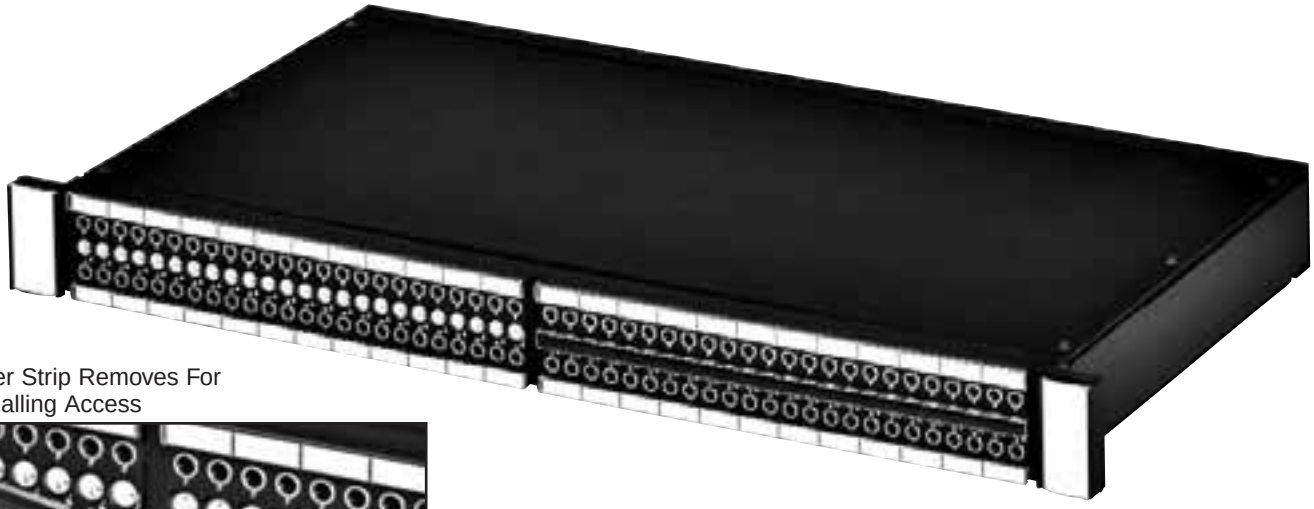

Center Strip Removes For Normalling Access

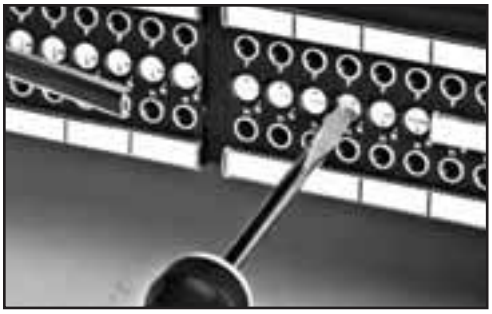

Easily Normal The Jacks By Rotating To “Full”, “Non,” Or “Half” Positions

The EZ Norm offers a simplified method for setting up and changing normals to a Bantam/TT patchbay. Simply remove the middle designation strip, and rotate the center cam, using a standard screwdriver. An audible “click” can be heard as you rotate from full normals to no normals to half normals. An opaque marking strip is included to conceal the normal position, if needed.

Specifications

Materials

Jacks
- Housing & Cover: 94V-0 rated thermoplastic
- Sleeve Collar: Nickel plated copper alloy
- Tip, Ring, Shunt, & Sleeve Springs: Nickel Silver with welded contacts
- Welded Contacts: Gold
- Cam Switching Springs: Silver plated copper alloy
- Cam Switching Contacts: Silver plated copper alloy

Mechanical

- Jack Mechanical Life: 30,000 cycles
- Cam Contact Mechanical Life: 30,000 cycles
- Insertion - Withdrawal Forces: 1 - 4 lbs.
- Moisture resistance: MIL-STD 202 Method 106
- Thermal shock: MIL-STD 202 Method 107
- Salt spray: MIL-STD Method 101 (48 hrs.)
- Vibration: MIL-STD 202 Method 213

Electrical

- Jack Spring Contact Resistance: 30 milliohm Maximum
- Cam Switch Contact Resistance: 30 milliohm Maximum
- Insulation Resistance: 10,000 Megaohms
- Dielectric Withstanding Voltage: 500 VAC (rms) at 60 Hz
- Insertion Loss: -0.5dB up to 10 MHz

EZ Norm Patchbay Options

- 1RU can be terminated to EDAC or Cannon DL, solder terminals, or wire-wrap terminals
- 1.5RU can be terminated to EDAC/Cannon DL, solder terminals, wire-wrap terminals, plus 3 pin connectors, or our own PPT Professional Punchdown Terminal
- 2RU Same as above
- All units will be offered with or w/o docking connector
- Unwired units will be offered with either cable tie bar or cable tray

Racks

The EZ Norm comes in 3 different rack heights, 1RU, 1.5RU, and 2 RU.

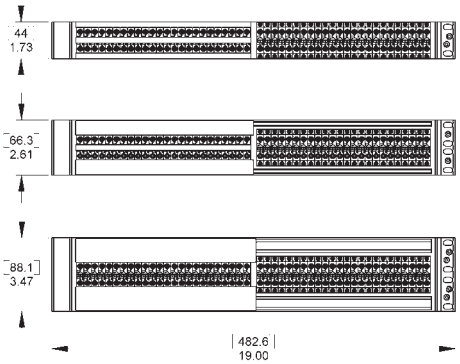

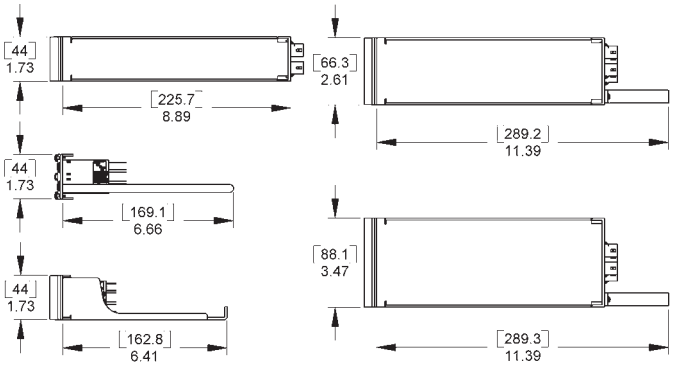

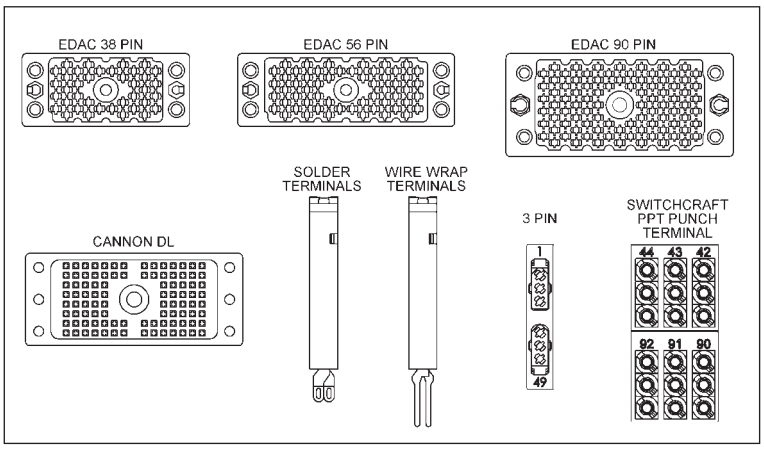

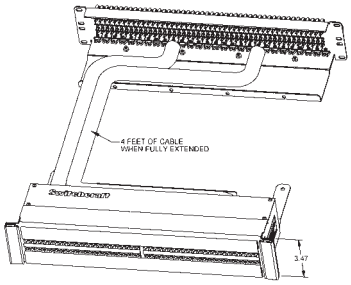

Harness Assembly

The EZ Norm is also offered as a harness assembly, with a standard harness of 4 ft. Custom lengths are available, call Switchcraft® for details.

TT	EZN	_	10	_	_	E90	IDC	SL	_
		H	15	P	D	E56	3PIN	CDL	T
			20			E38	WW	FA	B
TT SIZE JACKS	EZ-NORM CAM JACKS	REGULAR UNIT HARNESS UNIT (UMBILICAL)	1 RACK UNIT HEIGHT 1.5 RACK UNIT HEIGHT 2 RACK UNIT HEIGHT	UNWIRED PRE WIRED	NO DOCKING DOCKING CONNECTOR	EDAC/ELCO 90 PIN CONNECTOR EDAC/ELCO 56 PIN CONNECTOR EDAC/ELCO 38 PIN CONNECTOR IDC PPT TERMINALS 3 PIN CONNECTORS WIRE WRAP PINS SOLDER LUGS CANNON DL 96 PIN CONNECTORS FRONT ACCESS WITH PPT			UNWIRED ONLY NO REAR SUPPORT CABLE TRAY CABLE BAR

Front Access

The Front Access option offers a slide-out tray, allowing the end user to re-terminate the patch-bay from the front of the rack.

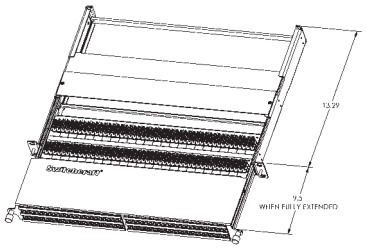

DIMENSIONS ARE FOR REFERENCE ONLY Inch (mm)

Switchcraft®
www.switchcraft.com
5555 North Elston Avenue / Chicago, IL 60630
Phone: 773-792-2700 / Fax: 773-792-2129

RS 422 Data Patchbay Series

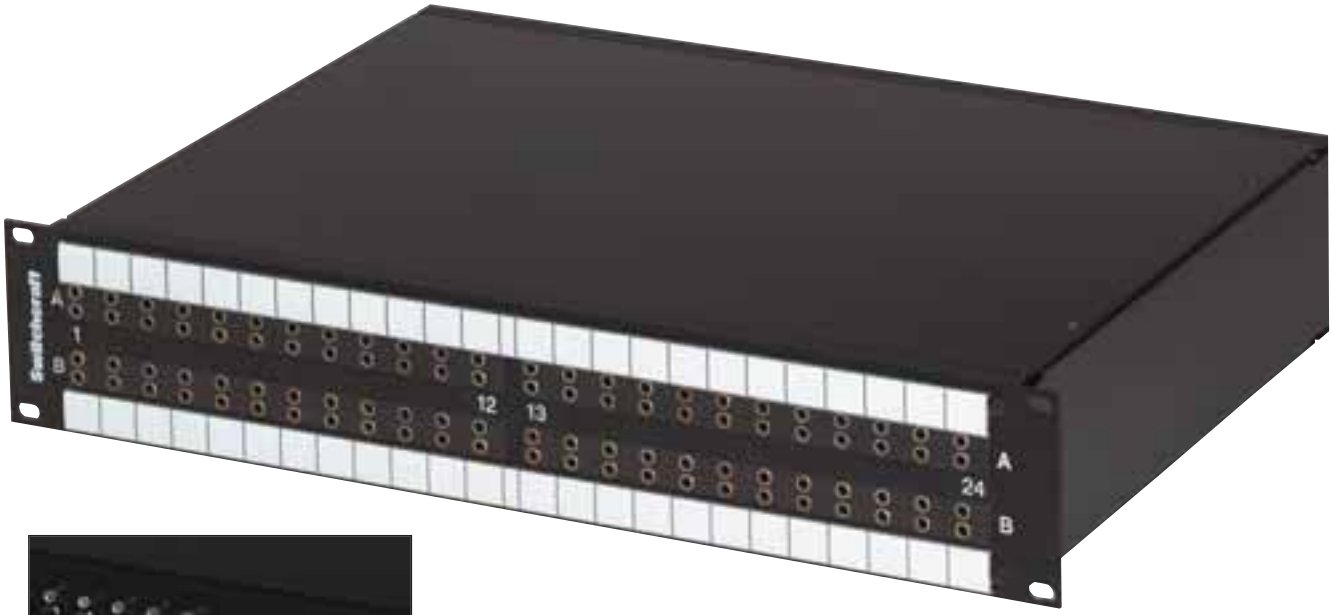

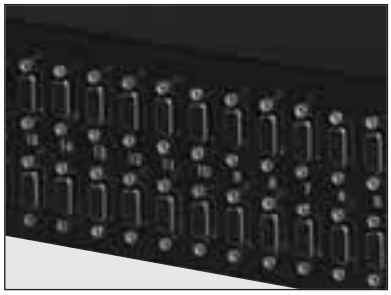

Our standard RS data jackfield series offer a multiple combination of ports, rack heights, and back panel terminations which will easily fit into any television broadcast or video production where custom data patching is required. Custom ports and rack height combinations can be supplied. Contact the factory for details.

Ordering Information

Part Number*	No. of Jacks	Front Panel Layout	Back Plane	Rack Height
RS422H4N081	2 x 8	Horizontal	9 Pin D-Sub	1
RS422V4N081	2 x 8	Vertical	9 Pin D-Sub	1
RS422H4N161	2 x 16	Horizontal	9 Pin D-Sub	1
RS422H4N162	2 x 16	Horizontal	9 Pin D-Sub	2
RS422V4N161	2 x 16	Vertical	9 Pin D-Sub	1
RS422V4N162	2 x 16	Vertical	9 Pin D-Sub	2
RS422H4N242	2 x 24	Horizontal	9 Pin D-Sub	2
RS422V4N242	2 x 24	Vertical	9 Pin D-Sub	2
RS422V4N322	2 x 32	Vertical	9 Pin D-Sub	2

*Add "N" for non-normalled version

Features and Benefits

- Unit Features either 8,16, 24, or 32 TT style jacks on the front Panels, to a 9 pin D-Sub.
- All versions utilize low capacitance internal wiring for maximum performance of transferring data
- All standard units are available 1 or 2 rack units high (1.5 RU available by request)
- Rugged, attractive black epoxy finished steel frame chassis

Specifications

Electrical

Internal Wiring:
24 AWG Solid TC, foils shield
Nom Capacitance: 11.5 pF/ft between conductors
21.3 pF/ft between one conductor and conductor connected to the shield
Nom. Impedence: 110 Ohms

RS 422 Data Patchbay Series

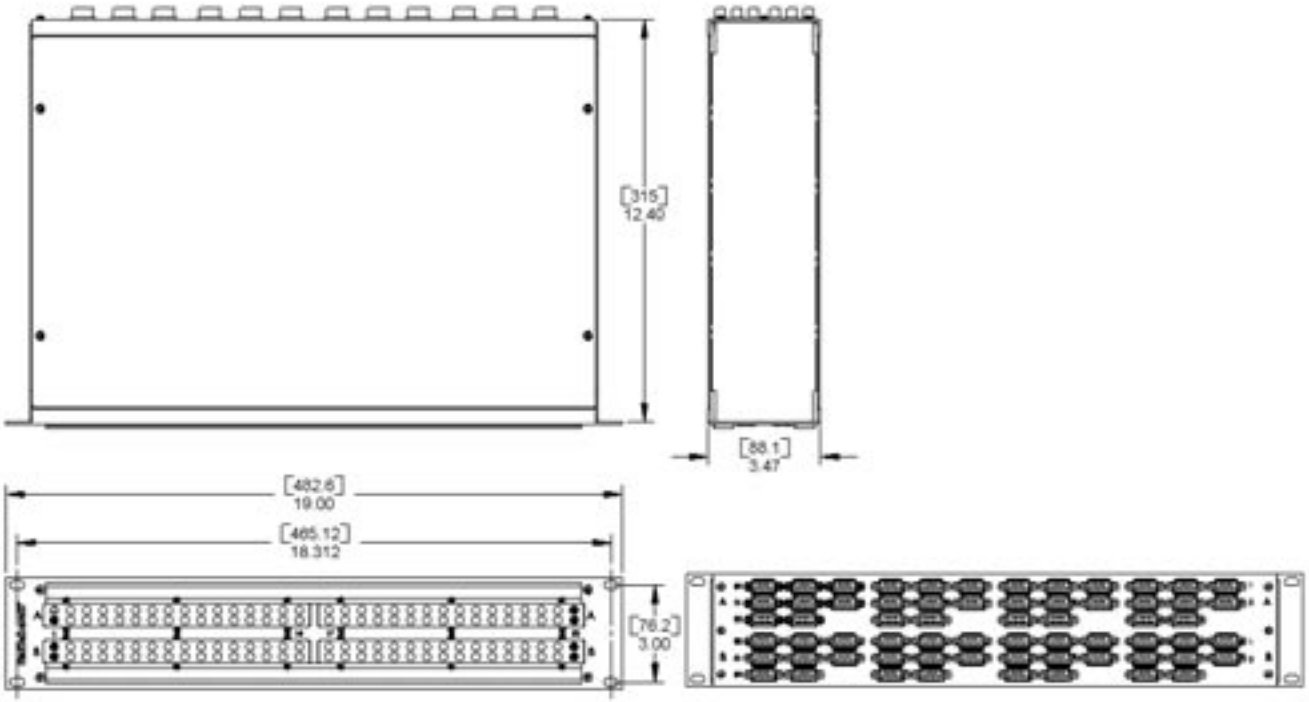

RS422V4N322
32 Vertical Paired Jacks
Front and Back Views

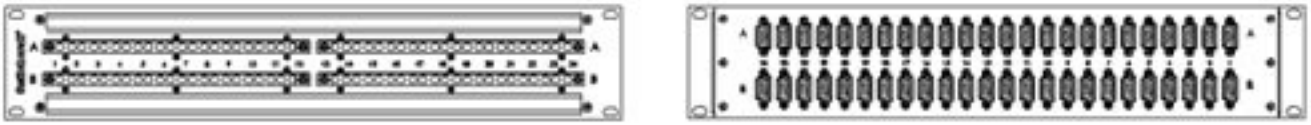

RS422H4N242
24 Horizontal Paired Jacks
Front and Back Views

DIMENSIONS ARE FOR REFERENCE ONLY Inch (mm)

Switchcraft®
www.switchcraft.com
5555 North Elston Avenue / Chicago, IL 60630
Phone: 773-792-2700 / Fax: 773-792-2129

AES / EBU Digital Ready!

MTP48K Wired Series

Features and Benefits

- Unit features 48 MT style jacks in either 1RU (1.75" H) or 2RU (3.5" H) spaces
- All versions utilize AES/EBU wiring for complete digital compatibility
- Attractive, corrosion resistant nickel-plated, steel frame jacks
- Gold-plated switching contacts reduce contact resistance, improve reliability
- Rugged, attractive black epoxy-finished steel chassis
- Extra wide designation strips for easy channel identification
- 1RU version configurations include normals strapped and normals brought out
- 2RU version configurations include normals strapped, normals brought out, and sleeve normals brought out

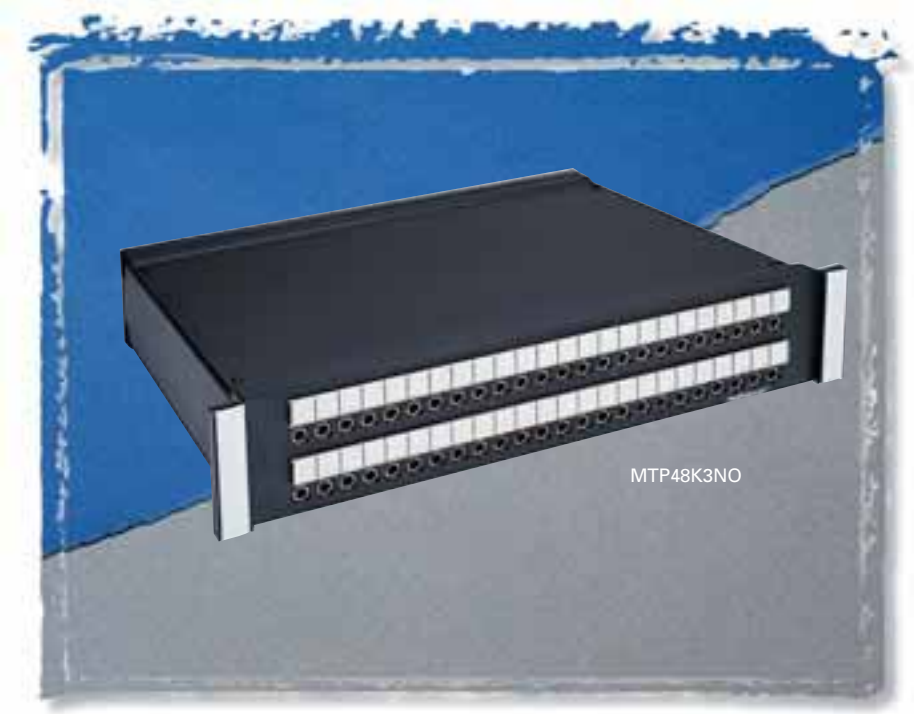

The MTP Series was developed with the AES/EBU digital standard in mind. All versions are made with 110 Ohm cabling inside as a standard. Available in a wide variety of configurations.

Specifications

Materials

Jacks
- Frame: Nickel-plated steel
- Bushing: Nickel-plated brass
- Tip, Ring and Shunt Springs: Nickel silver with welded contacts
- Assembly Screws: Zinc-plated steel
- Welded Contacts: Gold alloy

Panel
- Front Channel: Black anodized aluminum
- Frame: C.R.S. black epoxy painted
- Designation Strips: Black polycarbonate 94V-0
- Designation Strip Covers: Clear polycarbonate
- Jack Inserts: Thermoplastic polyester

Mechanical

- Life: 30,000 cycles
- Insertion Force: 7 lbs. maximum
- Withdrawal Force: 1 lb. minimum
- Environmental: O˚C to +50˚C

Electrical

- Contact Resistance: 30 milliohms maximum initial
- Insulation Resistance: 10,000 megohms maximum
- Dielectric Withstanding Voltage: 500 VAC at 60 Hz
- Working Voltage: 140 VDC maximum
- Current Rating: 100 milliamps

Ordering Information

Part Number	Type of Jack	No. of Jacks	Description
MTP48K1NS	MT	48	1.75" High, normals strapped
MTP48K3NS	MT	48	3.5" High, normals strapped
MTP48K1NO	MT	48	1.75" High, normals brought out
MTP48K3NO	MT	48	3.5" High, normals brought out
MTP48K3SNO	MT	48	3.5" High, sleeve normals out

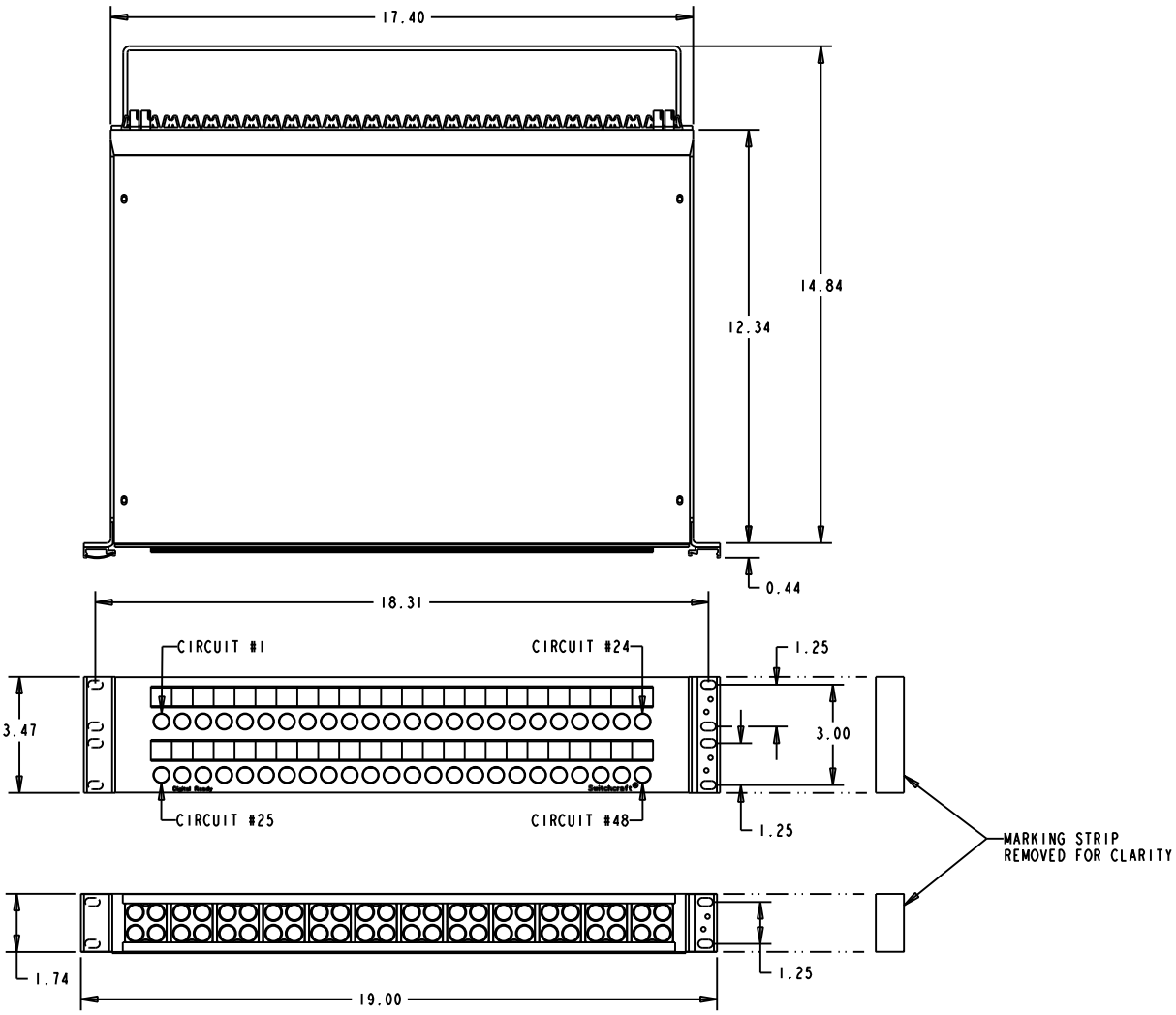

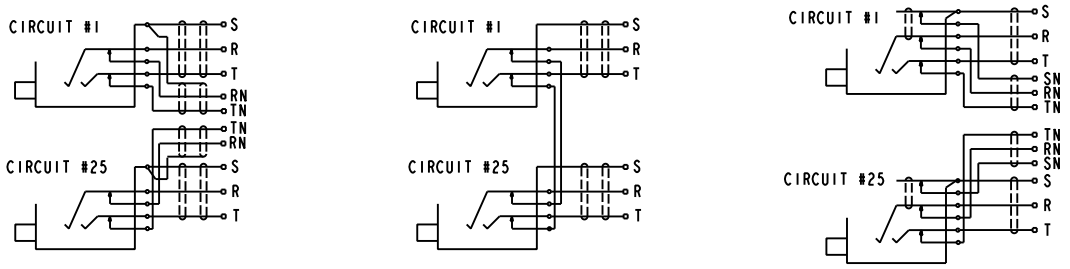

DIMENSIONS ARE FOR REFERENCE ONLY Inch (mm)

Switchcraft®
www.switchcraft.com
5555 North Elston Avenue / Chicago, IL 60630
Phone: 773-792-2700 / Fax: 773-792-2129

AES / EBU
Digital Ready!

TTPW96K Wired Series

Features and Benefits

- Unit features 96 TT style jacks in 2RU (3.5"H) space
- Utilizes AES/EBU wiring for complete digital compatibility
- Attractive, corrosion resistant nickel-plated, steel frame jacks
- Gold-plated switching contacts reduce contact resistance, improve reliability
- Rugged, attractive black epoxy-finished steel chassis
- Extra wide designation strips for easy channel identification

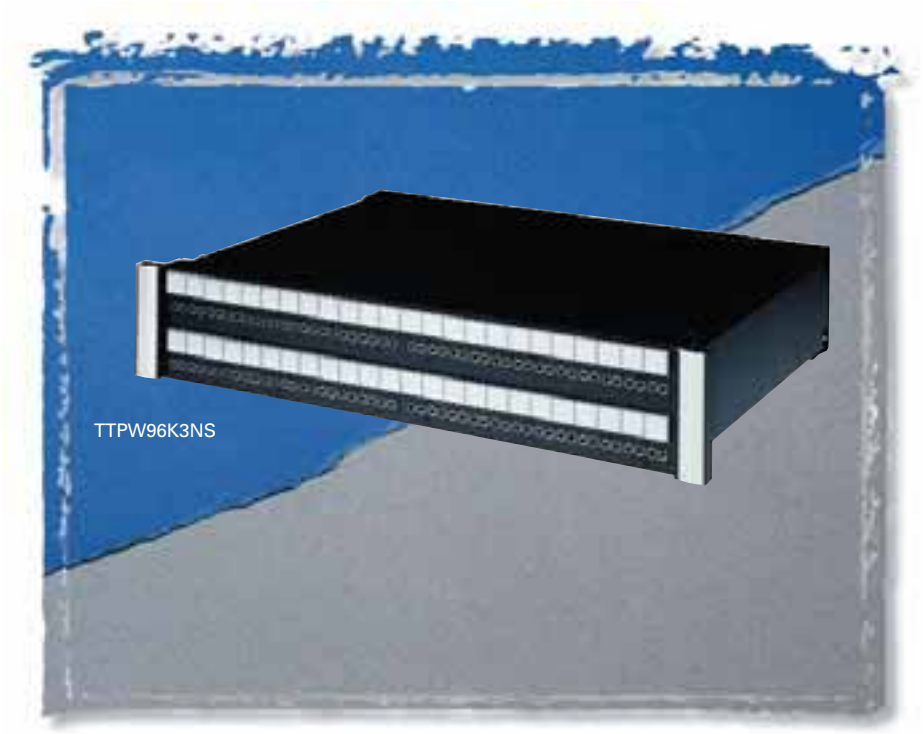

The TTPW96K Series was developed with the AES/EBU digital standard in mind. As a standard, the TTPW96K utilizes 110 Ohm cabling inside.

Specifications

Materials

Jacks
- Frame: Nickel-plated steel
- Bushing: Nickel-plated brass
- Tip, Ring and Shunt Springs: Nickel silver with welded contacts
- Assembly Screws: Zinc-plated steel
- Welded Contacts: Gold alloy

Panel
- Front Channel: Black anodized aluminum
- Frame: C.R.S. black epoxy painted
- Designation Strips: Black polycarbonate 94V-0
- Designation Strip Covers: Clear polycarbonate
- Jack Inserts: Thermoplastic polyester

Mechanical

- Life: 30,000 cycles
- Insertion Force: 7 lbs. maximum
- Withdrawal Force: 1 lb. minimum
- Environmental: 0˚C to +50˚C

Electrical

- Contact Resistance: 30 milliohms maximum initial
- Insulation Resistance: 10,000 megohms maximum
- Dielectric Withstanding Voltage: 500 VAC at 60 Hz
- Working Voltage: 140 VDC maximum
- Current Rating: 100 milliamps

Ordering Information

Part Number	Type of Jack	No. of Jacks	Description
TTPW96K1NN	TT	96	1.75" High, non-normals
TTPW96K1HN	TT	96	1.75" High, half normals
TTPW96K1NS	TT	96	1.75" High, normals strapped
TTPW96K3NN	TT	96	3.5" High, non-normals
TTPW96K3HN	TT	96	3.5" High, half normals
TTPW96K3NS	TT	96	3.5" High, normals strapped

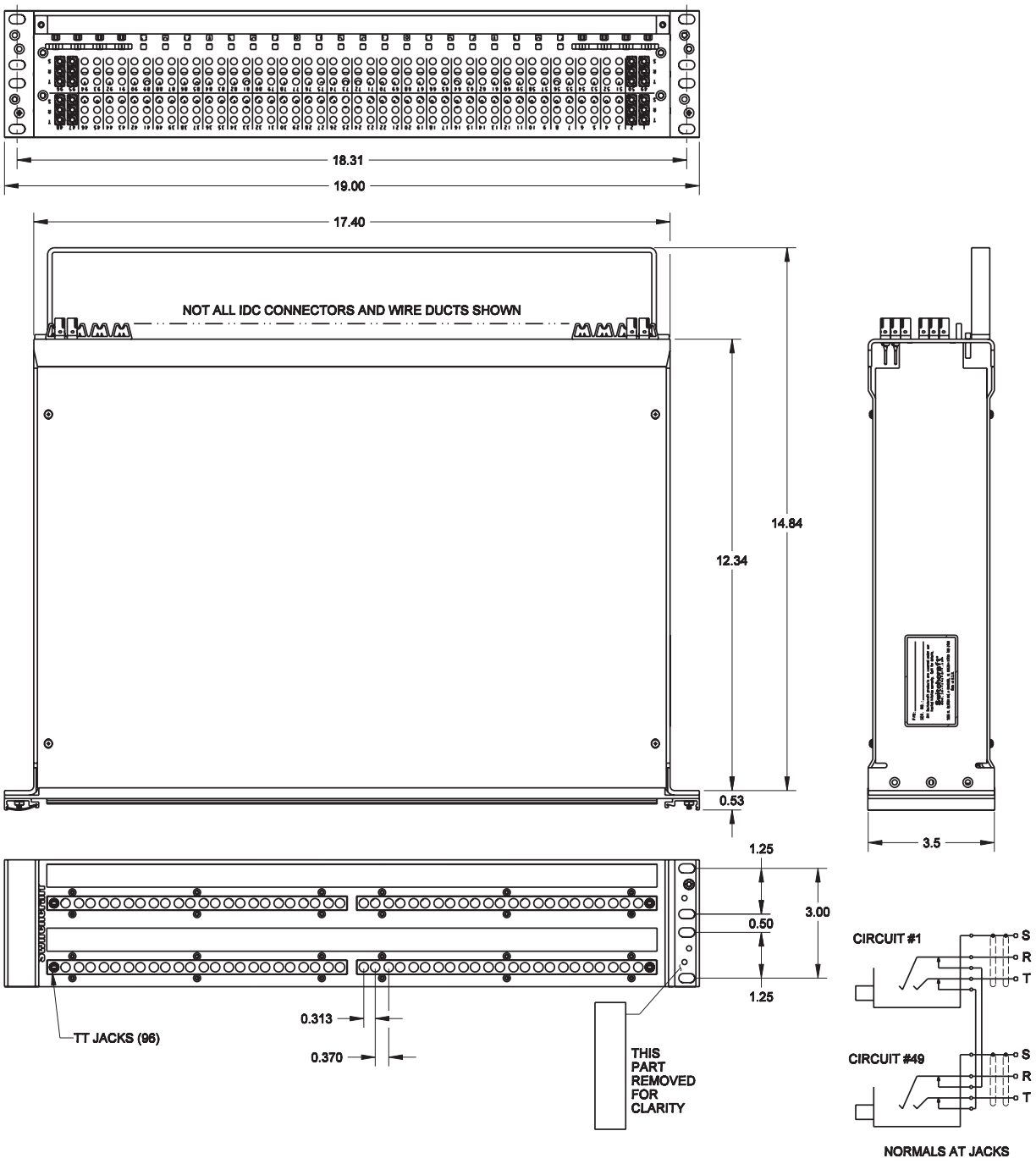

DIMENSIONS ARE FOR REFERENCE ONLY $\frac{\text{Inch}}{(\text{mm})}$

Switchcraft®
www.switchcraft.com
5555 North Elston Avenue / Chicago, IL 60630
Phone: 773-792-2700 / Fax: 773-792-2129

MTPBP/TTPBP Backpanel Series

Features and Benefits

- Allows for custom patchbay configurations or central patching points
- PPTs have IDCs on both sides for easy installation
- Rugged, attractive black epoxy-finished steel chassis
- Cable trays allow for mounting and securing terminated cable

Specifications

Panel thickness: .093"
Mounting hole diameter: .187"
Mounting hole spacing (48 IDCs/row): .340" (Horizontal) x .275" (Vertical)
Mounting hole spacing (52 IDCs/row): .320" (Horizontal) x .275" (Vertical)
Wire size: #22, 24, 26 AWG Stranded or Solid (IDC termination)

Materials

Housing: Thermoplastic (UL 94V-0)
Contacts: High strength copper alloy
Backpanels: Black Epoxy coated C.R.S.
Cable Tray: Black Epoxy coated C.R.S.

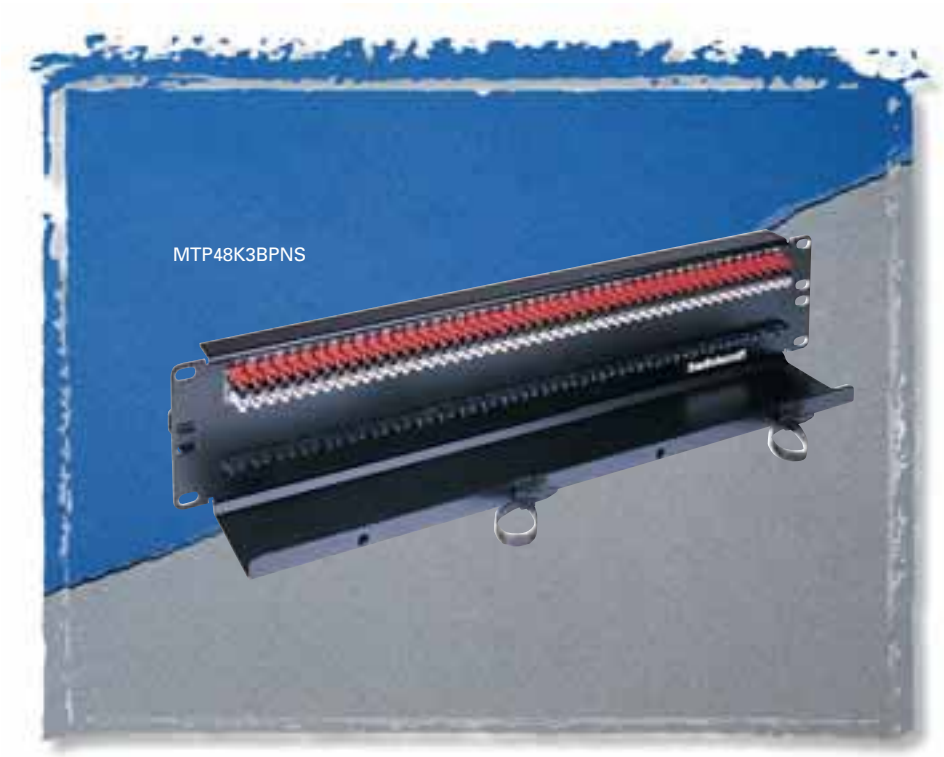

The Backpanel Series offers the end user the flexibility of configuring their own patchbay, or to use as a central patchpoint location. The backpanels utilize the PPT punchdown and come with a rugged cable tray.

Ordering Information

Part Number	Sets of PPT Terminals	Height	Description
MTP48K3BPNS	48	3.5"	T, R, S
MTP48K3PBNO	48	3.5"	T, R, S, TN, RN
MTP52K3BPNO	52	3.5"	T, R, S, TN, RN
MTP24K7	24 x 2	7.0"	+, -, S
TTP96K3BPNS	96	3.5"	T, R, S
TTP96K5BPNS	96 x 2	5.25"	T, R, S, TN, RN

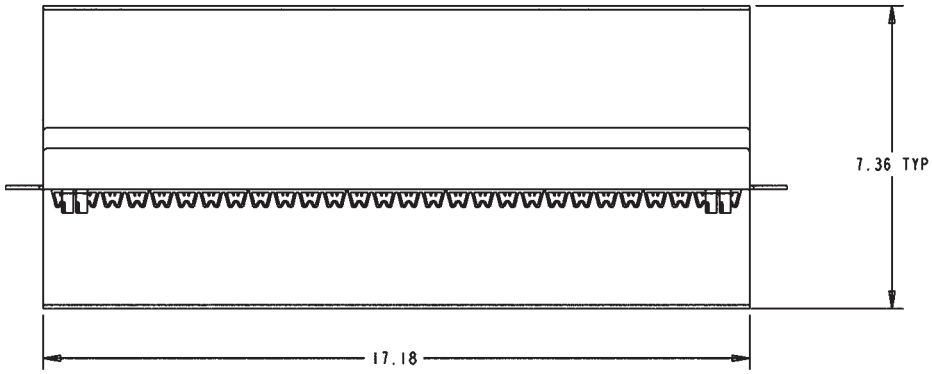

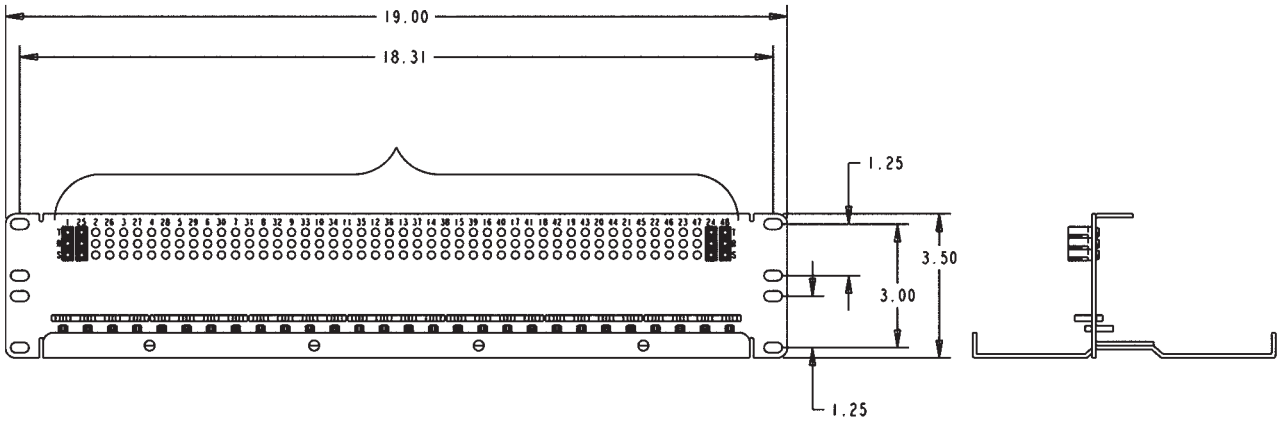

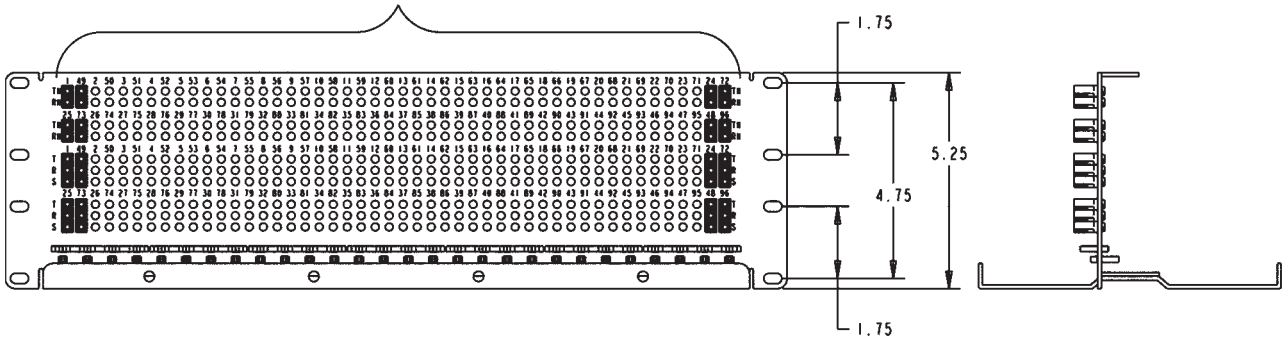

DIMENSIONS ARE FOR REFERENCE ONLY Inch (mm)

Switchcraft®
www.switchcraft.com
5555 North Elston Avenue / Chicago, IL 60630
Phone: 773-792-2700 / Fax: 773-792-2129

TT96 EDAC Series

Features and Benefits

- Attractive, corrosion-resistant, nickel-plated jacks
- Steel frame jacks for superior jack life
- Extra wide labeling strips provide maximum space and two vertical strips, one at each side
- Rugged, attractive black anodized aluminum face will not break
- Two configurations available:
  - Normals brought out
  - Normaled at jacks
- Gold switching contacts for long-term reliability
- Jacks paired for easy identification of left and right channels
- Connectorized by EDAC® connectors for ease of termination by customer

Specifications

Materials

Jacks
- Frame: Nickel-plated steel
- Bushing: Nickel-plated brass
- Tip, Ring and Shunt Springs: Nickel silver with welded contacts
- Assembly Screws: Zinc-plated steel
- Welded Contacts: Gold alloy

Panel
- Front Channel: Black anodized aluminum
- Frame & Cover: C.R.S. black epoxy painted
- Designation Strips: Black polycarbonate 94V-0
- Designation Strip Covers: Clear polycarbonate
- Jack Inserts: Polyester

EDAC Connector
- Housing: Thermoplastic, UL94V-0
- Contacts: Gold plated phosphor bronze

Mechanical

- Life: 30,000 cycles
- Insertion Force: 7 lbs. maximum
- Withdrawal Force: 1 lb. minimum
- Operating: -20˚C to +65˚C

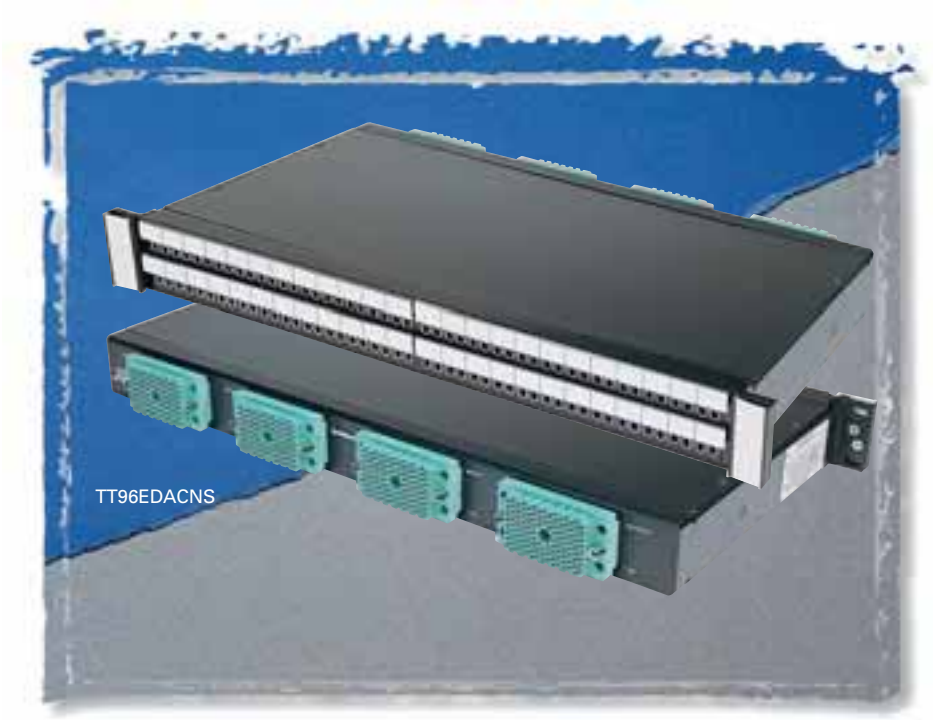

The TT96EDAC Series offers the convenience of EDAC® connectors on the back of the panel for easy installation. Available in normals strapped and normals brought out, both wired to the SAC code of wiring. We also offer custom wiring configurations. Contact the factory for details.

Electrical

- Contact Resistance: 30 milliohms maximum initial
- Insulation Resistance: 10,000 megohms
- Dielectric Withstanding Voltage: 500VAC at 60 Hz
- Working Voltage: 140VDC
- Current Rating: 100 milliamps

EDAC Mating Plugs

Part Number	Description
516-090-000-301	90 Pin male w/ screw
516-090-000-302	90 Pin male w/ nut
516-120-000-101	120 Pin male w/ screw
516-120-000-102	120 Pin male w/ nut
516-290-500	Terminal solder-style
516-290-590	Terminal crimp-style

Ordering Information

Part Number	Type of Jack	No. of Jacks	Description
TT96EDACNO	TT	96	Normals Brought Out (120 pin EDAC)
TT96EDACNS	TT	96	Normals Strapped (90 pin EDAC)

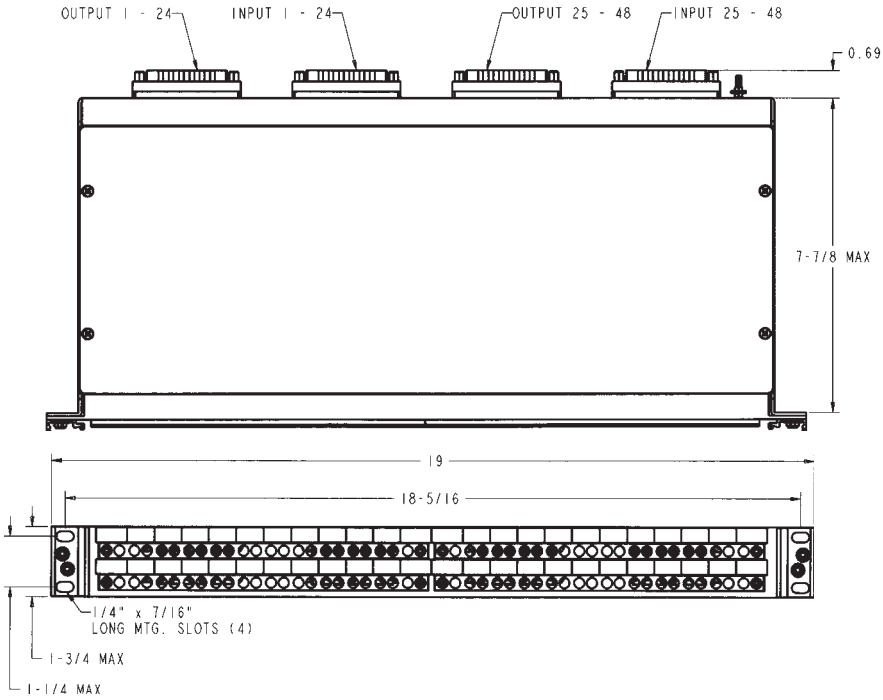

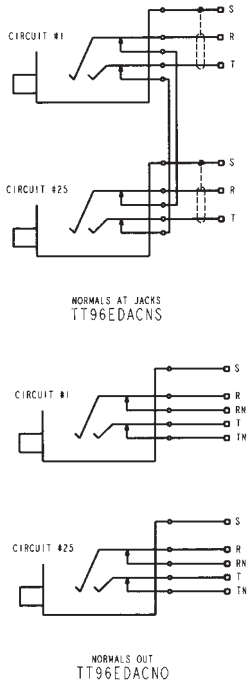

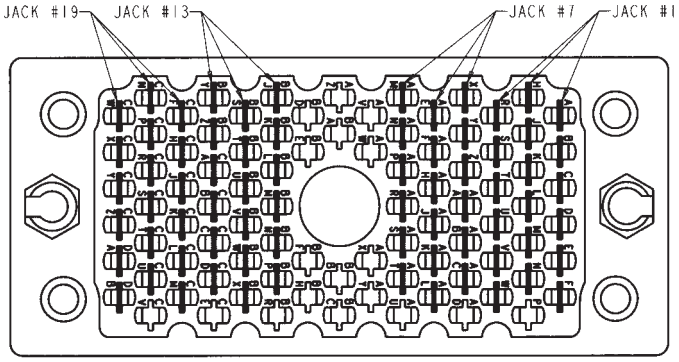

Standard Audio Configuration Wiring (S.A.C.)
90 Pin Plug Connector
(Normals at jacks)

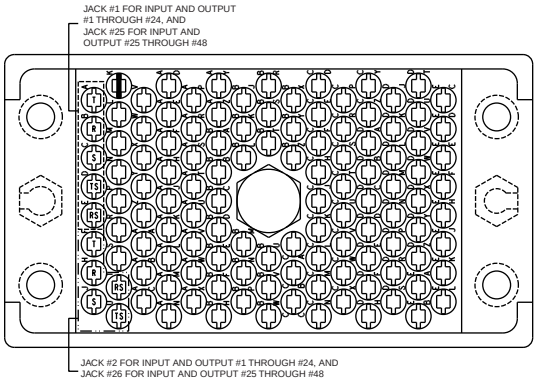

Standard Audio Configuration Wiring (S.A.C.)
120 Pin Plug Connector
(Normals brought out)

90 PIN CONNECTOR PIN-OUT			
JACK No.	TIP	RING	SLEEVE
1	A	H	R
JACKS #2 THRU #6 PATTERN CONTINUES TO F,N,W			
7	X	AE	AM
JACKS #8 THRU #12 PATTERN CONTINUES TO AC,AL,AT			
13	BJ	BS	BY
JACKS #14 THRU #18 PATTERN CONTINUES TO BP,BX,CD			
19	CF	CN	CW
JACKS #20 THRU #24 PATTERN CONTINUES TO CM,CU,DB			

120 PIN CONNECTOR PIN-OUT					
JACK No.	TIP	RING	SLEEVE	TIP SHUNT	RING SHUNT
1	A	B	C	D	E
JACKS #2 THRU #6 PATTERN CONTINUES TO AN, AM, AL, AK, AJ					
7	AH	AF	AE	AD	AP
JACKS #8 THRU #12 PATTERN CONTINUES TO BN, BP, BW, BV, BU					
13	BT	BS	BR	BX	BY
JACKS #14 THRU #18 PATTERN CONTINUES TO CX, DH, DF, DE, DD					
19	DC	DB	DA	CZ	CY
JACKS #20 THRU #24 PATTERN CONTINUES TO EF, EH, EJ, EK, EL					

DIMENSIONS ARE FOR REFERENCE ONLY Inch (mm)

Switchcraft®
www.switchcraft.com
5555 North Elston Avenue / Chicago, IL 60630
Phone: 773-792-2700 / Fax: 773-792-2129

TTP96K Patchkit Series

Features and Benefits

- Kit features 96 TT jacks in one rack space (1.75" high) or two rack spaces (3.5" high)
- Jack blocks can be removed from the front for easy soldering
- Dust tray limits dirt, dust and contamination of jack terminals
- Wire management straps are adjustable and reusable
- Attractive, corrosion resistant nickel-plated jacks
- Steel frame jack for superior jack life
- Extra wide labeling strips provide maximum space
- Rugged, attractive black anodized aluminum face will not break or rust
- Three jack configurations available for the exact switching arrangement you need: full normal, half normal, and non-normal (open circuit)
- Fanned solder terminals for easier solder connections
- Gold switching contacts for long-term reliability in normal-through connections

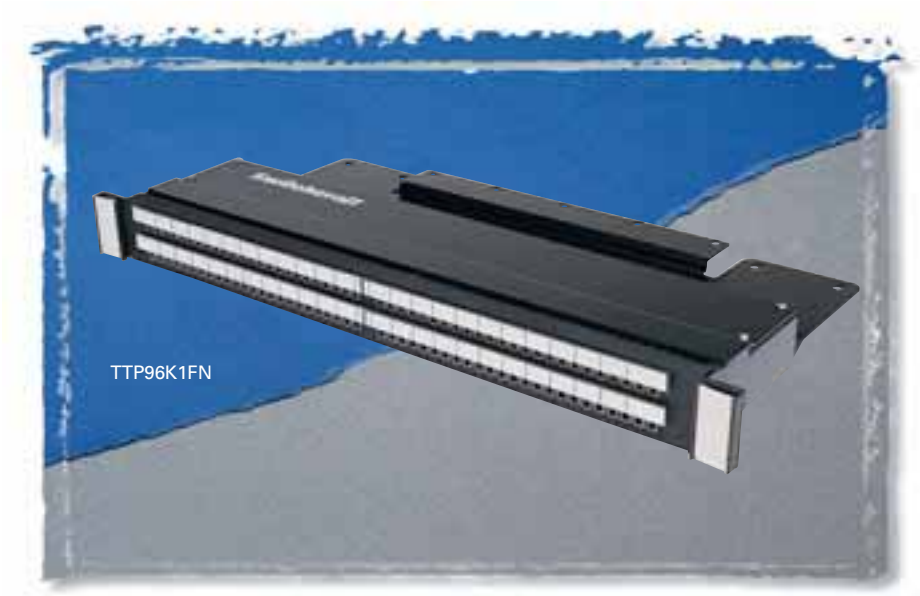

The TTP96K Patchkit Series offers the end user a rugged cable tray to support rear cabling. Heavy duty construction takes weight off the back of the jacks for increased reliability. Available in 1.75" or 3.5" height versions.

Specifications

Materials

Jacks
- Frame: Nickel-plated steel
- Bushing: Nickel-plated brass
- Tip, Ring and Shunt Springs: Nickel silver with welded contacts
- Assembly Screws: Nickel-plated steel
- Welded Contacts: Gold alloy

Panel
- Front Channel: Black anodized aluminum
- Frame: C.R.S. black epoxy painted
- Designation Strips: Black polycarbonate 94V-0
- Designation Strip Covers: Clear polycarbonate
- Jack Inserts: Thermoplastic polyester

Mechanical

Life: 30,000 cycles
Insertion Force: 7 lbs. maximum
Withdrawal Force: 1 lb. minimum
Environmental: 0˚C to +50˚C

Electrical

Contact Resistance: 30 milliohms maximum initial
Insulation Resistance: 10,000 megohms maximum
Dielectric Withstanding Voltage: 500VAC at 60 Hz
Working Voltage: 140VDC maximum
Current Rating: 100 milliamps

Ordering Information

Part Number	Type of Jack	No. of Jacks	Description
TTP96K1FN	TT	96	1.75" High, full normals
TTP96K1HN	TT	96	1.75" High, half normal
TTP96K1NN	TT	96	1.75" High, no normals
TTP96K3FN	TT	96	3.5" High, full normals
TTP96K3HN	TT	96	3.5" High, half normals
TTP96K3NN	TT	96	3.5" High, no normals

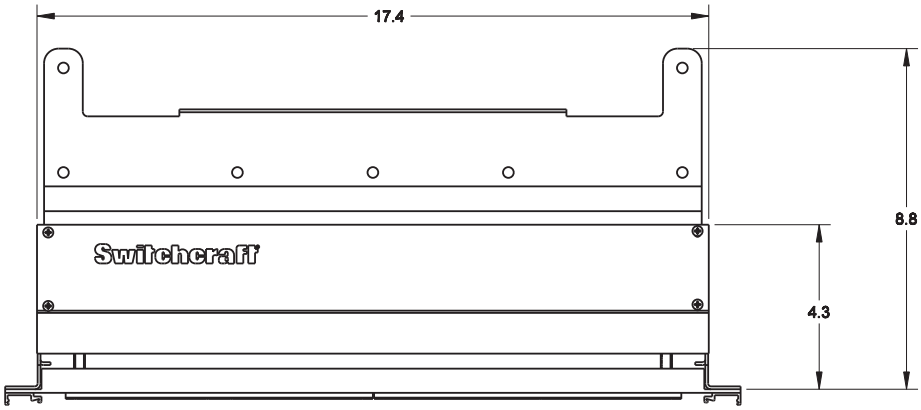

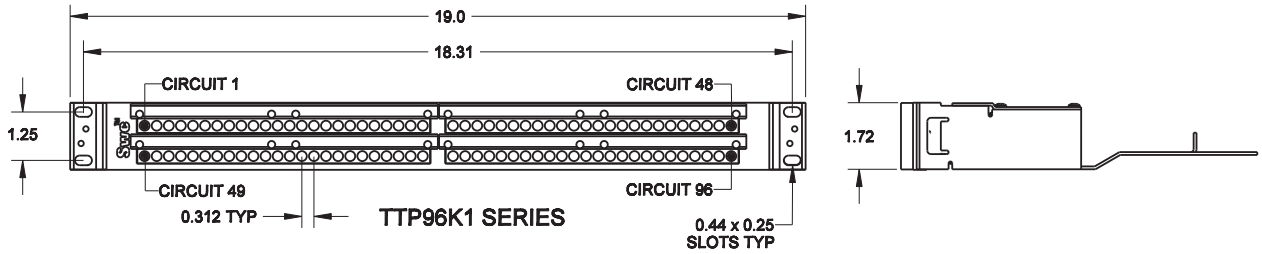

TTP96K1 SERIES

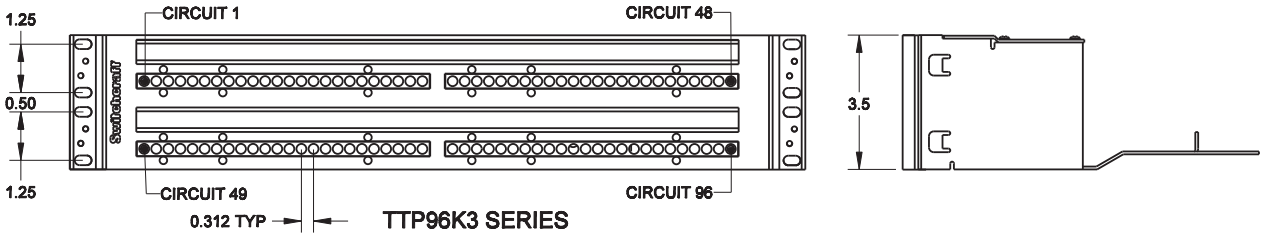

TTP96K3 SERIES

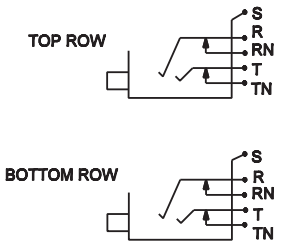

FULL NORMAL

TTP96K1FN
TTP96K3FN

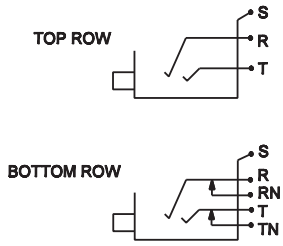

HALF NORMAL

TTP96K1HN
TTP96K3HN

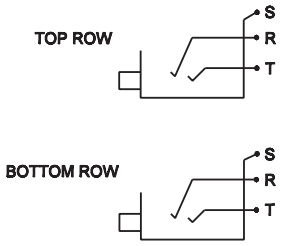

OPEN CIRCUIT

TTP96K1NN
TTP96K3NN

DIMENSIONS ARE FOR REFERENCE ONLY Inch (mm)

Switchcraft®
www.switchcraft.com
5555 North Elston Avenue / Chicago, IL 60630
Phone: 773-792-2700 / Fax: 773-792-2129

MT48K/MT52K Patchkit Series

Features and Benefits

- Kit features 48 1/4" longframe jacks in one rack space (1" high) or in two rack spaces (3" high) or 52 1/4" longframe jacks in one rack space (1" high)
- Allows user to add cable and termination panel
- Removable jack panel from the front allows easy soldering of wire connections
- Jacks have gold switching contacts
- Fanned solder terminals for easier soldering
- Offset ground lugs allow easy bussing of ground with one wire
- Jacks have a nickel-plated frame and assembly screws
- Wire management straps are reusable and adjustable

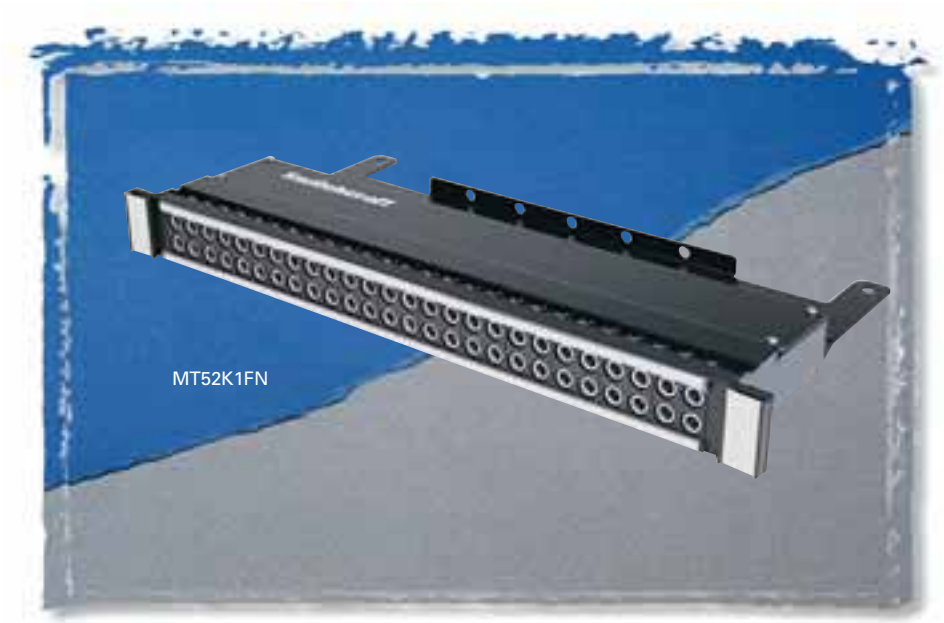

The MT48/52K Patchkit Series offers the end user a rugged cable tray to support rear cabling. Heavy duty construction takes weight off the back of the jacks for increased reliability. Available in 1.75" or 3.5" height versions.

Specifications

Materials

Jacks
- Frame: Stamped nickel-plated steel
- Bushing: Nickel-plated brass
- Tip, Ring and Shunt Springs: Nickel silver with welded contacts
- Assembly Screws: Nickel-plated steel
- Welded Contacts: Gold alloy

Panel
- Front Panel: Thermoplastic
- Frame: C.R.S. black epoxy paint
- Designation Strips: Black polycarbonate 94V-0
- Designation Strip Covers: Clear polycarbonate

Mechanical
- Life: 30,000 cycles
- Insertion Force: 7 lbs. maximum
- Withdrawal Force: 1 lb. minimum
- Operating: 0˚C to +50˚C

Electrical

- Contact Resistance: 30 milliohms maximum initial
- Insulation Resistance: 10,000 megohms maximum
- Dielectric Withstanding Voltage: 500VAC at 60 Hz
- Working Voltage: 140VDC maximum
- Current Rating: 100 milliamps

Ordering Information

Part Number	Type of Jack	No. of Jacks	Height	Description
MT48K1NS	MT	48	1.75"	Normals strapped
MT48K1FN	MT	48	1.75"	Full normals
MT48K1HN	MT	48	1.75"	Half normals
MT48K1NN	MT	48	1.75"	No normals
MT52K1NS	MT	52	1.75"	Normals strapped
MT52K1FN	MT	52	1.75"	Full normals
MT52K1HN	MT	52	1.75"	Half normals
MT52K1NN	MT	52	1.75"	No normals
MT48K3FN	MT	48	3.5"	Full normals
MT48K3HN	MT	48	3.5"	Half normals
MT48K3NN	MT	48	3.5"	No normals
MT52K3FN	MT	52	3.5"	Full normals
MT52K3HN	MT	52	3.5"	Half normals
MT52K3NN	MT	52	3.5"	No normals

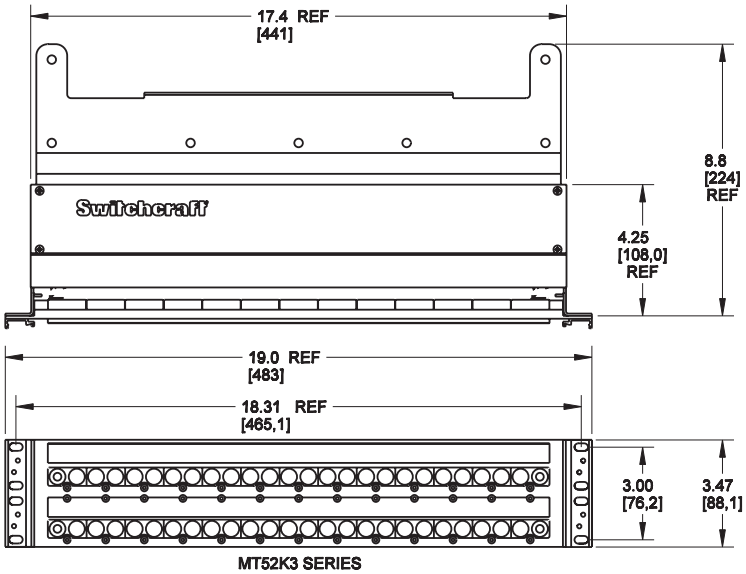

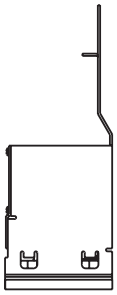

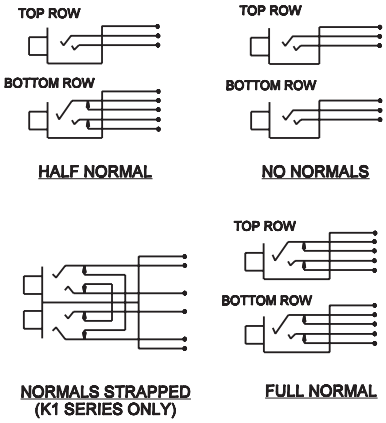

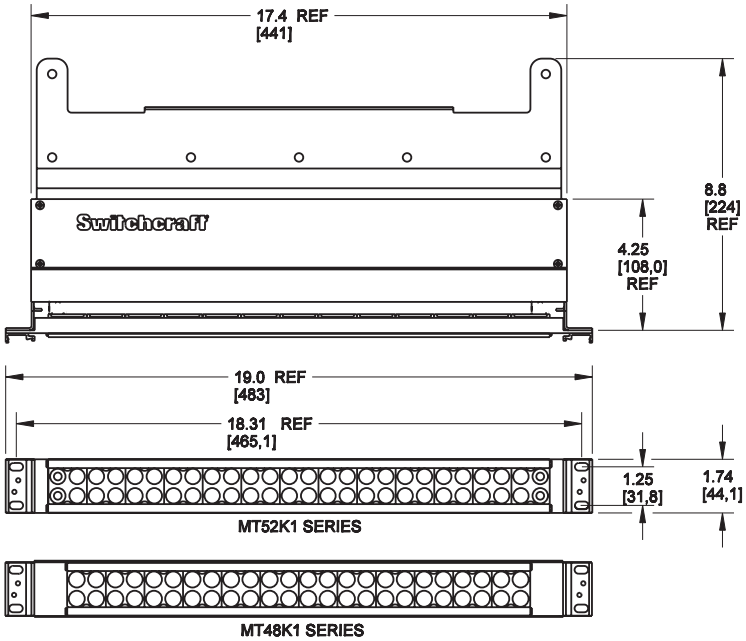

DIMENSIONS ARE FOR REFERENCE ONLY Inch (mm)

Switchcraft®
www.switchcraft.com
5555 North Elston Avenue / Chicago, IL 60630
Phone: 773-792-2700 / Fax: 773-792-2129

MT48/MT52 Patchbay Series

Features and Benefits

- Units feature either 48 or 52 MT Jax®
- Steel frame jacks for superior jack life
- Attractive, corrosion resistant nickel-plated jacks
- Gold switching contacts for long-term reliability in normal-through connections
- Offset ground terminal for ease in making common ground buss connections
- Fanned solder terminals for easier solder connections
- Cable tie bar takes the weight of cables off the jacks
- Four jack configurations available for the exact switching arrangement: full normal, half normal, non-normal, and normals strapped

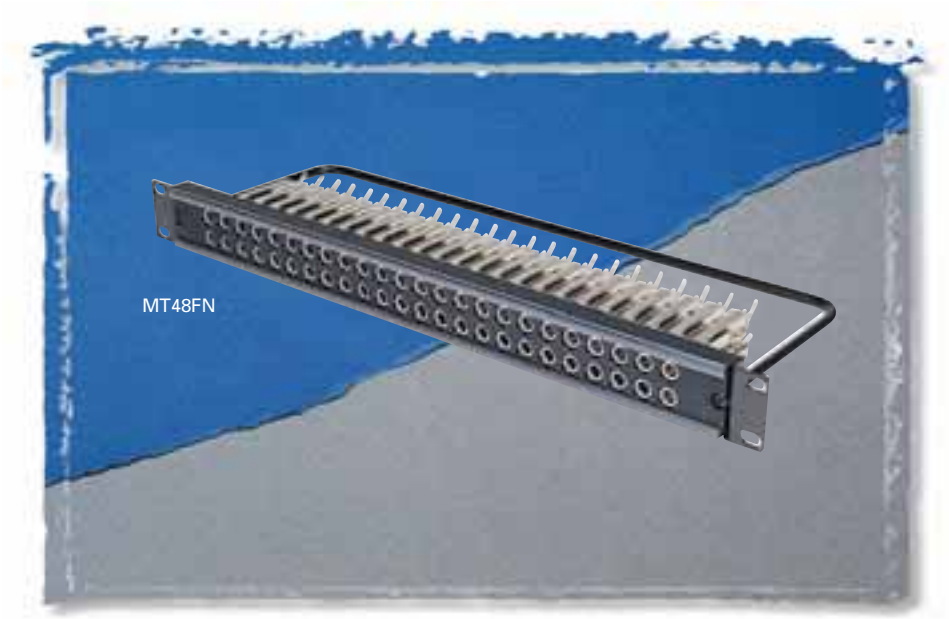

The MT48/52 Series patchbays offer a rugged cable tie bar to support rear cabling. Also available is the normals strapped configuration which has the shunts or normals tied together, top to bottom jacks.

Specifications

Materials

Jacks
- Frame: Steel, nickel-plated
- Bushing: Brass, nickel-plated
- Springs: Nickel silver, solder lugs
- Ground Terminal: Nickel silver, solder lugs
- Switching Contacts: Welded, gold alloy
- Insulation: Phenolic spacers, rigid PVC tubing through stack
- Screws: Steel, nickel-plated

Panel
- Jack Panel: Thermoplastic
- Cable Support Bracket: 5/16" diameter black epoxy painted steel rod
- Screws (designation strip): Steel, black zinc-plated
- Screws (mounting jack): Steel, nickel plated
- Kwik-change® Designation Strip: Extruded aluminum, black anodized
- Marking Strip: White plastic, matte finish
- Marking Strip Cover: Clear, extruded plastic

Mechanical

Life: 30,000 cycles
Insertion Force: 7 lbs. maximum
Withdrawal Force: 1 lb. minimum
Operating: 0˚C to +50˚C

Electrical

Contact Resistance: 30 milliohms maximum initial
Insulation Resistance: 10,000 megohms maximum
Dielectric Withstanding Voltage: 500VAC at 60 Hz
Working Voltage: 140VDC maximum
Current Rating: 100 milliamps

Ordering Information

Part Number	Type of Jack	No. of Jacks	Description
MT48FN	MT	48	Full normals
MT48HN	MT	48	Half normals
MT48NN	MT	48	No normals
MT48NS	MT	48	Normals strapped
MT52FN	MT	52	Full normals
MT52HN	MT	52	Half normals
MT52NN	MT	52	No normals
MT52NS	MT	52	Normals strapped

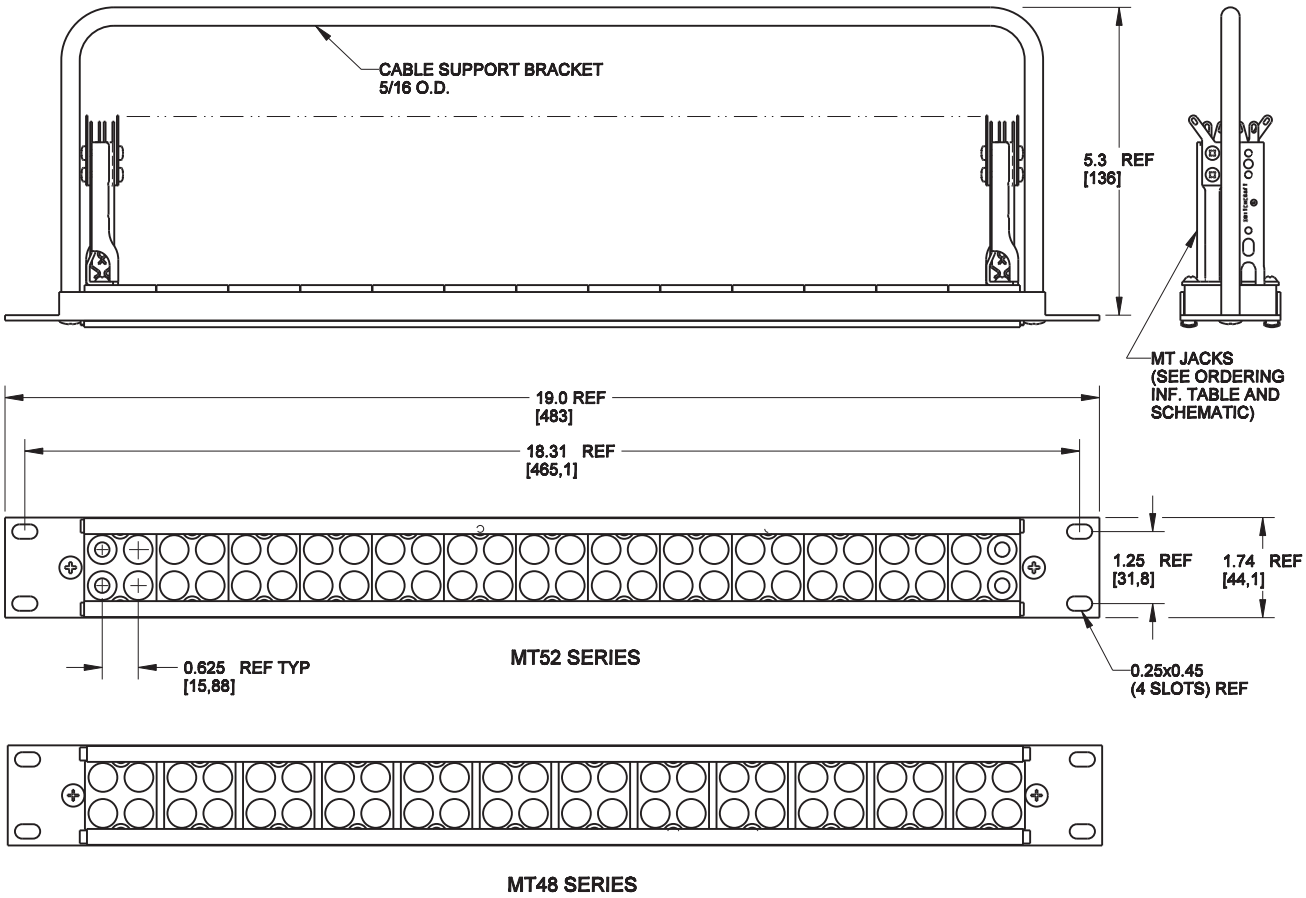

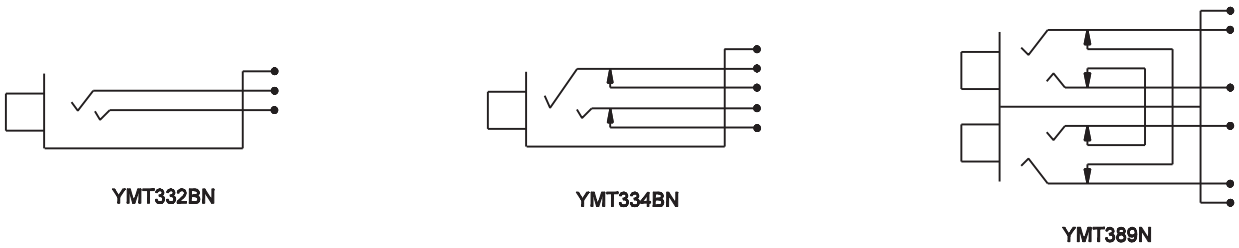

JACK SCHEMATICS
"N" SUFFIX DENOTES WELDED GOLD CONTACTS
AND NICKEL-PLATED FRAME

DIMENSIONS ARE FOR REFERENCE ONLY Inch (mm)

Switchcraft®
www.switchcraft.com
5555 North Elston Avenue / Chicago, IL 60630
Phone: 773-792-2700 / Fax: 773-792-2129

TTP96AS Patchbay Series

Features and Benefits

- Unit features 96 TT jacks
- Attractive, corrosion resistant nickel-plated jacks
- Steel frame jack for superior jack life
- Extra wide labeling strips provide maximum space
- Rugged cable tie bar takes the weight of cables off the jacks
- Rugged, attractive black anodized aluminum face will not break
- Three jack configurations available for the exact switching arrangement you need: full normal, half normal, and open circuit panel
- Fanned solder terminals for easier solder connections
- Offset ground terminal for ease in making common ground buss connections
- Gold switching contacts for long-term reliability in normal-through connections

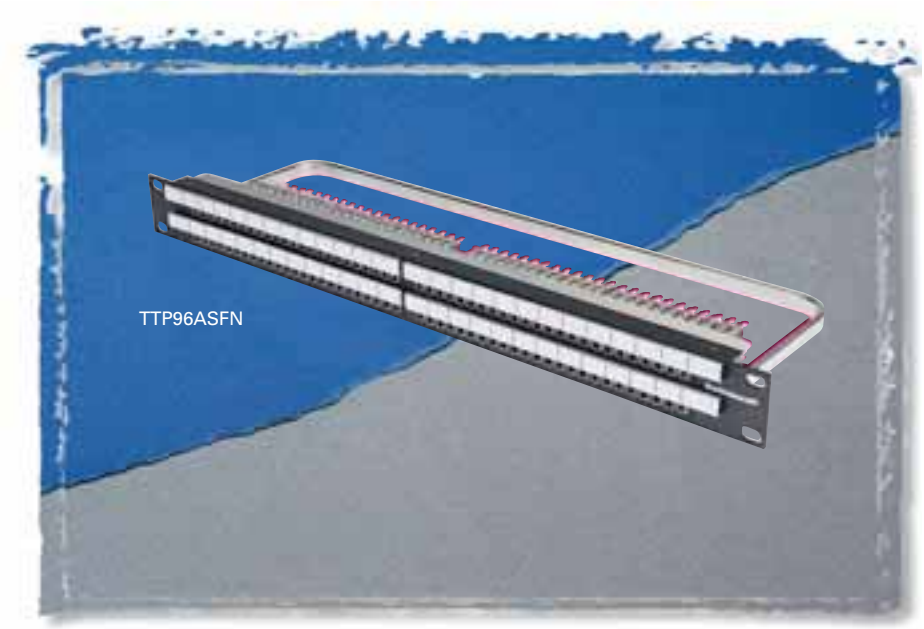

The TTP96AS Series of patchbays offer a rugged cable tie bar to support rear cabling.

Specifications

Materials

Jacks
- Frame: Steel, nickel-plated
- Bushing: Nickel-plated copper alloy
- Springs: Copper alloy solder lugs
- Ground Terminal: Steel, tin electrodeposited
- Switching Contacts: Welded, gold alloy inlay over palladium base
- Insulation: Rigid plastic spacers, rigid PVC tubing through stack
- Screws: Steel, plated

Panel
- Frame: Black anodized aluminum
- Inserts: Polyester, glass filled, 94V-0
- Cable Support Bar: Cold rolled steel, nickel-plated
- Designation Strips: Thermoplastic, 94V-0
- Designation Strip Covers: Clear thermoplastic, SE-1
- Marking Strip: Rigid vinylite
- Jack Mounting Screws: Steel, plated
- Screws: Steel, black plated

Mechanical

- Life: 30,000 cycles
- Insertion Force: 7 lbs. maximum
- Withdrawal Force: 1 lb. minimum
- Environmental: 0˚C to +50˚C

Electrical

- Contact Resistance: 30 milliohms maximum initial
- Insulation Resistance: 10,000 megohms maximum
- Dielectric Withstanding Voltage: 500VAC at 60 Hz
- Working Voltage: 140VDC maximum
- Current Rating: 100 milliamps

Ordering Information

Part Number	Type of Jack	No. of Jacks	Description
TTP96ASFN	TT	96	Full normals
TTP96ASHN	TT	96	Half normals
TTP96ASNN	TT	96	No normals

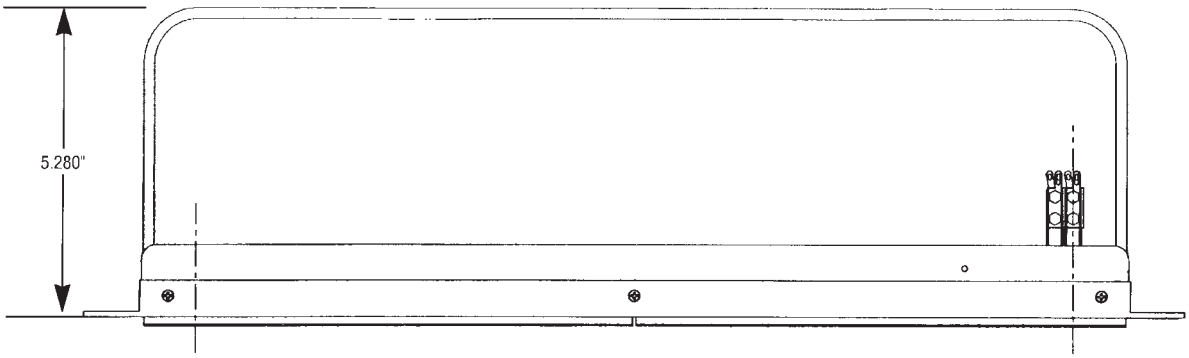

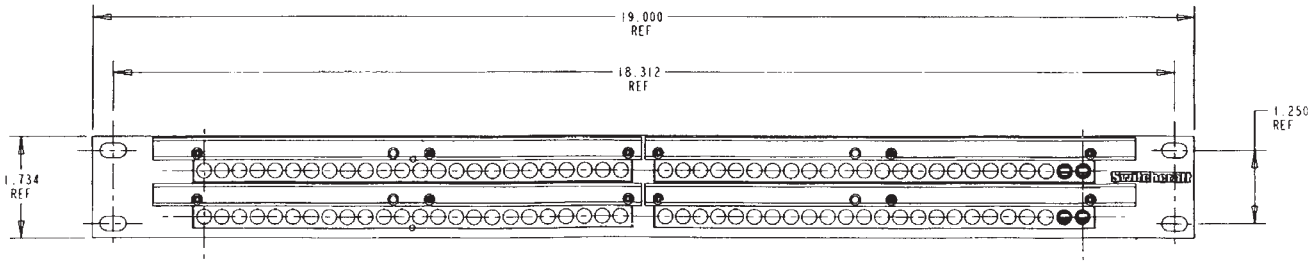

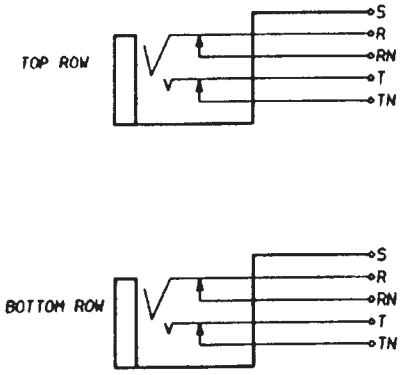

TTP96ASFN

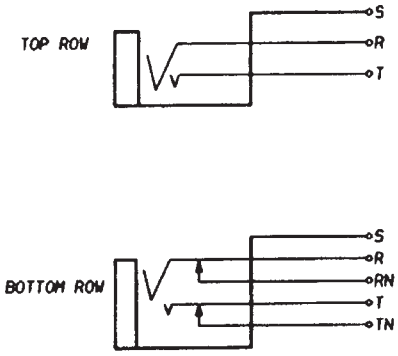

TTP96ASHN

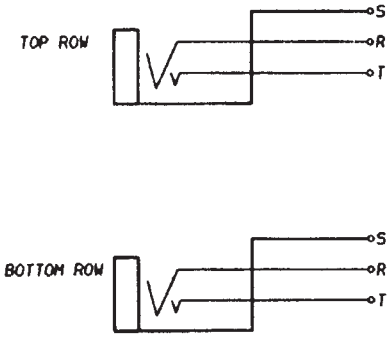

TTP96ASNN

DIMENSIONS ARE FOR REFERENCE ONLY Inch (mm)

Switchcraft®
www.switchcraft.com
5555 North Elston Avenue / Chicago, IL 60630
Phone: 773-792-2700 / Fax: 773-792-2129

HPC Patchbay Series

Features and Benefits

- Available in 1RU or 2RU versions
- Available with or without connectors
- HPC Series connectors are compatible with Neutrik Speakon® connectors
- Cable tie bar takes weight of the cables off the terminations
- Rugged aluminum channel
- Silk-screen designation area makes it easy to re-label channels

Panel Materials

Housing: Thermoplastic UL 94V-0 rated
Contacts: Silver-plated over copper alloy
Frame: Aluminum, black anodized
Cable Tie Bar: Steel, black epoxy

HP Connector Specifications

Mechanical

Shock: Per Mil-Std 202, Method 213B, Cond. K
Vibration: Mil-Std 202, Method 201A
Life: 1,000 rotational cycles
Cable Range (cord mount): 10AWG, 0.560" cable OD maximum

Electrical

Voltage Rating: 1,500 AC RMS, per Mil-Std 202, Method 301
Current Rating (Faston® terminals): 50A RMS w/10AWG wire, normal ambient, per UL 1977
Current Rating (PC terminals): 30A per UL 1977
Contact Resistance: 1mΩ, 1.5mΩ after 1,000 insertion/withdrawals
Insulation Resistance: .2TΩ

Environmental

Salt Spray: Mil-Std 202, Method 101D, Cond.B
Thermal Shock: Mil-Std 202, Method 107G
Temperature Limits: -55˚C to +85˚C
Moisture Resistance: Mil-Std 202, Method 106E
Life @ Ambient Temperature: Mil-Std 202, Method 108A
Touchproof: IEC 65 and 1010-1
IP Rating: IEC 529, IP 25

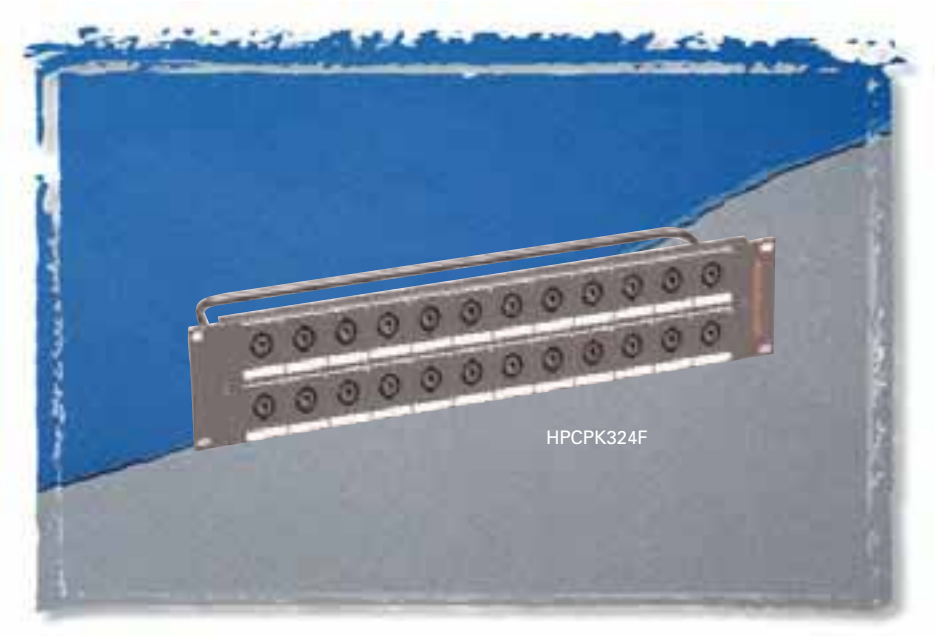

The HPC Patchbay features a 19" rack unit loaded with HPC Series connectors. Available with either 0.250" Faston® terminals or 0.187" Faston® terminals. One rack unit height versions come with 12 HPC connectors, two rack unit height versions come with 24 HPC connectors. All versions have a rugged cable tie bar, which takes the weight of the cabling away from the connections.

Materials

Housings: Thermoplastic UL 94V-0 rated
Seal Rings: Thermoplastic rubber
Contacts: Silver-plated over copper alloy

Ordering Information

Part Number	Height	Description
HPCPK112F	1.75"	12 connectors, 0.250" Fastons
HPCPK112F1	1.75"	12 connectors, 0.187" Fastons
HPCPK1B	1.75"	Blank panel
HPCPK324F	3.50"	24 connectors, 0.250" Fastons
HPCPK324F1	3.50"	24 connectors, 0.187" Fastons
HPCPK3B	3.50"	Blank panel

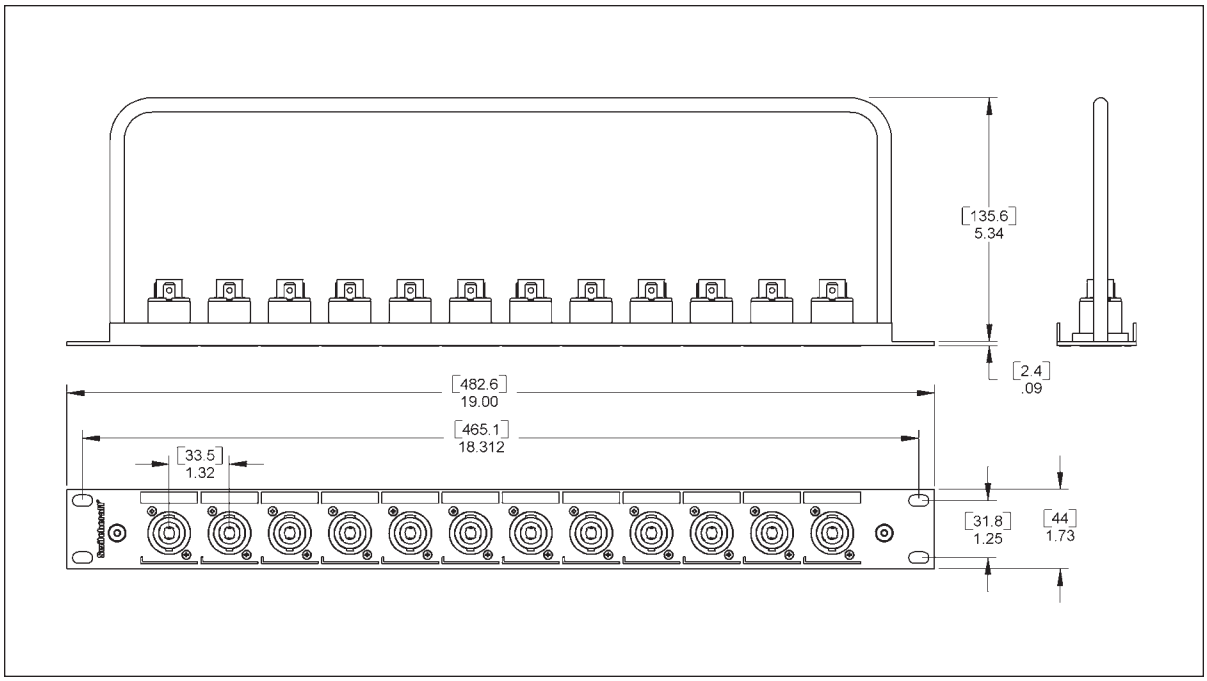

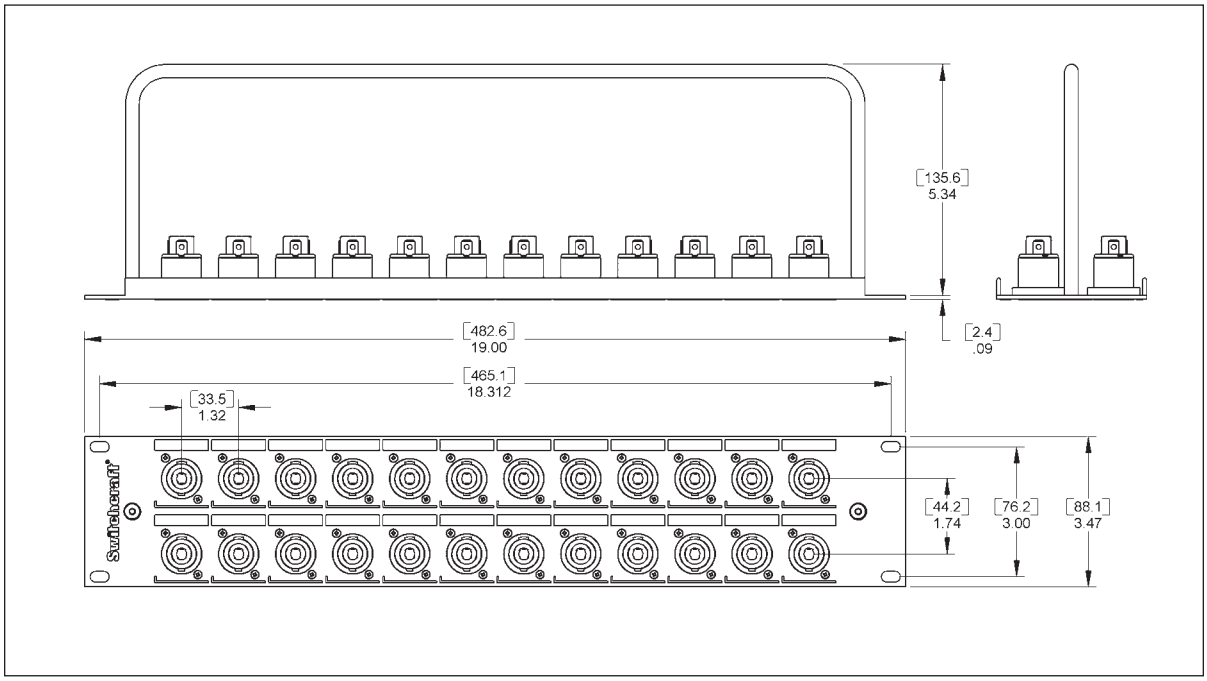

DIMENSIONS ARE FOR REFERENCE ONLY Inch (mm)

Switchcraft®
www.switchcraft.com
5555 North Elston Avenue / Chicago, IL 60630
Phone: 773-792-2700 / Fax: 773-792-2129

Q-G® Patchbay Series

Features and Benefits

- Available in 1RU or 2RU versions
- Available with or without the connectors
- E Series connectors are silver-plated, 3 pins/contacts with black finish
- Cable tie bar takes the weight of the cables off the solder terminations
- Rugged aluminum channel increases durability
- Silk-screen designation area makes it easy to re-label channels

Specifications

Materials

Connectors
Housing: Die-cast, black velvet finish
Inserts: Glass-filled thermoplastic
Pin/Contacts: Copper alloy, silver-plated
Latch Release: Steel, nickel-plated
Insert Locking Cam: Die-cast zinc

Frame
Aluminum, black anodized

Cable Tie Bar
Steel, black epoxy

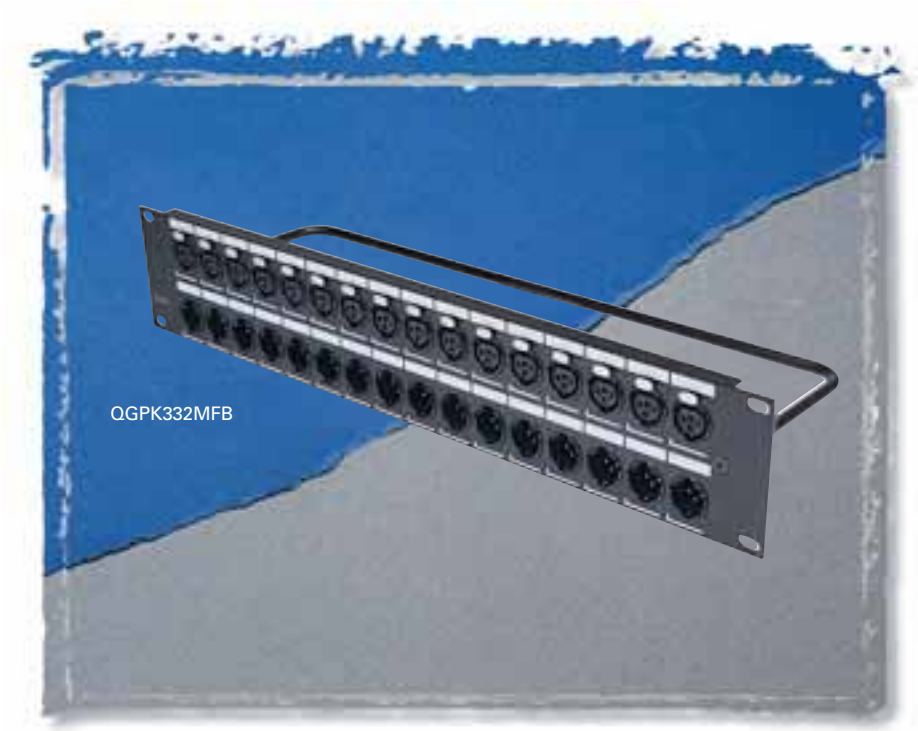

The QG® Patchbay features a 19" rack unit loaded with E Series QG® connectors. These XLR's have the same panel cut-out, male or female, silver-plated pins or contacts, and a black finish. All connectors have solder cup terminals for easy soldering and the inserts are removable from the back, allowing for easy changes. The one rack unit height version comes with 16 male, or 16 female, or 8 male and 8 female connectors. The two rack unit version comes with 16 male and 16 female connectors. We also offer the unit without connectors, but with the panel cut-outs already punched out.

All versions have a rugged cable tie bar, which takes the weight of the cabling away from the solder connections.

Ordering Information

Part Number	Height	Description
QGPK116FB	1.75"	16 female
QGPK116MB	1.75"	16 male
QGPK18M8FB	1.75"	8 male, 8 female
QGPK332MFB	3.5"	16 female(top), 16 male (bottom)
QGPK1B	1.75"	Blank panel
QGPK3B	3.5"	Blank panel

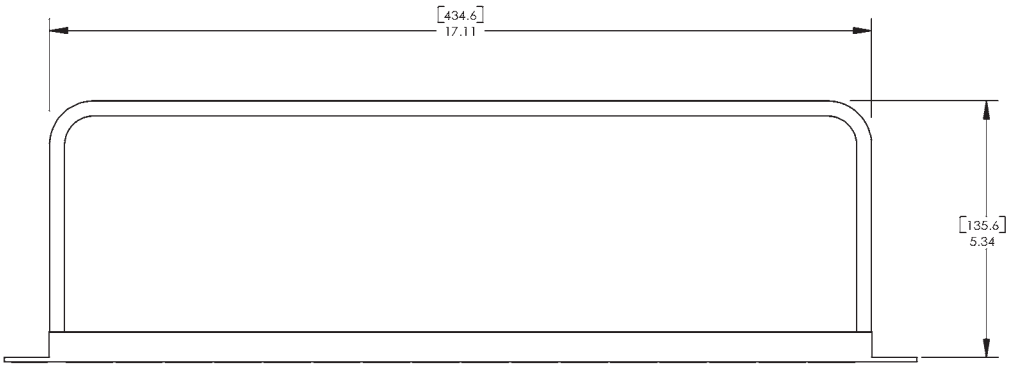

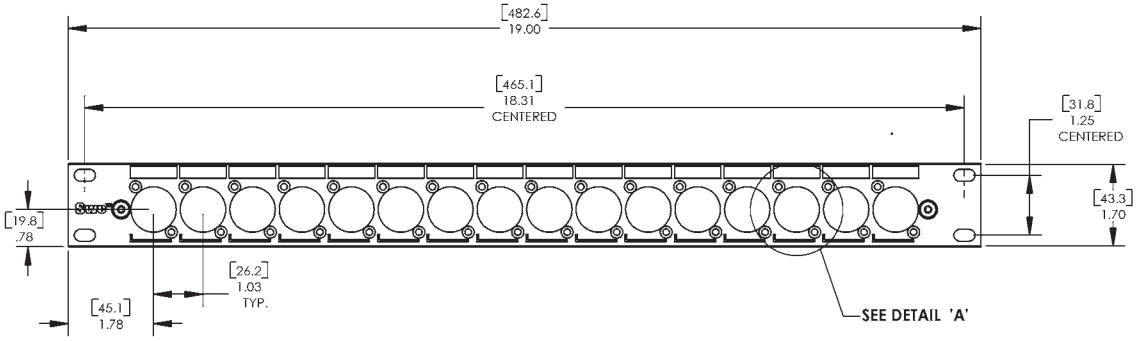

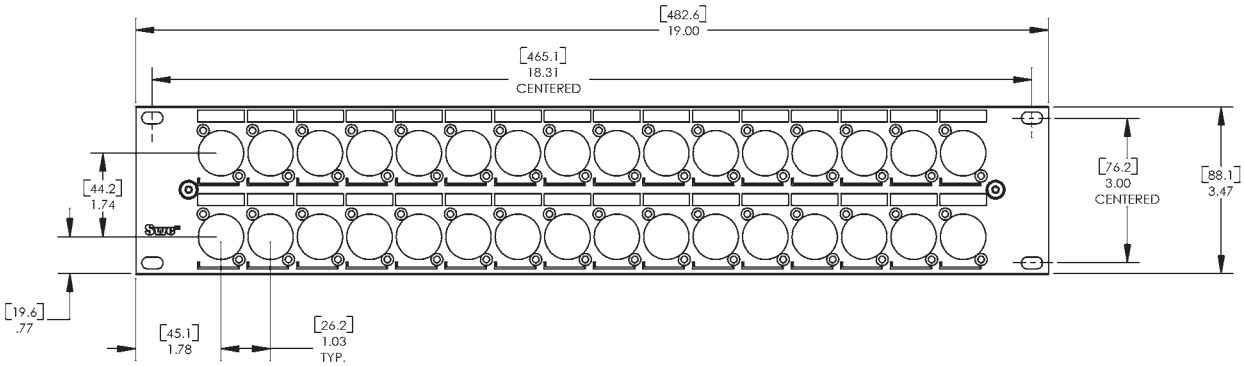

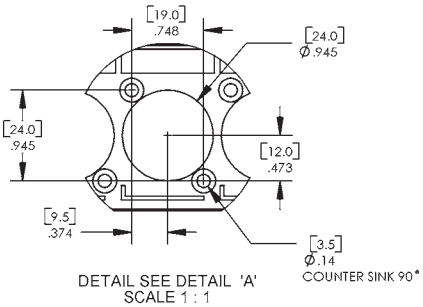

DIMENSIONS ARE FOR REFERENCE ONLY $\frac{\text{Inch}}{\text{(mm)}}$

Switchcraft®
www.switchcraft.com
5555 North Elston Avenue / Chicago, IL 60630
Phone: 773-792-2700 / Fax: 773-792-2129

VPP Video Patchbay Series

Features and Benefits

- HD Series rated from DC to 3.0 GHz
- SD Series has a bandwidth from DC to 1.75GHz
- Black thermoplastic modules insulate jacks from chassis
- Jacks feature rugged heavy duty housings

Video Jack Specifications

Electrical

Rated Bandwidth: 3.0 GHz (HD), 1.75 GHz (SD)
Characteristic Impedance: 75 ohms
Return Loss: Better than –15 dB
Insertion Loss: Better than –.5 dB
Contact Resistance: Less than 20 milliohms
Termination Resistance: 75 W, ±1%
Center Conductor: Accepts .090 pin diameter

Mechanical

Mechanical Shock: Per MIL-STD-202, Method 213, Test condition I
Vibration: Per MIL-STD-202, Method 201
Life Cycle: 30,000

Materials

Housing: Zinc alloy, nickel plated
Center Contacts: Copper alloy, gold plated
Switching Springs: Copper alloy, gold plated
Grounding Contacts:
HD Series - Copper alloy, gold plated
SD Series - Copper alloy, nickel plated
Insulators: Thermoplastic, UL 94V-0 rated

Environmental

Operating Temperature: – 40°C to 65°C
Storage Temperature: – 55°C to 85°C
Thermal Shock: Per MIL-STD-202, Method 107
Moisture and Humidity: Per MIL-STD-202, Method 106

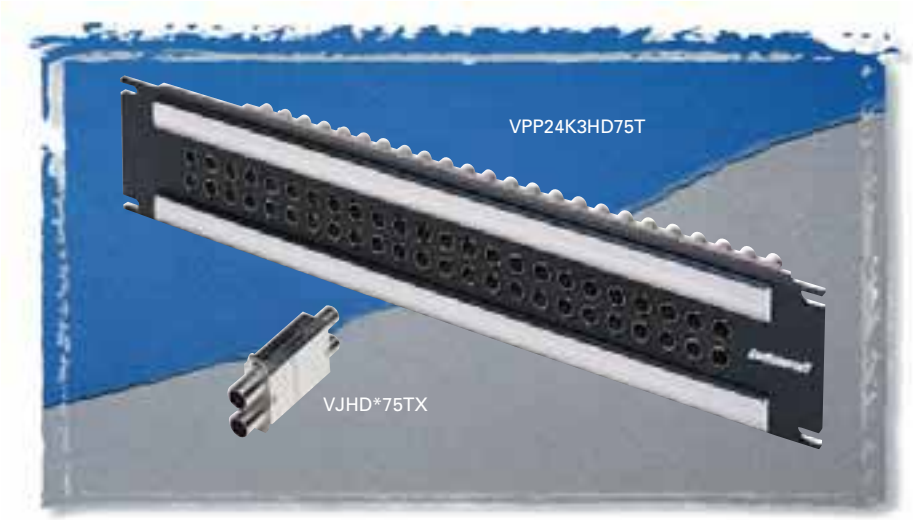

The VPP Series video patchbays offer a wide variety of options for video patching. The HD Series meets SMPTE 292M specifications for high definition video signaling, covering a bandwidth range from DC to 3.0GHz. The SD Series is perfect for serial digital, with a bandwidth from DC to 1.75GHz. Both come in either terminated or non-terminated, 24 or 26 jacks, 1.75" or 3.5" heights.

Ordering Information

Part Number	Type of Jack	No. of Jacks	Height	Description
VPP24K1HD*75T	HD	24	1.75"	Terminated
VPP24K1HD*NT	HD	24	1.75"	Non-term
VPP24K1SD*75T	SD	24	1.75"	Terminated
VPP24K1SD*NT	SD	24	1.75"	Non-term
VPP26K1HD*75T	HD	26	1.75"	Terminated
VPP26K1HD*NT	HD	26	1.75"	Non-term
VPP26K1SD*75T	SD	26	1.75"	Terminated
VPP26K1SD*NT	SD	26	1.75"	Non-term
VPP24K3HD*75T	HD	24	3.5"	Terminated
VPP24K3HD*NT	HD	24	3.5"	Non-term
VPP24K3SD*75T	SD	24	3.5"	Terminated
VPP24K3SD*NT	SD	24	3.5"	Non-term
VPP26K3HD*75T	HD	26	3.5"	Terminated
VPP26K3HD*NT	HD	26	3.5"	Non-term
VPP26K3SD*75T	SD	26	3.5"	Terminated
VPP26K3SD*NT	SD	26	3.5"	Non-term

* Add "N" for non-normalled version

See Page 36 for Individual Jacks Ordering Information

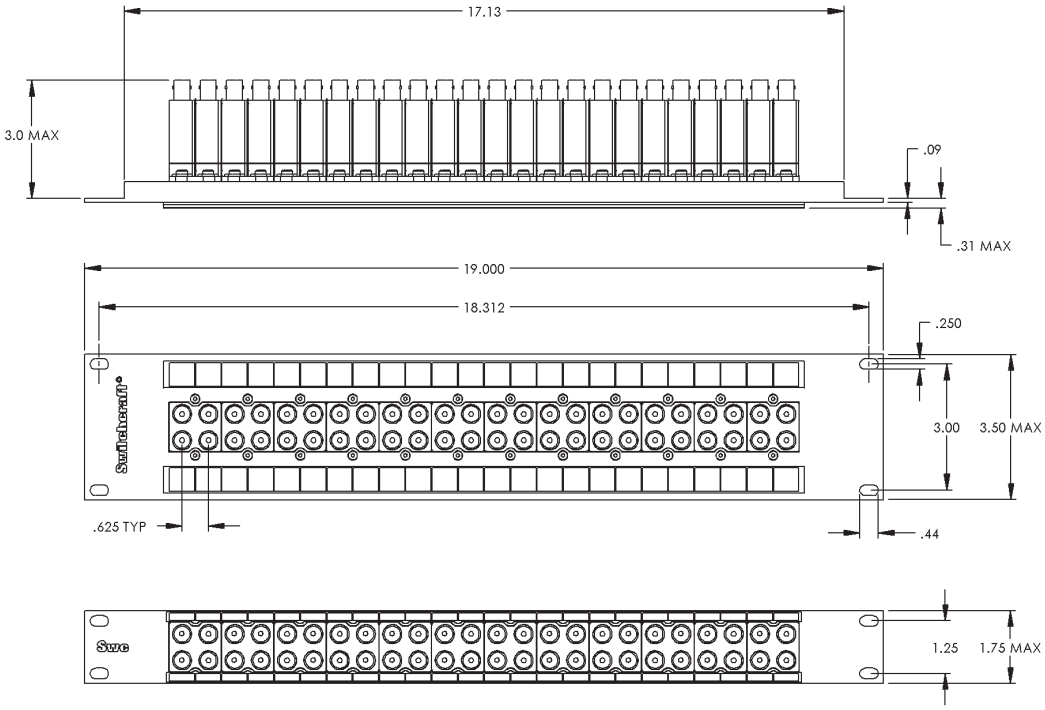

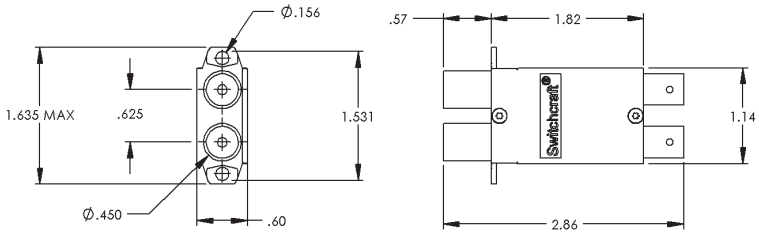

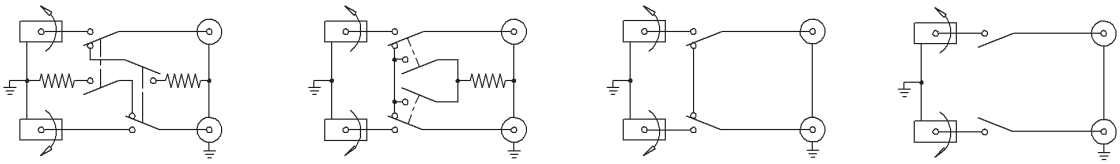

NON-NORMALLED TERMINATED | NORMALLED TERMINATED | NORMALLED NON-TERMINATED | NON-NORMALLED NON-TERMINATED

DIMENSIONS ARE FOR REFERENCE ONLY $\frac{\text{Inch}}{\text{(mm)}}$

Switchcraft®
www.switchcraft.com

5555 North Elston Avenue / Chicago, IL 60630
Phone: 773-792-2700 / Fax: 773-792-2129

VPP Video Patchbay Series

Ordering - Individual Jacks

Part Number	Type	Description
VJHD*75TX	HD	Terminated
VJHD*NTX	HD	Non-terminated
VJSD*75TX	SD	Terminated
VJSD*NTX	SD	Non-terminated

* Add "N" for non-normalled version

SMITH CHART (TYPICAL)

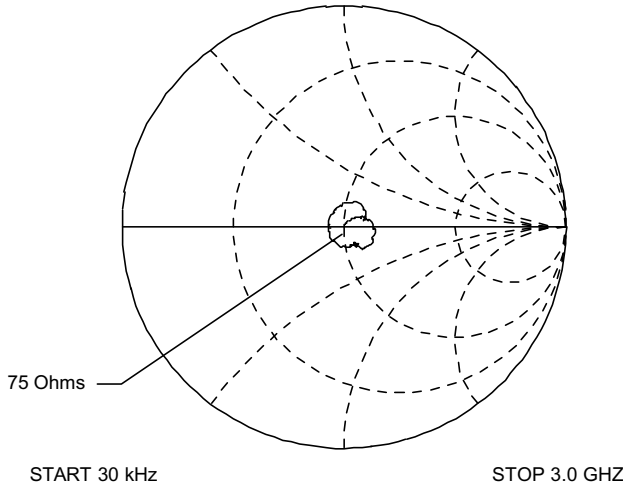

RETURN LOSS (TYPICAL)

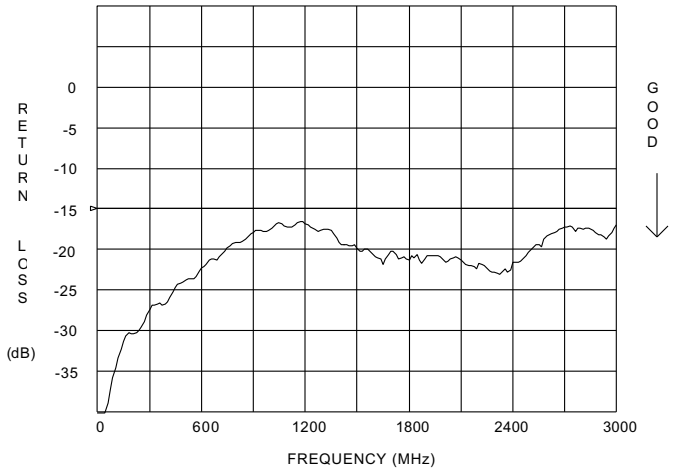

INSERTION LOSS (TYPICAL)

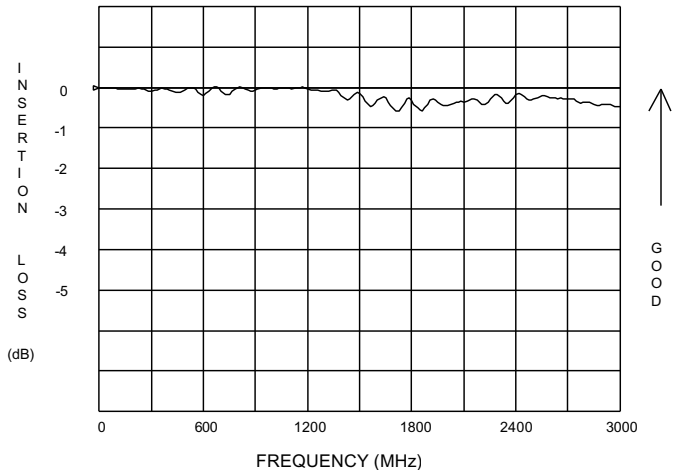

MVP Midsize Video Patchbay Series

Features and Benefits

- Midsize video jacks rated from DC to 3 GHz
- 32 midsize jacks mounted either 1RU, 1.5RU or 2RU panel
- Available in terminated or non-terminated configurations

Specifications

Materials

Frame: Aluminum, black anodized
Designation Strips: Vinylite, white
Designation Strip Covers: Lexan, transparent
Jack Inserts: Thermoplastic, UL 94V-0 rated

Midsize Video Jack Specifications

Electrical

Rated Bandwidth: 3.0 GHz
Characteristic Impedance: 75 ohms
Return Loss: See Typical Return Loss Chart
Insertion Loss: See Typical Insertion Loss Chart
Contact Resistance: Less than 20 milliohms
Termination Resistance: 75 W, ±1%
Center Conductor: Accepts .048 pin diameter

Mechanical

Mechanical Shock: Per MIL-STD-202, Method 213, Test condition I
Vibration: Per MIL-STD-202, Method 201
Life Cycle: 30,000

Materials

Housing: Zinc alloy, nickel plated
Center Contacts: Copper alloy, gold plated
Switching Springs: Copper alloy, gold plated
Grounding Contacts: Copper alloy, gold plated
BNC Insulators: Teflon
Actuators: Thermoplastic, UL94V-0 rated

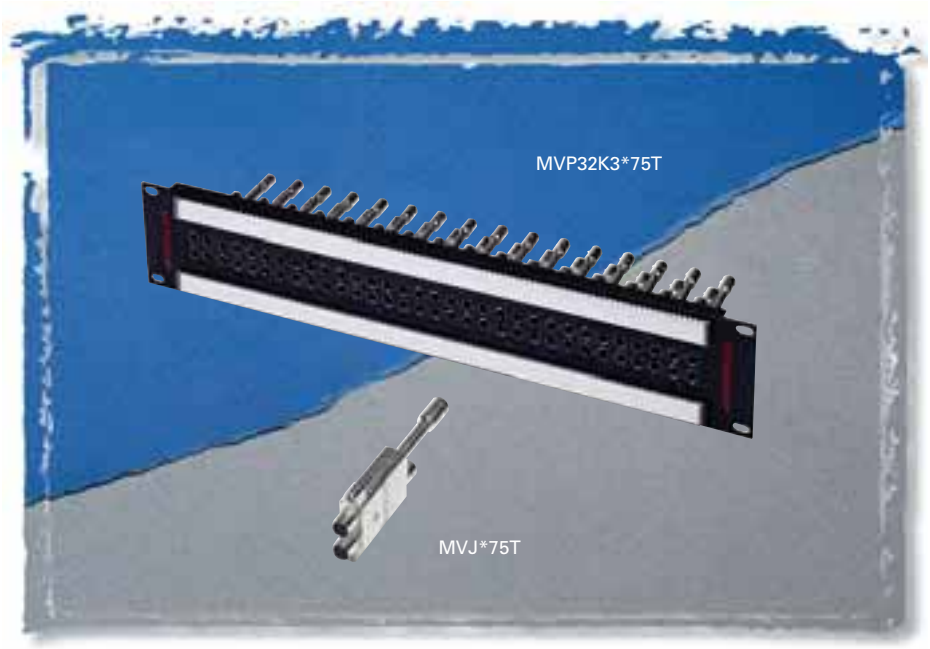

The MVP Series video patchbays offer outstanding performance and high density. Patchbays consist of 32 jacks in either 1RU or 2RU heights, jacks come either terminated or non-terminated. These jacks are rated from DC to 3 GHz, and are rated at 30,000 lifecycles. The 1.5RU and 2RU come with cable tie bars.

Environmental

Operating Temperature: – 40°C to 65°C
Storage Temperature: – 55°C to 85°C
Thermal Shock: Per MIL-STD-202, Method 107
Moisture and Humidity: Per MIL-STD-202, Method 106

Ordering Information

Part Number	Type of Jack	Height	Description
MVP32K1*75T	Midsize	1.75"	Terminated
MVP32K1*NT	Midsize	1.75"	Non-terminated
MVP32K2*75T	Midsize	2.62"	Terminated
MVP32K2*NT	Midsize	2.62"	Non-terminated
MVP32K3*75T	Midsize	3.5"	Terminated
MVP32K3*NT	Midsize	3.5"	Non-terminated

*** Add "N" for non-normalled version**

See Page 39 for Individual Midsize Jacks Ordering Information

5555 North Elston Avenue / Chicago, IL 60630
Phone: 773-792-2700 / Fax: 773-792-2129

MVP Midsize Video Patchbay Series

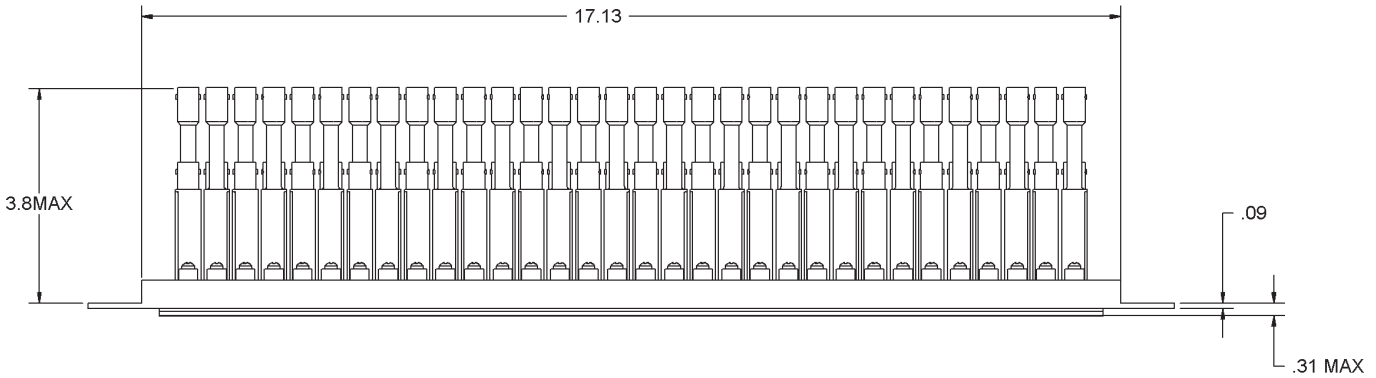

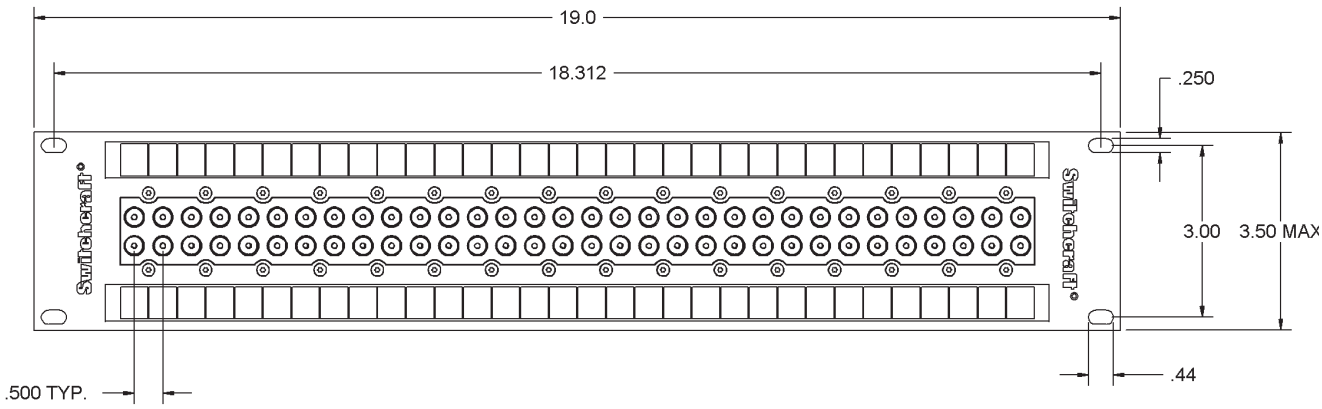

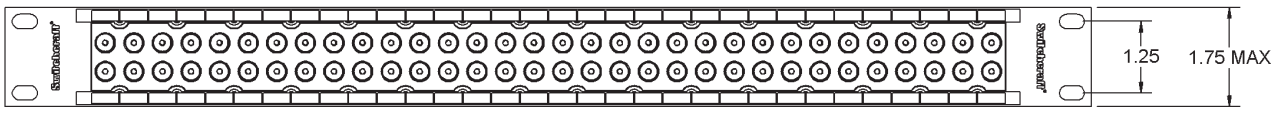

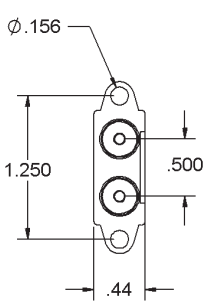

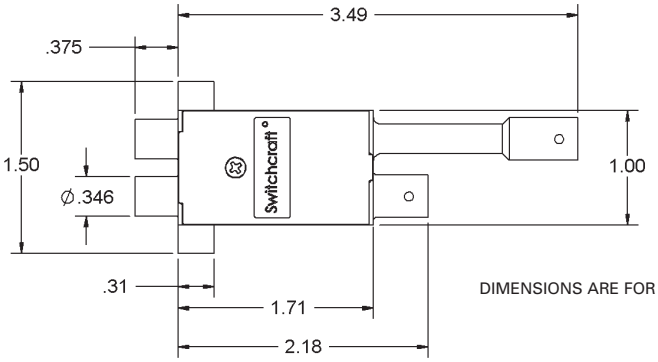

DIMENSIONS ARE FOR REFERENCE ONLY Inch (mm)

Switc

Ordering - Individual Midsize Jacks

Part Number	Type	Description
MVJ*75T	HD	Terminated
MVJ*NT	HD	Non-terminated

* Add "N" for non-normalled version

SMITH CHART (TYPICAL)

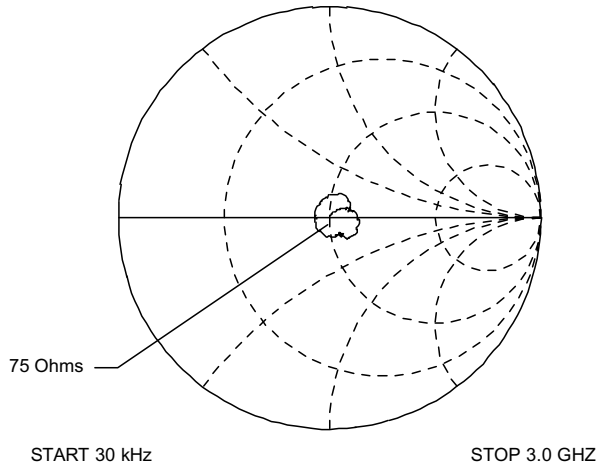

RETURN LOSS (TYPICAL)

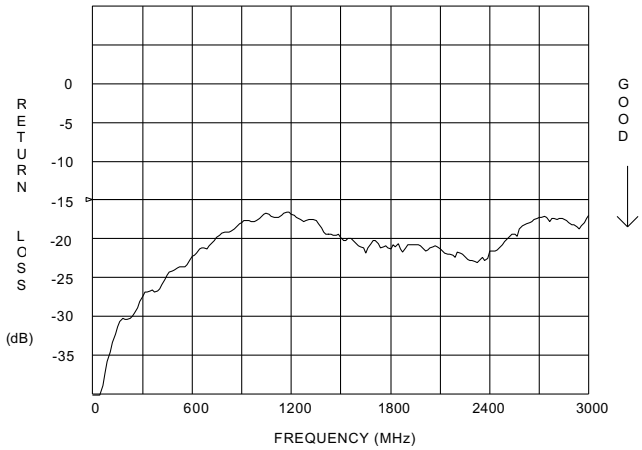

INSERTION LOSS (TYPICAL)

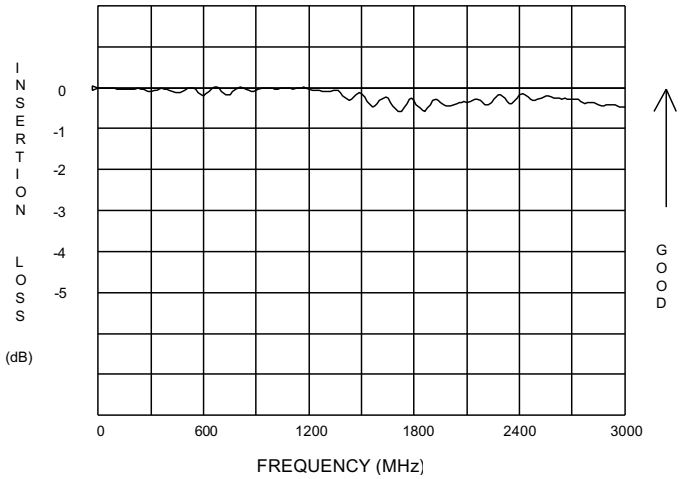

DIMENSIONS ARE FOR REFERENCE ONLY Inch (mm)

Switchcraft®
www.switchcraft.com
5555 North Elston Avenue / Chicago, IL 60630
Phone: 773-792-2700 / Fax: 773-792-2129

VAP Video/Audio Patchbay Series

Features and Benefits

- Combines 13 video jacks and 26 long-frame audio jacks into one patchbay
- Available with either HD Series or SD Series video jacks
- All audio jacks are nickel-plated with steel frames and gold-plated switching contacts
- Audio modules consist of 4 YMT334BN jacks, video modules consist of 2 dual video jacks

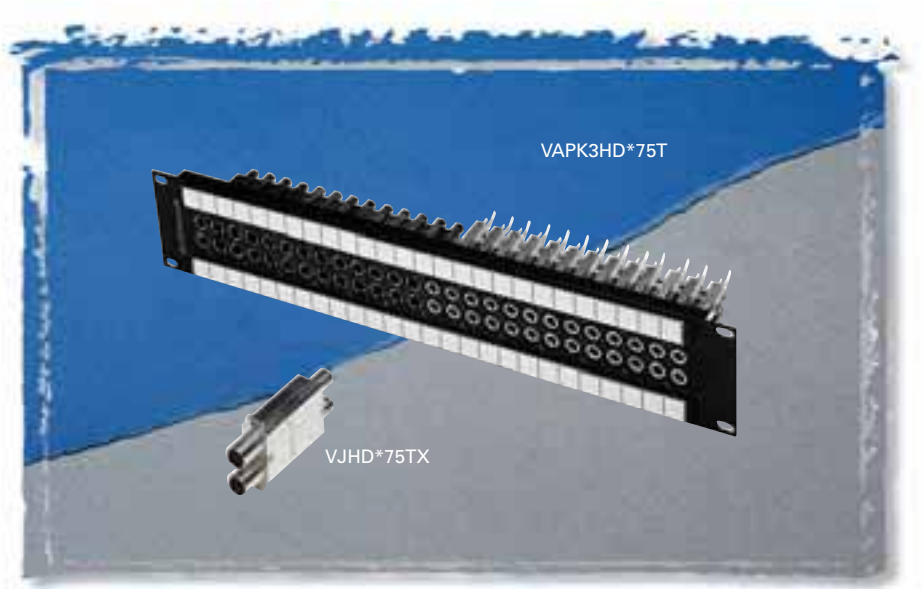

The VAP Series combines audio and video in one convenient patchbay. Standard versions consist of 13 video jacks and 26 long-frame audio jacks into one unit. Options include HD Series video jacks which are rated from DC to 2.4GHz or SD Series rated from DC to 1.5GHz. Both come in either terminated or non-terminated jacks. The MT Style audio jacks all have nickel-plated steel frames and gold-plated switching contacts. Flared terminals make soldering easier. All audio jacks are T,R,S, TN, and RN. Individual modules are useful for custom configurations.

Video Jack Specifications

Electrical

Rated Bandwidth: 2.4 GHz (HD), 1.75 GHz (SD)
Characteristic Impedance: 75 ohms
Return Loss: Better than –15 dB
Insertion Loss: Better than –.5 dB
Contact Resistance: Less than 20 milliohms
Termination Resistance: 75 W, ±1%
Center Conductor: Accepts .090 pin diameter

Mechanical

Mechanical Shock: Per MIL-STD-202, Method 213, Test condition I
Vibration: Per MIL-STD-202, Method 201
Life Cycle: 30,000

Materials

Housing: Zinc alloy, nickel plated
Center Contacts: Copper alloy, gold plated
Switching Springs: Copper alloy, gold plated
Grounding Contacts:
HD Series - Copper alloy, gold plated
SD Series - Copper alloy, nickel plated
Insulators: Thermoplastic, UL 94V-0 rated

Environmental

Operating Temperature: – 40°C to 65°C
Storage Temperature: – 55°C to 85°C
Thermal Shock: Per MIL-STD-202, Method 107
Moisture and Humidity: Per MIL-STD-202, Method 106

Ordering Information

Part Number	Type of Jack	Height	Description
VAPK1HD*75T	HD	1.75"	Terminated
VAPK1HD*NT	HD	1.75"	Non-terminated
VAPK1SD*75T	SD	1.75"	Terminated
VAPK1SD*NT	SD	1.75"	Non-terminated
VAPK3HD*75T	HD	3.5"	Terminated
VAPK3HD*NT	HD	3.5"	Non-terminated
VAPK3SD*75T	SD	3.5"	Terminated
VAPK3SD*NT	SD	3.5"	Non-terminated
Modules			
VMAFN	MT Style		4- YMT334BN jacks
VMVHD*75T	HD		2- HD terminated jacks
VMVHD*NT	HD		2- HD non-terminated jacks
VMVSD*75T	SD		2- SD terminated jacks
VMVSD*NT	SD		2-SD non-terminated jacks

* Add "N" for non-normalled version

See Page 36 For Video Jack Ordering Information and Page 69 For Audio Jack Ordering Information

Switc

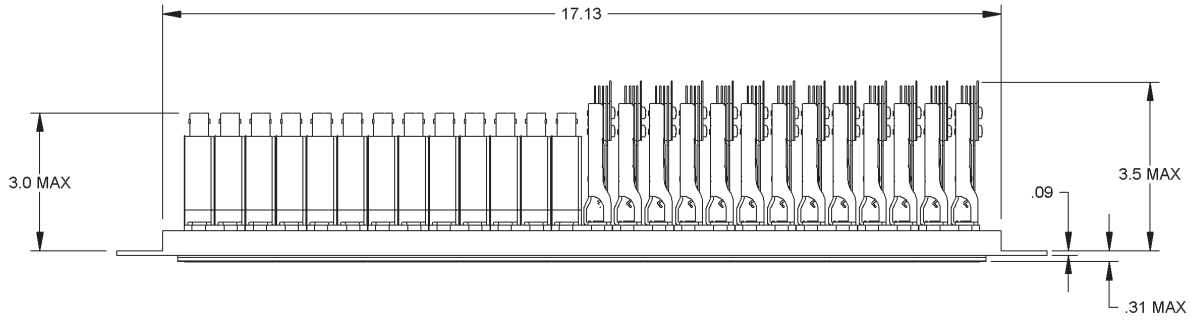

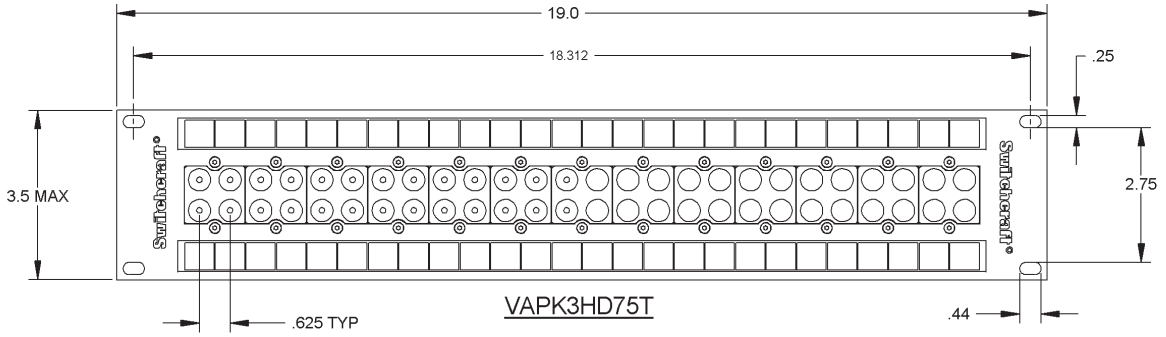

VAPK3HD75T

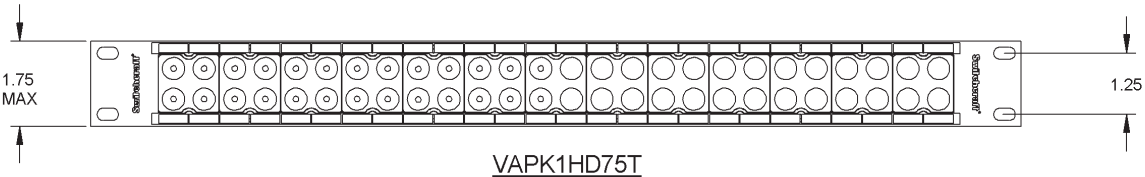

VAPK1HD75T

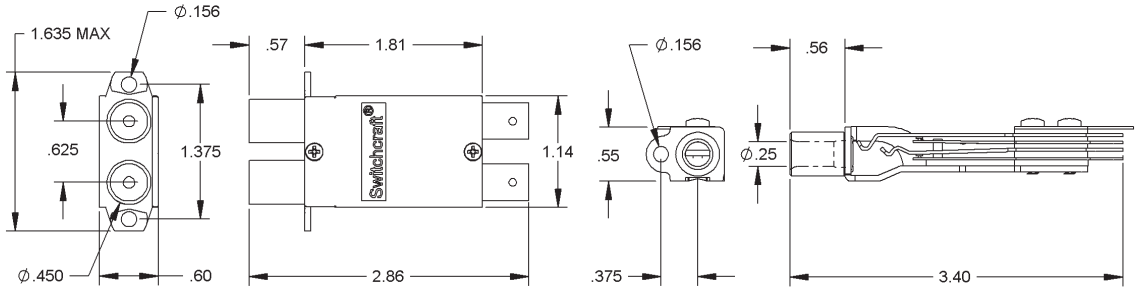

VIDEO JACK

YMT JACK

DIMENSIONS ARE FOR REFERENCE ONLY Inch (mm)

Switchcraft®
www.switchcraft.com
5555 North Elston Avenue / Chicago, IL 60630
Phone: 773-792-2700 / Fax: 773-792-2129

MVEZN Audio/Midsize Patchbay Series

Features and Benefits

- Combines 16 midsize video jacks and 24 dual EZ Norm bantam jacks.
- Video jacks are rated from DC to 3.0 GHZ.
- Rugged, attractive anodized aluminum frame for increased reliability.
- All audio jacks utilize EZ Norm technology for easy normal reconfiguration. A simple twist of the normal cam changes the normal function from full, to half, to no normals.
- Cable tie bar removes weight off the rear terminations.
- Large designation strips for easy patch point identification.

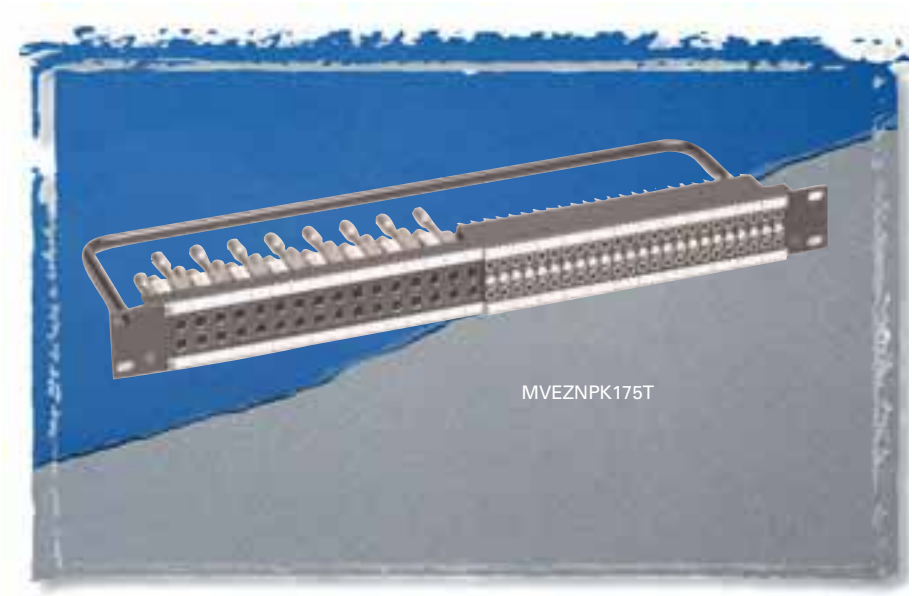

Video Jack Specifications

See page 39 for details

Audio Jack Specifications

See page 10 for details

The MVEZN Series combines our popular MVJ midsize video jacks with our latest bantam jack, the EZ Norm. This patchbay has 16 video jacks and 24 dual EZ Norm bantam jacks. Perfect for application where a full video and audio patchbay are unnecessary. The video jacks are rated up to 3.0GHz, and the audio jacks meet 30,000 cycles, both in insertion/withdrawals and with the normal cam.

Part Number: MVEZNPK175T

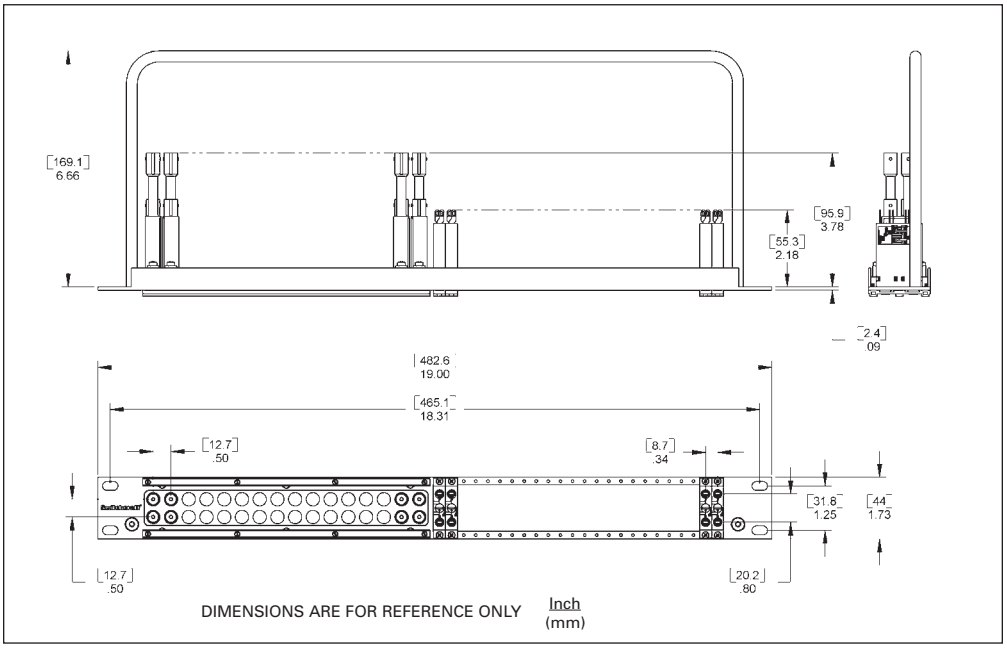

MBPK Video/Audio Patchbay Series

Features and Benefits

- Combines 16 midsize video jacks and 48 TT bantam audio jacks.
- Video jacks are rated from DC to 3.0 GHZ.
- All audio jacks are nickel-plated with steel frames and gold-plated cross-bar switching contacts.
- Rugged, attractive anodized aluminum frame for increased reliability.
- Large designation strips for easy patch point identification.
- Audio jacks rated at 30,000 cycles.

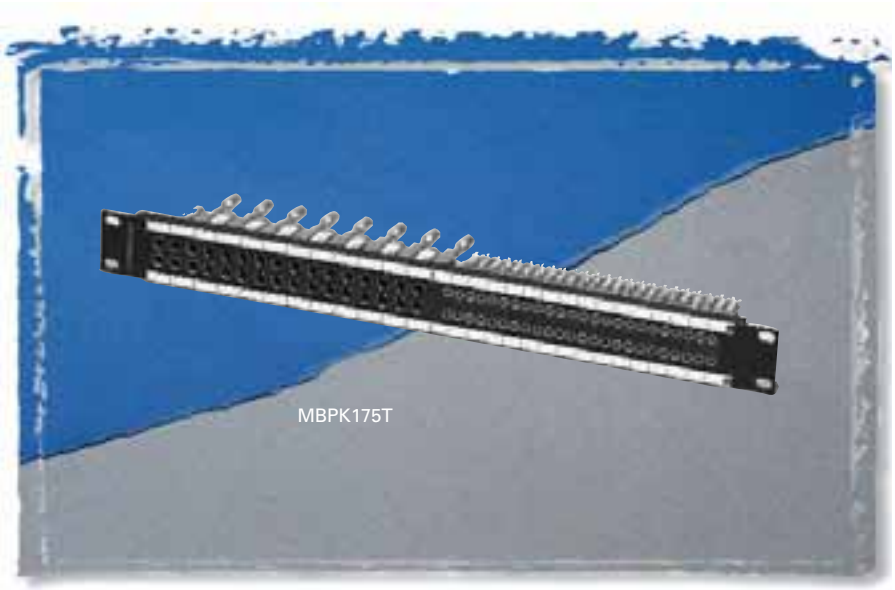

Video Jack Specifications

See page 39 for details

Audio Jack Specifications

See page 69 for details

Materials

Frame: Aluminum, black anodized

The MBPK Series combines our popular MVJ midsize video jacks with our standard nickel-plated, steel frame audio jacks. This patchbay combines 16 midsize video jacks with 48 TT bantam audio jacks. Perfect for applications where a full video and audio patchbay are unnecessary. The video jacks are rated up to 3.0GHz, and the audio jacks meet 30,000 cycles. The audio jacks have T, R, S, TN, and RN terminals, and feature gold-plated contacts and flared solder terminals.

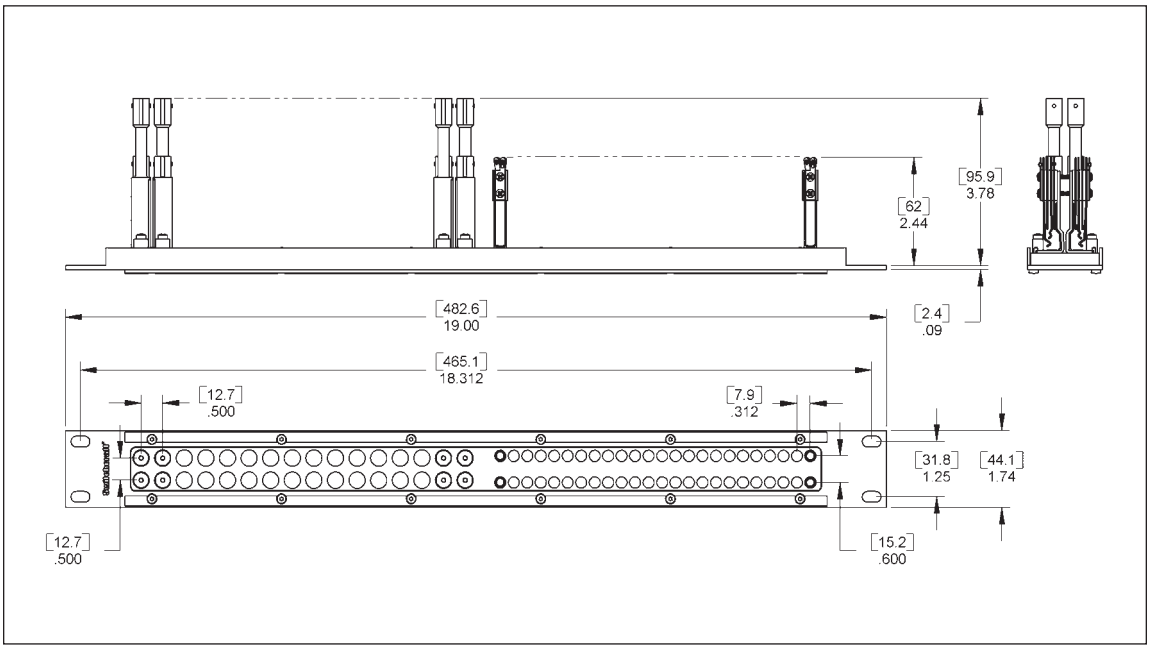

DIMENSIONS ARE FOR REFERENCE ONLY Inch (mm)

Switchcraft®
www.switchcraft.com
5555 North Elston Avenue / Chicago, IL 60630
Phone: 773-792-2700 / Fax: 773-792-2129

PATCHCORDS/MOLDED CABLES

Audio and Video Patchcords

Features and Benefits - Audio

- 110 ohm impedance-matched digital patchcords meet AES/EBU interface standards for digital patching
- Available with a variety of plug terminations, plug finishes, cord lengths and cable colors, the patchcords offer design flexibility
- Premium quality cable insures high reliability and greater flexibility

Specifications

Standard plug terminations are single 3-conductor 1/4" and TT®
Nickel-plated plugs (standard), brass and gold-plated (optional)
Cable jacket material is PVC. Black is standard with other colors available

Features and Benefits - Video

- Designed and built to highest quality standards for efficient video signal transmission
- Cable type is RG59 (75W)
- Rugged nickel-plated handles with knurled area for positive finger grip
- Available in standard size or midsize styles

Specifications

Materials

Housing: Nickel-plated, copper alloy
Contact Pin: Gold-plated, copper alloy
Boot: Thermoplastic, in black and colors

A wide variety of audio patchcords and molded cable assemblies are available. Some of the more popular versions are the 18Q and 20Q Series for professional 1/4" patching, the TT* and TTD Series for TT or bantam AES/EBU digital patching. The VP and VMP Series offer exceptional performance for video signal patching.

Ordering Information

Video Patchcords

Part Number	Type	Part Number	Type
VP3**	Standard	VMP2**	Midsize
VP4**	Standard	VMP3**	Midsize
VP5**	Standard	VMP4**	Midsize
VP6**	Standard	VMP5**	Midsize
VP7**	Standard	VMP6**	Midsize
VP8**	Standard	VMP7**	Midsize
VP9**	Standard	VMP8**	Midsize
VP10**	Standard	VMP9**	Midsize
VSPP	Standard	VMP10**	Midsize
VMP1**	Midsize	VMPP	Midsize

When ordering, add the following for cable color: BK-Black, BL-Blue, R-Red, O-Orange, Y-Yellow, GN-Green, P-Purple, GY-Gray

Ordering Information

Part Number	Type	Plug Finger	Description
Audio Patchcords			
18QD18	1/4" Mil-Type	Brass	2 foot, black nylon jacket
18QF18	1/4" Mil-Type	Brass	3 foot, black nylon jacket
18QH18	1/4" Mil-Type	Brass	4 foot, black nylon jacket
20QD20N*	1/4" Mil-Type	Nickel	2 foot, nylon jacket
20QF20N*	1/4" Mil-Type	Nickel	3 foot, nylon jacket
20QH20N*	1/4" Mil-Type	Nickel	4 foot, nylon jacket

When ordering, add the following for cable color: 0-Black, 2-Red, 5-Green, 6-Blue

TT122	TT or Bantam	Brass	1 foot, molded gray jacket
TT124	TT or Bantam	Brass	2 foot, molded gray jacket
TT126	TT or Bantam	Brass	3 foot, molded gray jacket
TT127	TT or Bantam	Brass	4 foot, molded gray jacket
TT128	TT or Bantam	Brass	5 foot, molded gray jacket
AES/EBU 110 Ohm Digital Single Plug Patchcords			
TT1*	TT or Bantam	Nickel	1 foot, molded
TT2*	TT or Bantam	Nickel	2 foot, molded
TT3*	TT or Bantam	Nickel	3 foot, molded
TT4*	TT or Bantam	Nickel	4 foot, molded
TT5*	TT or Bantam	Nickel	5 foot, molded
TT6*	TT or Bantam	Nickel	6 foot, molded
TT7*	TT or Bantam	Nickel	7 foot, molded
TT8*	TT or Bantam	Nickel	8 foot, molded
TT9*	TT or Bantam	Nickel	9 foot, molded
TT10*	TT or Bantam	Nickel	10 foot, molded
AES/EBU 110 Ohm Digital, or RS422 Dual Plug Patchcords			
TTD1*	TT or Bantam	Nickel	1 foot, molded
TTD2*	TT or Bantam	Nickel	2 foot, molded
TTD3*	TT or Bantam	Nickel	3 foot, molded
TTD4*	TT or Bantam	Nickel	4 foot, molded
TTD5*	TT or Bantam	Nickel	5 foot, molded
TTD6*	TT or Bantam	Nickel	6 foot, molded
TTD7*	TT or Bantam	Nickel	7 foot, molded
TTD8*	TT or Bantam	Nickel	8 foot, molded
TTD9*	TT or Bantam	Nickel	8 foot, molded
TTD10*	TT or Bantam	Nickel	10 foot, molded

When ordering, add the following for cable color: BK-Black, BL-Blue, R-Red, O-Orange, Y-Yellow, GN-Green, P-Purple, GY-Gray

Ordering Information

Part No.	Description
Molded MIDI Cables	
MD3	3 foot, 5 pin DIN, molded black
MD6	6 foot, 5 pin DIN, molded black
MD10	10 foot, 5 pin DIN, molded black
MD15	15 foot, 5 pin DIN, molded black

Uses 4 cond., 24 awg, PVC outer jacket, braided shielded cable

1/4" Cables	
05AD05	2 foot, mono, male to male
05AK05	6 foot, mono, male to male
05AN05	10 foot, mono, male to male
05AU05	25 foot, mono, male to male
05AN15	10 foot, mono, male to RA male
05AN80	10 foot, mono, male to female
05AU80	25 foot, mono, male to female
10BF10	3 foot, stereo, male to male
10BK10	6 foot, stereo, male to male
10BN10	10 foot, stereo, male to male
15AK15	6 foot, mono, RA male to RA male
RCA	
25AF25	3 foot, male to male
25AK25	6 foot, male to male
25AN25	10 foot, male to male
25AK82	6 foot, male to female
30AK30	6 foot, RA male to RA male
30AN30	10 foot, RA male to RA male
30AR30	15 foot, RA male to RA male
1/4" to RCA	
05AK25	6 foot, 1/4" male to RCA male
05AN25	10 foot, 1/4" male to RCA male

Uses either single or 2 cond, 22awg, PVC outer jacket, braided shielded cable

DIMENSIONS ARE FOR REFERENCE ONLY Inch (mm)

5555 North Elston Avenue / Chicago, IL 60630
Phone: 773-792-2700 / Fax: 773-792-2129

Q-G® Audio Connector Series

A, AA, AAA Cord Style Series

Switchcraft offers a wide range of cord style XLR connectors.

The A Series features a dual pressure plate strain relief mechanism to securely fasten the connector to the cable. The A Series is also available with FAS-DISCONNECT detent.

The AA Series features a 1-piece strain relief mechanism that clamps onto the outer jacket of the cable.

The AAA Series features a twist-on handle with a built-in strain relief mechanism and a pre-loaded insert. The new R Series offers the same strain relief system as the AAA Series.

Specifications

Electrical

Contact Resistance: 50 milliohm maximum, per pole
Current Rating @ 125VAC: 3 pole - 15A, 4 pole -10A, 5 & 6 pole - 7.5A, 7 pole - 5A
Insulation Resistance: 1,000 MW, minimum
Dielectric Withstanding Voltage: 1,000 V (rms)
Capacitance: ≤3pF between pins and ≤6 pF between pins and shell, maximum

Mechanical

Insertion/Withdrawal Forces: 10 lbs. maximum, 8 lbs. nominal/ 7 lbs. maximum, 5 lbs. nominal

Materials

Shell: Die-Cast zinc with nickel finish or black chrome
Handle: Die cast with nickel finish or black chrome. Also black thermoplastic handle available
O Ring: TPR (Thermoplastic rubber).
Insert Insulation: Molded thermoplastic
Socket Contacts: Silver plated copper alloy tarnish resistant; bifurcated on 3 and 4 contact types. Gold is available.
Pin Contacts: Silver plated copper alloy.

See Page 56 for Mechanical Drawings

Resists tarnishing, and provides excellent electrical conductivity. Gold is available.
Latch lock: High strength die cast zinc
Multi-finger cable clamp and rubber gasket: TPR (Thermoplastic plastic & rubber)
Flex Relief: TPR (Thermoplastic rubber)

Ordering Information

Part Number	Style	Finish	Pins/ Contacts	Notes
A*F, A*M	Cord	Nickel	Silver	Standard Cable Clamp
A*FB, A*MB	Cord	Black	Silver	Standard Cable Clamp
A*FBAU, A*MBAU	Cord	Black	Gold	Standard Cable Clamp
A*FL, A*ML	Cord	Nickel	Silver	Standard cable clamp, large flex relief
AA*F, AA*M	Cord	Nickel	Silver	One piece cable clamp
AA*FB, AA*MB	Cord	Black	Silver	One piece cable clamp
AA*FBAU, AA*MBAU	Cord	Black	Gold	One piece cable clamp
AA*FL, AA*ML	Cord	Nickel	Silver	One piece cable clamp, large flex relief
AAA*FZ, AAA*MZ	Cord	Nickel	Silver	Twist-on metal handle
AAA*FBZ, AAA*MBZ	Cord	Black	Silver	Twist-on metal handle
AAA*FBAUZ, AAA*MBAUZ	Cord	Black	Gold	Twist-on metal handle
AAA*FPZ, AAA*MPZ	Cord	Nickel	Silver	Twist-on plastic handle
AAA*FPBZ, AAA*MPBZ	Cord	Black	Silver	Twist-on plastic handle
AAA*FPBAUZ, AAA*MPBAUZ	Cord	Black	Gold	Twist-on plastic handle

* Available 3 - 7 pins or contacts

Q-G® Audio Connector Series

B, C, D, E Panel Style Series

Switchcraft also offers a wide range of panel mount connectors.

The B Series features a round housing with a threaded collar for mounting. The female version requires a spanner wrench to tighten the connector to the chassis. Both male and female are available with black finish.

The C Series is another round housing panel mount, which has 0.140" mounting holes requiring #5-40 screws to mount.

The D Series, our most popular version, is a rectangle housing panel mount. The standard Rawall finish resists scratching, while the optional satin finish offers a smooth finish for mounting on a brushed finished chassis.

The E Series offers a panel mount with quick release inserts. A small screwdriver is used to remove the inserts, allowing for easy gender changes. The male and female E Series fit into the same panel cut-outs.

The E Series is also available with PC terminals. Contact the factory for details.

Ordering Information

Part Number	Style	Finish	Pins/ Contacts	Notes
B*F, B*M	Panel	Nickel	Silver	Threaded Collar
B*FB, B*MB	Panel	Black	Silver	Threaded Collar
C*F, C*M	Panel	Nickel	Silver	Uses #5-40 mounting screws
C*FB, C*MB	Panel	Black	Silver	Uses #5-40 mounting screws
D*F, D*M	Panel	Nickel	Silver	Uses #5-40 mounting screws
D*FB, D*MB	Panel	Black	Silver	Rectangle housing
D*FBAU, D*MBAU	Panel	Black	Gold	Rectangle housing
D*FS, D*MS	Panel	Nickel	Silver	Rectangle housing, smooth finish
E3FSC, E3MSC	Panel	Nickel	Silver	Male/Female same panel cut-out
E3FSCB, E3MSCB	Panel	Black	Silver	Male/Female same panel cut-out
E3FSCBAU, E3MSCBAU	Panel	Black	Gold	Male/Female same panel cut-out

* Available 3 - 7 pins or contacts

See Page 57 for Mechanical Drawings

5555 North Elston Avenue / Chicago, IL 60630
Phone: 773-792-2700 / Fax: 773-792-2129

Q-G® Audio Connector Series

J, K, P, R, T Wallplate, Gooseneck, Panel & Cord Style Series

The J and K Series are wallplates using the D Series receptacles pre-mounted. Available in single or dual connector versions.

The PD Series is a plastic panel mount series, using 94V-0 rated material. Both male and female mount into the same panel cut-out and are available in solder cup, straight PC, and right angle PC terminals.

Switchcraft also offers gooseneck connectors and cord plugs with on-off switches. The P Series are gooseneck connectors available in male or female, with optional black finishes. The male has external 5/8-27 threads, the female has internal 5/8-27 threads.

The new R Series incorporates the same strain relief system as the AAA Series. The insert can be offset at 45˚ to accommodate a wide variety of applications.

The T Series is similar to the A Series female cord plug, but offers a DPDT (2-C) locking on-off switch. The slide switch is rated at 500mA, 125V.

Ordering Information

Part Number	Style	Finish	Pins/ Contacts	Notes
J3FS	Wallplate	Nickel	Silver	Single D3F
K3FS	Wallplate	Nickel	Silver	Dual D3F's
P*F, P*M	Gooseneck	Nickel	Silver	Female ext. threads, male int.threads
P*FB, P*MB	Gooseneck	Black	Silver	Female ext. threads, male int.threads
PD3FSC1, PD3MSC1	Panel	Black	Silver	Plastic Housing
PD3FSC1AU, PD3MSC1AU	Panel	Black	Gold	Plastic Housing
R*FZ, R*MZ	Cord	Nickel	Silver	Right Angle
R*FBZ, R*MBZ	Cord	Black	Silver	Right Angle
R*FBAUZ, R*MBAUZ	Cord	Black	Gold	Right Angle
T3F	Cord	Nickel	Silver	On-off switch

* Available 3 - 7 pins or contacts

See Pages 58 and 59 for Mechanical Drawings

Tini-Q-G® Connector Series

Tini-Q-G® Cord & Panel Style Series

The Tini-QG Series is a miniature version of the standard QG Series. These "mini-XLR's" come in a wide variety of configurations. The standard TA Series cord plugs are available in 3-6 pins or contacts. The L versions, with their larger strain reliefs, are available in 3-8 pins or contacts.The TB and TY Series are panel mount connectors. The TB Series is a male connector, featuring a round panel cut-out and 3-8 pins. The TY Series is a female connector, featuring a rectangular housing and 3-5 contacts. The TA and TB Series are available with a black finish. Gold-plated contacts are available on all series. Contact the factory for details.

Materials

Housing: Plugs and Male Receptacles — Copper alloy, nickel-plated; Female Receptacles — Die-cast zinc, nickel-plated
Black Tini-Q-G® Housing: Copper alloy, black chrome-plated
Pin and Socket Contacts: Copper alloy, silver-plated
Flex Relief: Molded black thermoplastic elastomer
Latch Button: Molded black thermoplastic
Release Lever and Mounting Washer: Steel, nickel-plated
Standoff/Ground Terminal and Cable Clamp: Steel, electrotinned
Inserts and Insulating Spacer: Molded, high strength thermoplastic
Latch (Female): Copper alloy, nickel-plated
Mounting Nut: Copper alloy, nickel-plated

Ordering Information

Part Number	Style	Finish	Pins/ Contacts	Notes
TA*F, TA*M	Cord	Nickel	Silver	Available in 3 - 6 pins or contacts
TA*FL, TA*ML	Cord	Nickel	Silver	Accommodates large cable, available in 3 - 8 pins or contacts
TA*FB, TA*MB	Cord	Black	Silver	Available in 3 - 6 pins or contacts
TB*M	Panel	Nickel	Silver	Male, round flange, threaded, available in 3 - 8 pins or contacts
TB*MB	Panel	Black	Silver	Male, round flange, threaded, available in 3 - 8 pins or contacts
TY*F	Panel	Nickel	Silver	Female, rectangle flange, available in 3 - 5 pins or contacts

See Page 59 for Mechanical Drawings

Specifications

Electrical

Contact Resistance: .010 ohms maximum after life (and after salt spray)
Current Rating (Carry Only): 5A, 125 VAC (4A, 125 VAC on 5 circuit) based on 30˚C maximum
Insulation Resistance: 510,000 megohms minimum @ 500 VDC (initial); 10,000 megohms minimum (after humidity test)
Dielectric Strength: 1,000V (rms)

Mechanical

Life: 5,000 operations minimum
Solderability Standard: Meets EIA RS-186-9E
Mechanical Shock: Meets Mil-Std-202, method 213B
Vibration: Meets Mil-Std-202, method 201A
Wire Size: #22 wire gauge solid; #24 wire gauge stranded

Environmental

Thermal Range: -55˚C to +85˚C
Humidity: Meets Mil-Std-202, method 106D
Thermal Shock: Meets Mil-Std-202, method 107D
Salt Spray: Meets Mil-Std-202, method 101

Switchcraft®
www.switchcraft.com
5555 North Elston Avenue / Chicago, IL 60630
Phone: 773-792-2700 / Fax: 773-792-2129

HPC Connector Series

HPC Panel Style Series

The HPC Series is a complete line of high power loudspeaker connectors that are completely compatible with the Neutrik® Speakon® 4 pole connector series. Included in the series are round and rectangular panel mounts, straight cord plugs, right angle cord plugs, and in-line cord plug, plus a barrel adapter.

The HPC panel mounts come with two different flange depths, either 0.100" or 0.200" depths. The 0.200" depth allows for easy rear mounting of the connector and maintains proper mating with the cord plug. Also, the panel mounts have two different Faston® terminal sizes, 0.187" and 0.250" wide. Both are rated at 50A, per UL 1977. The PC mount versions have either straight, right angle, or right angle with a mounting post. They are rated at 30A per UL 1977. The right angle PC mount version with the post allows for snap-in placement onto the PC board during wave soldering.

The HPC cord plugs are offered in straight, right angle, and an in-line version. All have 0.250" Faston® terminals, rated at 50A per UL 1977, which makes it easy to swap out plugs. The unique feature of the cord plugs is their "push to lock" design. They do not require a 1/4 turn to engage the contacts – simply push the connector in like an XLR. This feature eliminates the need to remember to turn the connector to make contact with the contacts. To disengage, simply push the latch lever forward and pull the connector out. The straight cord plug uses a twist on handle, while the in-line and right angle cord plugs use a snap-in handle. The in-line connector mates with both straight and right angle cord plugs.

For those who find it more convenient, we also offer a barrel adapter which mates with either straight or right angle cord plugs.

Ordering Information

Part Number	Style	Notes
HPCP41F	Panel	Rectangle, 0.100" flange depth, 0.250" faston terms
HPCP42F	Panel	Rectangle, 0.200" flange depth, 0.250" faston terms
HPCP41F1	Panel	Rectangle, 0.100" flange depth, 0.187" faston terms
HPCP42F1	Panel	Rectangle, 0.200" flange depth, 0.187" faston terms
HPCP410PC	Panel	Rectangle, 0.100" flange depth, straight PC terms
HPCP420PC	Panel	Rectangle, 0.200" flange depth, straight PC terms
HPCP410RA	Panel	Rectangle, 0.100" flange depth, right angle PC terms
HPCP420RA	Panel	Rectangle, 0.200" flange depth, right angle PC terms
HPCPR41F	Panel	Round, 0.100" flange depth, 0.250" faston terms
HPCPR42F	Panel	Round, 0.200" flange depth, 0.250" faston terms
HPCPR41F1	Panel	Round, 0.100" flange depth, 0.187" faston terms
HPCPR42F1	Panel	Round, 0.200" flange depth, 0.187" faston terms
HPCPR410PC	Panel	Round, 0.100" flange depth, straight PC terms
HPCPR420PC	Panel	Round, 0.200" flange depth, straight PC terms

See Pages 61 and 62 for Mechanical Drawings

Speakon® is a registered trademark of Neutrik Inc.

HPC Connector Series
HPC Cord, & Adapter Style Series

Ordering Information

Part Number	Style	Notes
HPCC4F	Cord	Straight with 0.250" faston terms
HPCI4F	Cord	Inline with 0.250" faston terms
HPCC4RAF	Cord	Right angle with 0.250" faston terms

See Page 62 for Mechanical Drawings

Specifications

Mechanical
(Panel and Cord Mounts)

Shock: Per Mil-Std 202, Method 213B, Cond. K
Vibration: Mil-Std 202, Method 201A
Life: 1,000 rotational cycles
Cable Range (cord mount): 10AWG, 0.560" cable OD maximum

Electrical
(Panel and Cord Mounts)

Voltage Rating: 1,500 AC RMS, per Mil-Std 202, Method 301
Current Rating (Faston® terminals): 50A RMS w/10AWG wire, normal ambient, per UL 1977
Current Rating (PC terminals): 30A per UL 1977
Contact Resistance: 1mΩ, 1.5mΩ after 1,000 insertion/withdrawals
Insulation Resistance: > 2T Ω

Environmental
(Panel and Cord Mounts)

Salt Spray: Mil-Std 202, Method 101D, Cond. B
Thermal Shock: Mil-Std 202, Method 107G
Temperature Limits: -55˚C to +85˚ C
Moisture Resistance: Mil-Std. 202, Method 106E
Life @ Ambient Temperature: Mil-Std 202, Method 108A
Touchproof: IEC 65 and 1010-1
IP Rating: IEC 529, IP 25

Materials
(Panel and Cord Mounts)

Housings: Thermoplastic UL 94V-0 rated
Seal Rings: Thermoplastic rubber
Contacts: Silver-plated over copper alloy

5555 North Elston Avenue / Chicago, IL 60630
Phone: 773-792-2700 / Fax: 773-792-2129

CONNECTORS

EH Series Receptacles

The EH Series consist of different styles of popular connectors in our E Series housing. This allows the end user to punch one single hole size and populate wall plates, gang assemblies with different types of connectors. Connector styles include BNC feed-throughs, RCA feed-throughs, USB feed-throughs, IEEE 1394 Firewire feed-throughs, BNC to solder cup, and RCA to BNC.

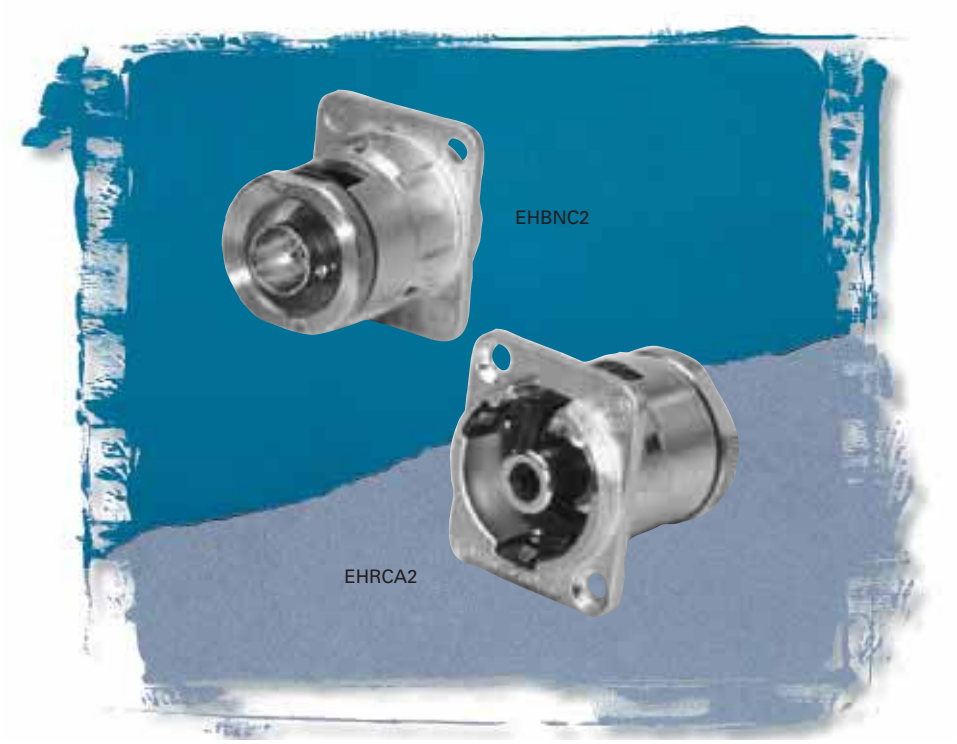

Features

- Utilizes same panel cut-out as E Series QG connectors
- Rugged metal shells
- Available with a wide variety of popular feed-through connectors

Ordering Information

Part Number	Description
EHBNC2	BNC to BNC
EHBNCSC	BNC to solder cup
EHRCA2	RCA to RCA
EHRCABNC	RCA to BNC
EHUSB2	USB to USB
EH13942	IEEE1394 to IEEE1394
EHCAT62	Cat6 to Cat6

Note: For black finish add 'B' suffix
See Page 55 for Mechanical Drawings

The 5-pin DIN connector has been adopted by the audio industry as the standard MIDI (Musical Instrument Digital Interface) connector. Switchcraft offers a wide variety of DIN and mini-DIN connectors, however, only the 5-pin DIN versions are shown in this catalog. The more popular versions used in the audio industry include straight metal, straight plastic, and right angle cord plugs, as well as metal chassis and plastic right angle PC mount versions.

The 2500 Series microphone connectors are still used in many retro-style microphones. Cable mount versions can accommodate cable OD's up to 0.281".

Specifications

Materials

Shell: Die-cast zinc alloy, nickel plated
Receptacle Mounting Flange: Steel
Receptacle Body: Plastic
Insert Material: Plastic
Socket Contacts: Tin-plated
Pin Contacts: Tin-plated
Switching Contacts: Silver-plated
Cable Relief Bushing: Soft plastic

Ordering Information

Part Number	Style	Notes
05BL5M	Cord	Male, straight, metal handle
05GM5M	Cord	Male, straight, plastic handle
05DL5M	Cord	Male, right angle, metal handle
57GB5F	Panel	Female
57PC5F	Panel	Female, right angle, PC mount
57PC5FS	Panel	Female, right angle, PC mount, shielded
2501F	Cord	Female, single contact, locking collar
2501M	Cord	Male, single contact, ext. threads
2501MP	Panel	Male, single contact, ext. threads

See Page 60 for Mechanical Drawings

5555 North Elston Avenue / Chicago, IL 60630
Phone: 773-792-2700 / Fax: 773-792-2129

HP75BNC Series

True 75 Ohm BNC Series

The HP75BNC Series is a true 75 Ohm impedance BNC connector series. All connectors meet stringent guidelines for top performance. The HP75BNC Series is available in a wide variety of cable types. All use standard crimping tools.

Features and Benefits

- True 75 Ohm impedance
- Rugged nickel-plated, machined housings
- Gold-plated center pins enhance performance

Specifications

Electrical

Contact Resistance: 75 Ohms
Voltage Rating: 500 Volts RMS
Return Loss: Less than -25 db at 3 GHz
Insulation Resistance: 5000 Megohms minimum

Mechanical

Lifecycles: 500 minimum
Center Contact Retention: 6 lbs. minimum
Coupling Mechanism: 100 lbs. minimum
Force to Engage: 2.5 lbs. maximum

Environmental

Thermal Range: -65˚C to 165˚C
Moisture Resistance: Mil Std 202
Corrosion: Mil Std 202
Flammability: UL 94-V0
Vibration: Mil Std 202
Solvent Resistance: Mil Std 202

Finish

Body/Bayonet: Nickel-plated, copper alloy
Center Conductor: 50 mi gold-plated copper alloy

See Next Page for Mechanical Drawings

Ordering Information

Part Number	Crimp Info	Cable Type
HP75BNC1	Pin .041 Hex Ferrule .255	Belden 8241, 8279, 82241 Gepco VJ59U Comm/Scope 5563
HP75BNC2	Pin .041 Hex Ferrule .324 Hex	Belden 8281, 8281B, 9141, 88281, 9231, 8141, 9118, 9248 Gepco VP618PE, VP618PVC, VP6000 Comm/Scope 7501, 7506
HP75BNC7	Pin .041 Hex Ferrule .278 Hex	Belden 1694A, 1695A, 87120, 89120, 9066, 9114, 9659 Gepco VSD2001, VSD2001TS Comm/Scope 5729 ,5765, 2227K, 2227V, 2229V, 2275V, 2276V, 2279V
HP75BNC9	Pin .041 Hex Ferrule .255 Hex	Belden 1505A, 1506A, 8212, 8241F, 9167, 9259, Gepco VPM2000, VPM2000TS, VPM2000TK Comm/Scope 2000, 5553, 5565, 5572
HP75BNC12	Pin .041 Hex Ferrule .178 Hex	Belden 1855A, 1865A Gepco VDM230, VDM250, RGB230/250 Series Comm/Scope 7537, 7538

Connector Dimension Drawings

True 75 Ohm BNC Series, EH Series

HP75BNC Series

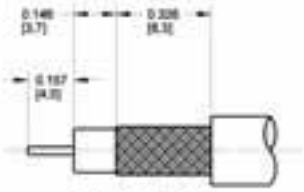

RECOMMENDED
CABLE STRIPPING DIMENSIONS

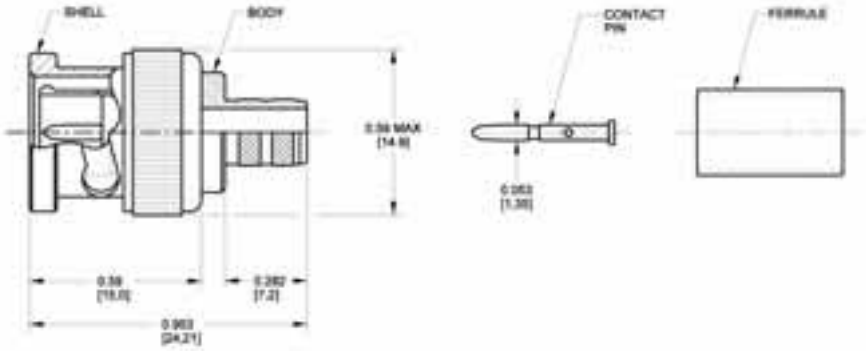

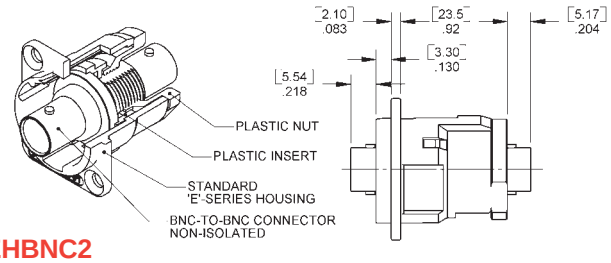

EHBNC2

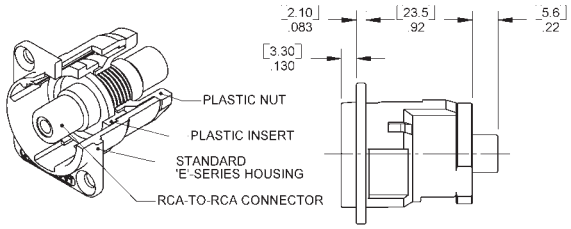

EHRCA2

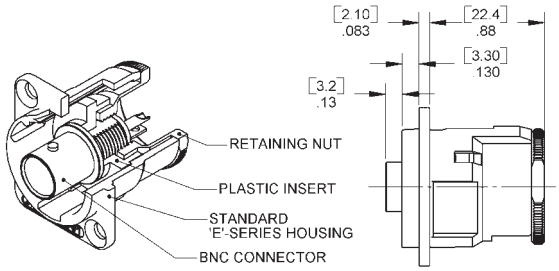

EHBNCSC

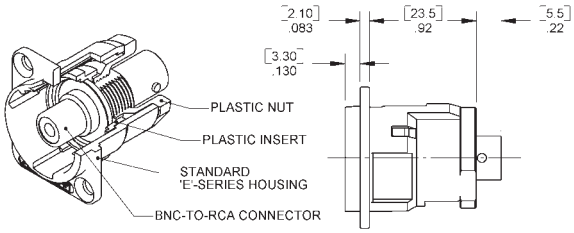

EHRCABNC

DIMENSIONS ARE FOR REFERENCE ONLY $\frac{\text{Inch}}{(\text{mm})}$

Switchcraft®
www.switchcraft.com

5555 North Elston Avenue / Chicago, IL 60630
Phone: 773-792-2700 / Fax: 773-792-2129

Connector Dimension Drawings

Q-G® Audio - A, AA, AAA Series

A*F

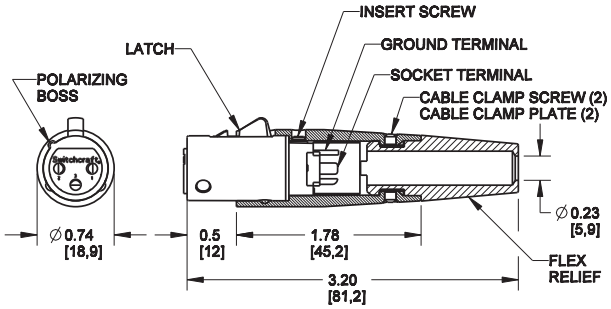

A*M

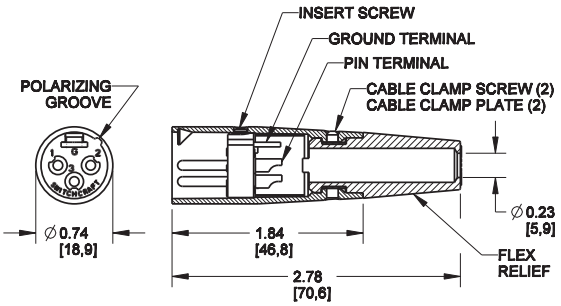

AA*F

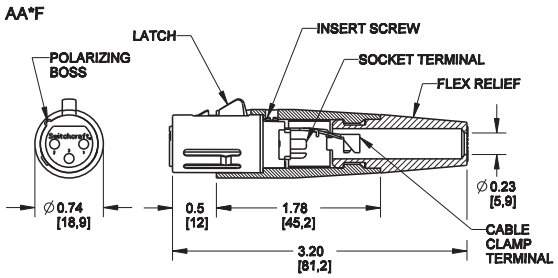

AA*M

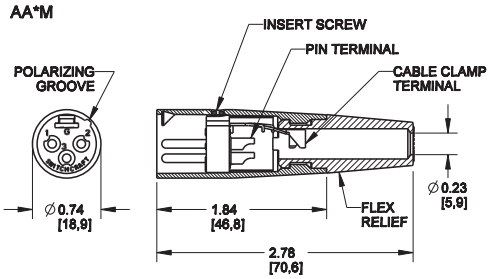

AAA*FZ

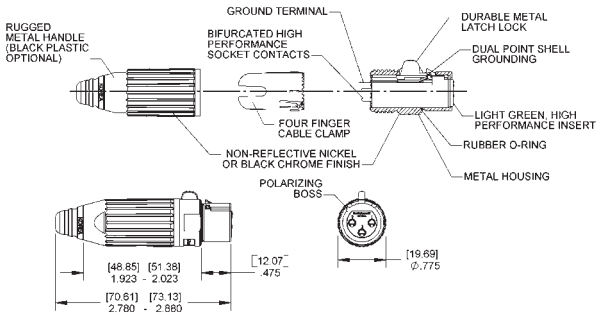

AAA*MZ

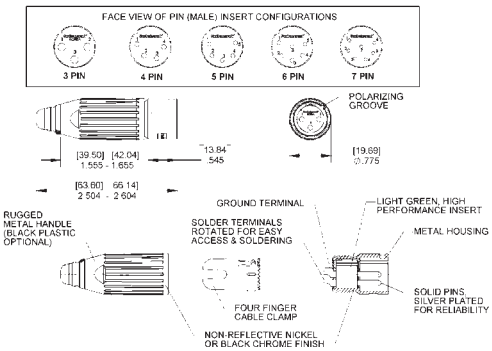

Connector Dimension Drawings

Q-G® Audio - B, C, D, E Series

B*F

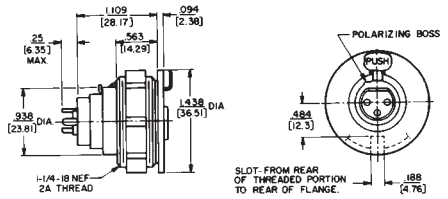

B*M

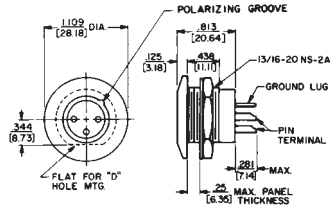

C*F

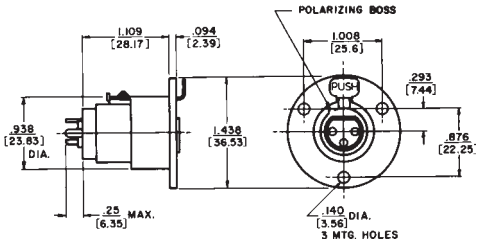

C*M

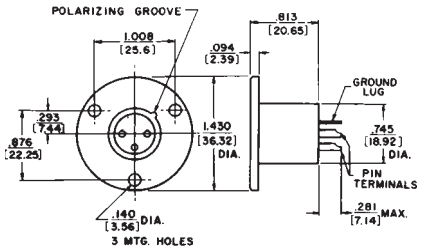

D*F

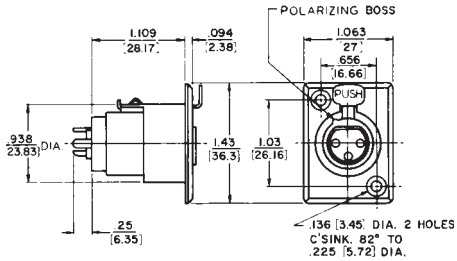

D*M

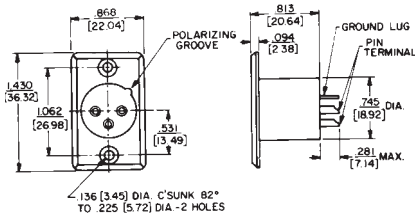

E3FSC and E3MSC

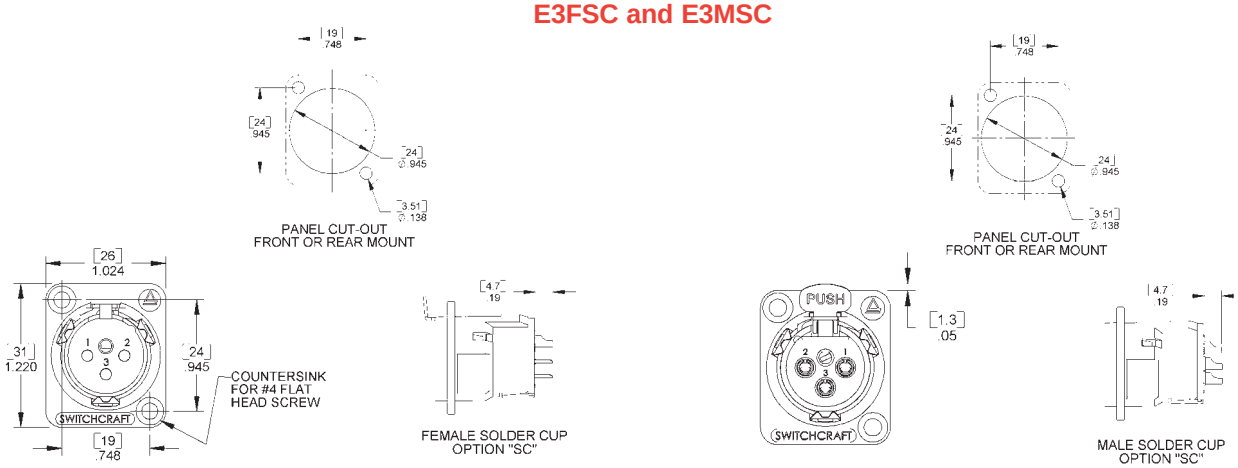

DIMENSIONS ARE FOR REFERENCE ONLY Inch (mm)

Switchcraft®
www.switchcraft.com
5555 North Elston Avenue / Chicago, IL 60630
Phone: 773-792-2700 / Fax: 773-792-2129

Connector Dimension Drawings

Q-G® Audio - J, K, P, R Series

J3FS

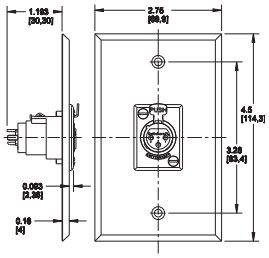

K3FS

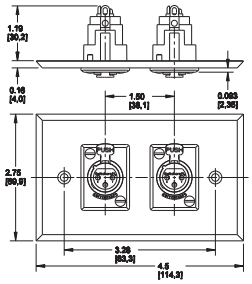

PD3FSC1AU

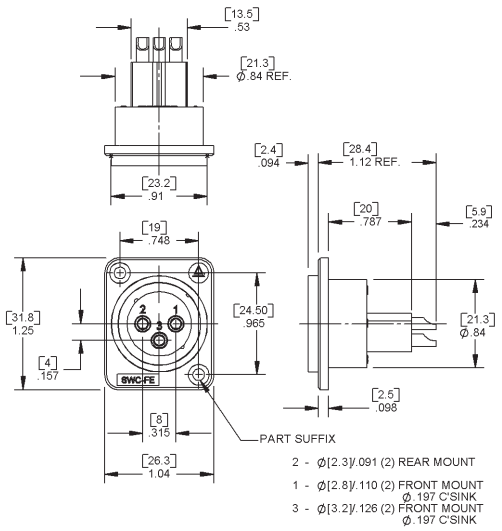

PD3MSC1AU

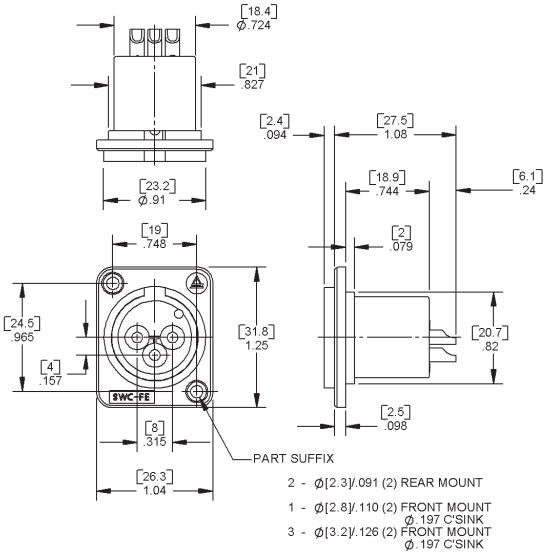

R*MZ

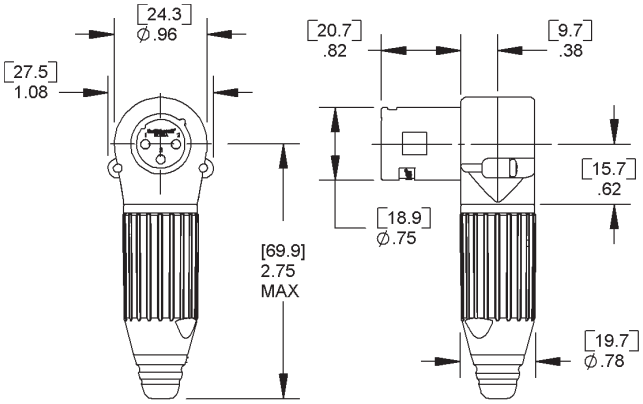

R*FZ

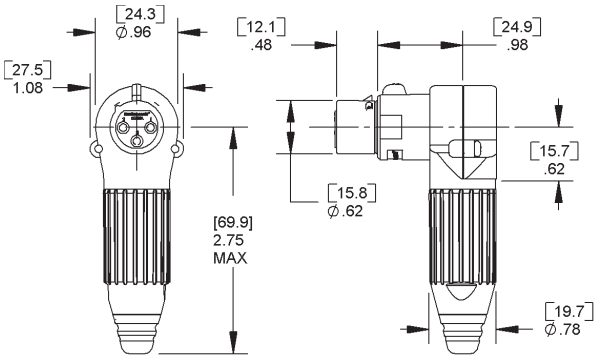

Switch

Connector Dimension Drawings

Q-G® Audio - T Series

T3F

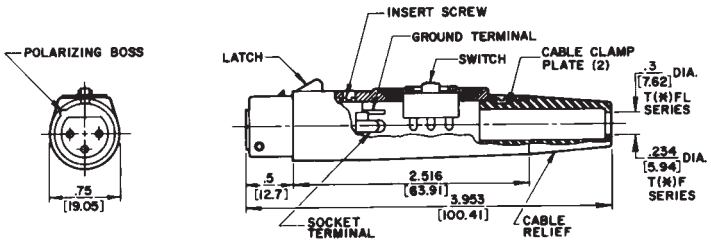

TA*M

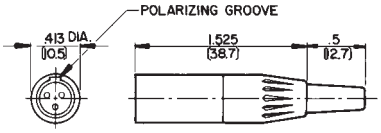

TA*F

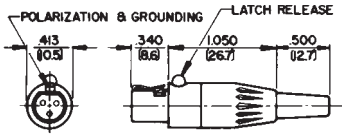

TB*M

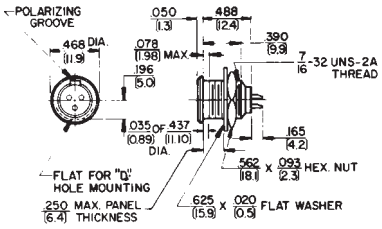

TY*F

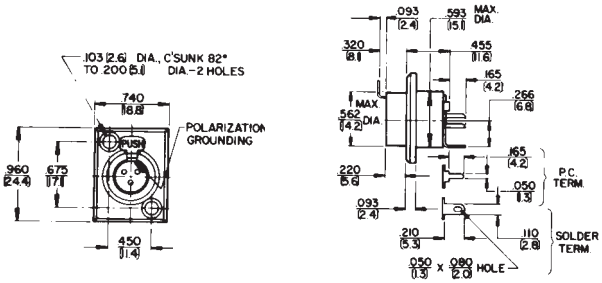

DIMENSIONS ARE FOR REFERENCE ONLY Inch (mm)

Switchcraft®
www.switchcraft.com
5555 North Elston Avenue / Chicago, IL 60630
Phone: 773-792-2700 / Fax: 773-792-2129

Connector Dimension Drawings

MIDI, Q-G® Audio - P Series

05BL5M

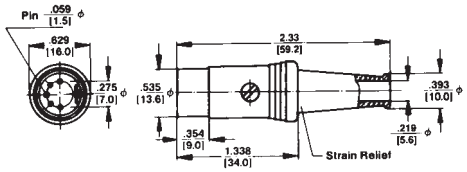

05GM5M

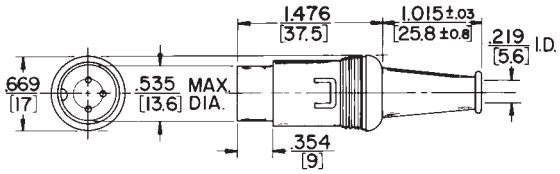

57GB5F

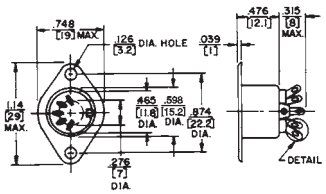

57PC5F

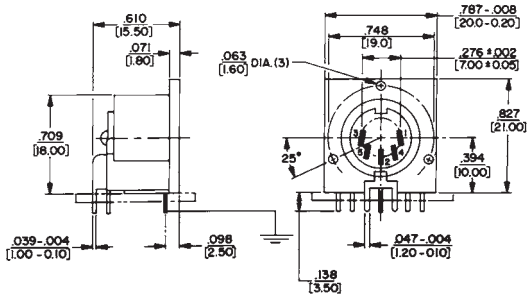

P*F

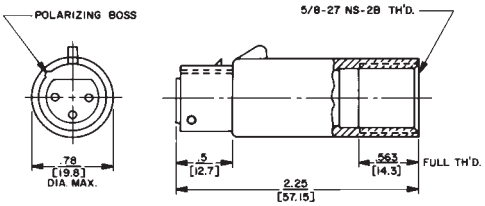

P*M

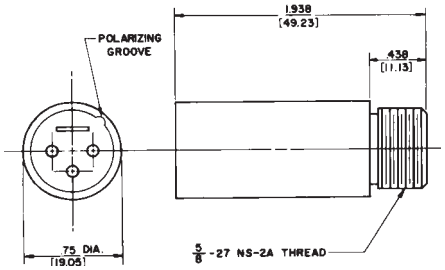

Switc

Connector Dimension Drawings

HPC Panel Style Series

HPC

FOR ALL TERMINALS SHOWN, ROUND COUNTERPARTS EXIST

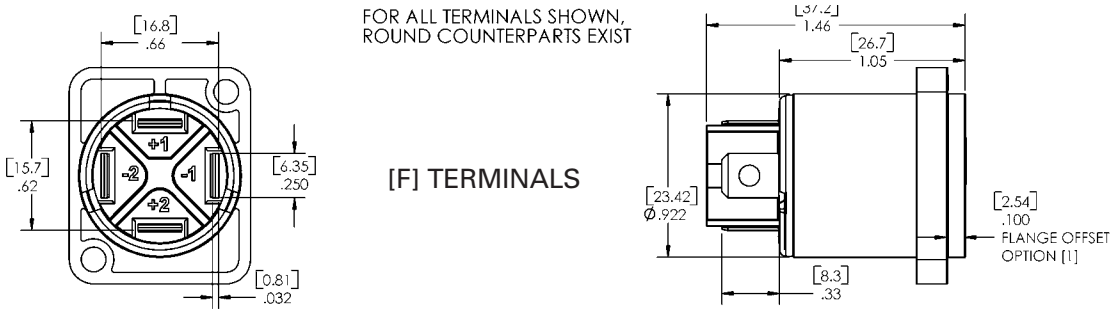

[F] TERMINALS

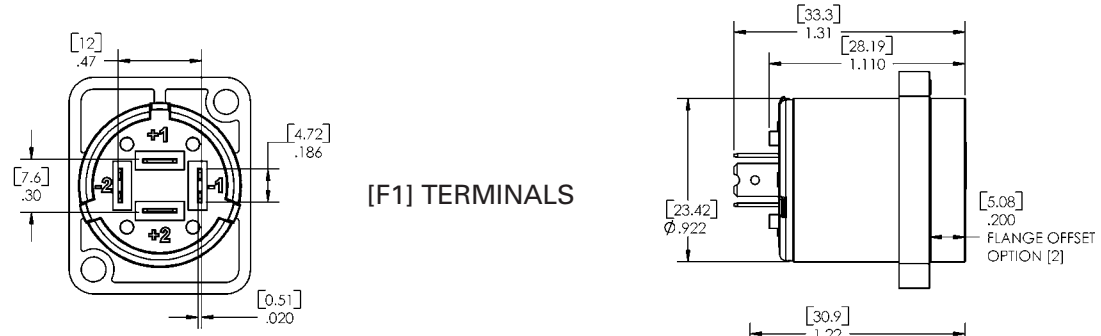

[F1] TERMINALS

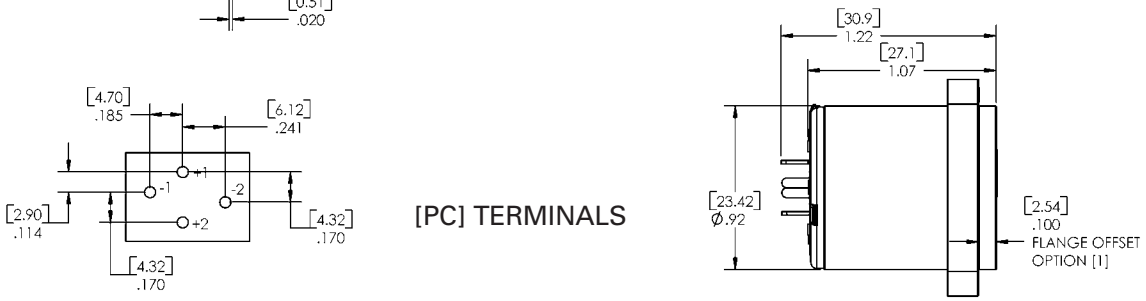

[PC] TERMINALS

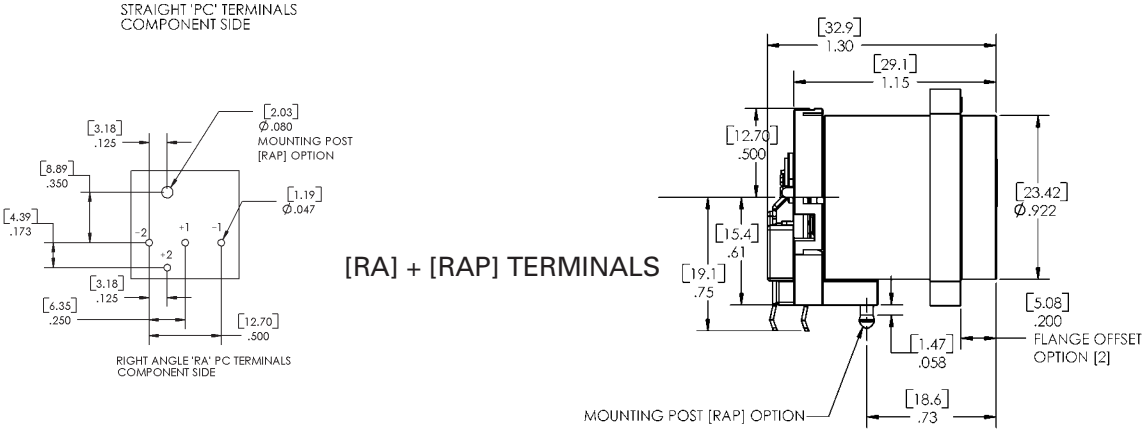

[RA] + [RAP] TERMINALS

DIMENSIONS ARE FOR REFERENCE ONLY Inch (mm)

Switchcraft®
www.switchcraft.com
5555 North Elston Avenue / Chicago, IL 60630
Phone: 773-792-2700 / Fax: 773-792-2129

Connector Dimension Drawings

HPC Panel Style Series

HPC

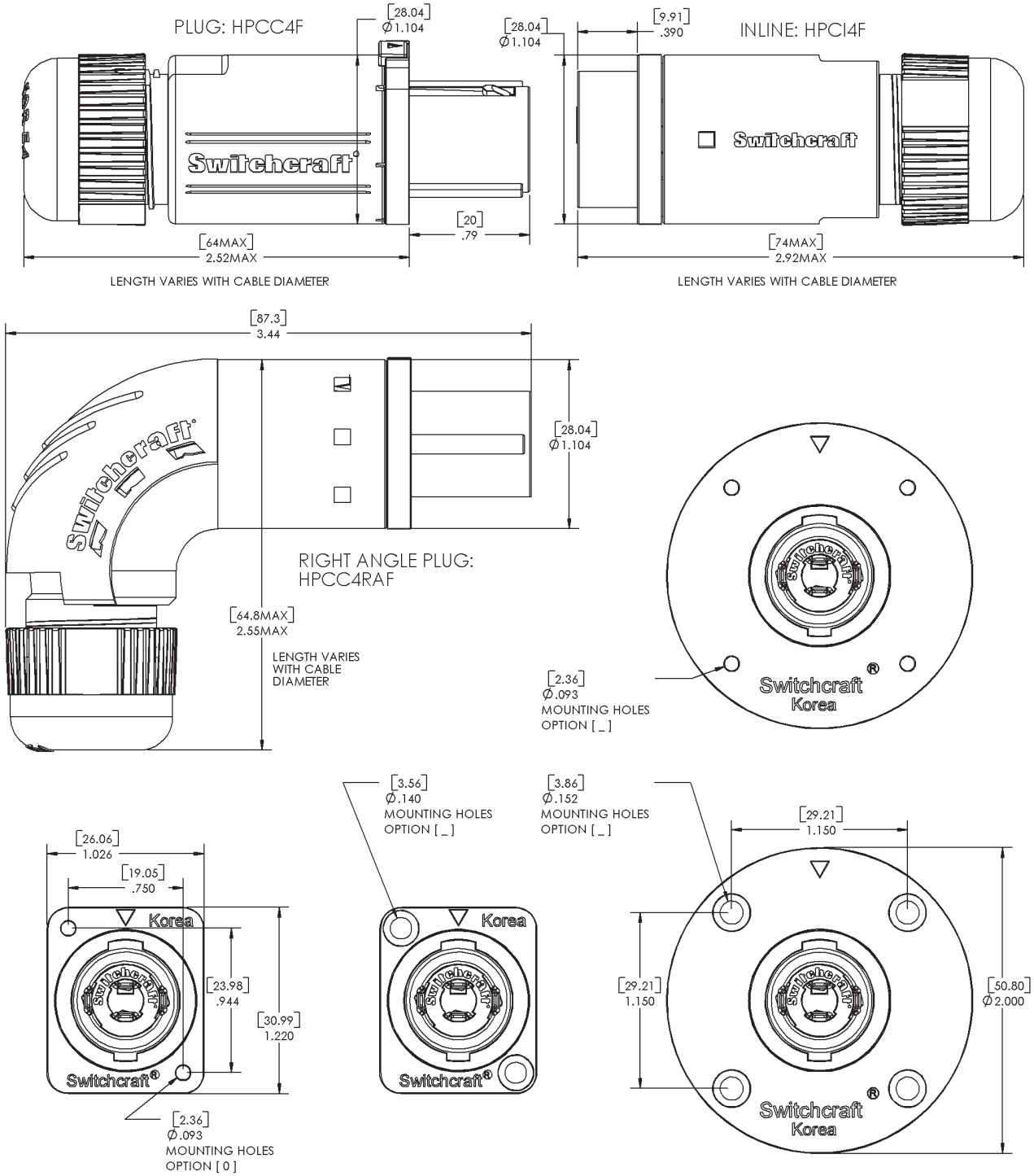

AUDIO ADAPTERS

XLR to XLR, RCA, 1/4," TQ-G Adapter Series

A wide variety of audio adapters are available from Switchcraft. Ranges include XLR to XLR, XLR to RCA, XLR to 1/4", along with a multitude of specialty adapters. Our DMX adapters allow users to adapt from 5 pin DMX controls to the more prevalent 3 pin XLR.

Ordering Information

Part Number	Description
XLR to XLR	
389	3 Pin female to 3 pin female
390	3 Pin male to 3 pin male
S3FM	3 Pin male to 3 pin female
S3F5M	3 Pin female to 5 pin male
S5F3M	5 Pin female to 3 pin male
XLR to RCA	
321	3 Pin female XLR to male RCA
322	3 Pin female XLR to female RCA
323	3 Pin male XLR to male RCA
324	3 Pin male XLR to female RCA
XLR to 1/4"	
383A	3 Pin female XLR to female 1/4", 3 cond.
384A	3 Pin male XLR to female 1/4", 3 cond.
386A	3 Pin female XLR to male 1/4", 3 cond.
387A	3 Pin male XLR to male 1/4", 3 cond.
XLR to TQ-G	
TA01	3 Pin XLR female to 3 pin TQG female
TA02	4 Pin XLR female to 4 pin TQG female
TA04	3 Pin XLR male to 3 pin TQG female
TA05	4 Pin XLR male to 4 pin TQG female

DIMENSIONS ARE FOR REFERENCE ONLY Inch (mm)

Switchcraft®
www.switchcraft.com
5555 North Elston Avenue / Chicago, IL 60630
Phone: 773-792-2700 / Fax: 773-792-2129

AUDIO ADAPTERS

1/4" to 1/4", RCA; RCA to RCA; & Miscellaneous Adapter Series

Ordering Information

Part Number	Description
1/4" to 1/4"	
361A	Mono female to female
362A	Stereo female to female
363	Mono male to male
340	2 Mono jacks parallel to mono plug
352A	Stereo jack to mono plug
1/4" to RCA	
330P	2 RCA jacks to mono plug, 4" cable
336A	Female 1/4" to male RCA
345A	Female RCA to male 1/4"
RCA to RCA	
330F1	2 Female RCA parallel to 1 male RCA
330F2	1 Male and 1 female parallel to 1 male
349A	Female to female
Miscellaneous	
332A	Old MC1M type to 1/4" female
365	Tini-Jax (.141") to RCA male
370A	Female RCA to Tini-Plug (.141")
374	1/4" female to Tini-Plug (.141")
376	Tini-Jax (.141") to Micro-Plug (.097")
377	Micro-Jax (.097") to Tini-Plug (.141")
44	Female 2500 Series to 1/4" plug

Littel Phone, Hi-D, Right Angle PC Mount 1/4", 1/4" Extension Jack Series

Switchcraft offers an extensive variety of 1/4" commercial jacks. Littel phone jacks offer open frame designs, Hi-D jacks offer an enclosed, 94V-0 rated thermoplastic housing, our RA jacks are designed for right angle PC board layouts, and our Extension jacks allow the end user to extend cable lengths. All offer a wide range of options to fit a multitude of needs. For mating plugs, look to page 83 for all of the various options.

Specifications

Mechanical

Life: 10,000 insertion/withdrawal cycles, minimum

Electrical

Contact Resistance: .030 ohms maximum (initial), .050 ohms maximum (after humidity, durability exposure) Per Mil-Std-202E
Insulation Resistance: 10,000 MW minimum (initial), 1,000 MW minimum (after humidity)
Dielectric Withstanding Voltage: 500V, 60 Hz (rms) AC
Contact Rating: 1A, 25 VDC

Environmental

Thermal Range: -55˚C to +85˚C (non-operating); -20˚C to +65˚C (operating)
Thermal Shock: Per Mil-Std-202, method 107
Humidity: Per Mil-Std-202, method 106
Salt Spray: Per Mil-Std 202, method 101

Materials

Mounting Bushing: Copper alloy, nickel-plated (RN & RA Series: Thermoplastic)
Insulation: Rigid plastic
Springs: Special copper alloy. Integral contacts are standard in the isolated switching circuits
Sleeve Terminal: Copper alloy
Hardware: Supplied with one Number P10001 copper alloy nickel-plated hex nut, and one Number S1022 steel nickel-plated washer

See next page for ordering information

5555 North Elston Avenue / Chicago, IL 60630
Phone: 773-792-2700 / Fax: 773-792-2129

Jack Series

Ordering Information

Part No.	Conductors	Typical Description	Mating Plug	Notes
Littel Phone Jacks				
11	2	single open	280	
12A	2	single closed	280	
12B	3	double open	297	
14B	3	double closed	297	
Hi-D Jacks				
111	2	single open	280	
112B	3	double open	297	
113BPC1M	3	tip closed, ring open (common to sleeve)	297 or 482NC	PC terms, accepts Littel and Mil-type plugs
114B	3	double closed	297	
114BPC	3	double closed	297	PC terms
114BPCS	3	double closed	297	Springlock PC terms
114BPC1M	3	double closed	297 or 482NC	PC terms, accepts Littel and Mil-type plugs, metric thread
Z15J	2	single open	187B	15A rated
Right Angle PC Mount 1/4" Jacks				
RA49B11	2	single open	280	
RN112APC	2	single closed	280	
RA49C14B	3	double closed	297	
1/4" Extension Jacks				
80	2	single open	280	Screw terms, black handle
88	2	single open	280	Solder terms, black handle
120	2	single open	280	Screw terms, shielded handle
121	2	single open	280	Solder terms, shielded handle
131	3	double open	297	Solder terms, shielded handle
133	3	double open	298	Solder terms, shielded handle, locking
830	3	double open	297	Screw terms, black handle
128	2	single open	280	Solder terms, shielded handle
1238	3	double open	297	Solder terms, shielded handle

See Pages 72–74 for Mechanical Drawings

Thick Panel/Guitar, Locking 1/4", Tini, Tini-Extension, Micro, 3.5mm

The TP or Thick Panel jacks are typically used in applications such as loudspeaker enclosures and solid-body guitars. Only premium materials are used in the manufacture of these jacks. Locking 1/4" jacks allow the end user to lock the mating plug, providing positive detent to the connection. Also offered is a wide range of 1/8" jacks and true 3.5mm jacks.

Specifications - Thick Panel Series & Locking Jacks

Electrical

Insulation Resistance: 2 x 106 MW at 500 VDC per Mil-Std-202, method 302 (initial)
Dielectric Withstanding Voltage: 1,000 VAC (ms)
Life: 10,000 cycles minimum

Environmental

Thermal Range: -55˚C to +85˚C (non operating); -20˚C to +65˚C (operating)
Thermal Shock: Per Mil-Std-202, method 107
Humidity: Per Mil-Std-202, method 106
Salt Spray: Per Mil-Std-202, method 101

Materials

Shell - Locking Jacks: Die-cast zinc, with satin nickel-plating; Black chrome over nickel-plating on special order
Insert and Latch: Thermoplastic, UL94V-0
Latch Release: Nickel-plated die-cast zinc
Contact Springs: Tin-plated copper alloy
Mounting Bushing - Thick Panel Jacks: Nickel-plated copper alloy with knurled flange
Insulating Spacer: Rigid plastic

(continued on next page)

5555 North Elston Avenue / Chicago, IL 60630
Phone: 773-792-2700 / Fax: 773-792-2129

Jack Series

(continued from previous page)

Insulator/Spring Mount: Thermo-plastic
Springs: Copper alloy
Terminals: Tip: Copper alloy; Ring: (Number 152B only) Copper alloy; Sleeve: Steel, tin-plated
Hardware - Thick Panel Jacks: Supplied with one, Number P10531 nickel-plated copper alloy hex nut; and one, Number P1476 nickel-plated copper alloy flat washer

Specifications - 35RAPC Series

Electrical

Contact Resistance: 20 milliohms maximum
Insulation Resistance: 100 milliohms minimum at 250 VDC
Dielectric Withstanding Voltage: 250 VAC
Life: 5,000 cycles, minimum
Insertion Force: 0.88 pounds - 3.5 pounds
Withdrawal Force: 0.88 pounds - 2.64 pounds

Materials

Coil Spring: Steel Wire
Bushing: Nickel-plated copper alloy
Terminal: Silver-plated copper alloy
Tip Spring: Silver-plated copper alloy
Shunt Terminal: Plated copper alloy
Cover: Thermoplastic, transparent UL 94V-2
Body: Thermoplastic, UL 94V-1 black color

Specifications - 35PM Series & Tini Jack Series

Electrical

Contact Resistance: .075 ohms maximum
Insulation Resistance: 5,000 MW minimum
Dielectric Withstanding Voltage: 250 VAC maximum
Life: 5,000 insertion/withdrawal cycles, minimum
Contact Rating: .25A, 48 VDC

Materials

Mounting Bushing: Nickel-plated copper alloy
Insulating Spacers: Rigid plastic
Springs: Copper alloy
Sleeve Terminal: Tin-plated copper alloy
Hardware: Supplied with one, Number P11501 nickel-plated brass locknut; and one, Number S17901 nickel-plated steel flat washer

Ordering Information

Part No.	Conductors	Description	Typical Mating Plug	Notes
Thick Panel/Guitar Jacks (1/4")				
151	2	single open	280	Nickel finish
152	3	double open	297	Brass finish
152B	3	double open	297	Nickel finish
153	2	single open	280	Gold-plated springs, electro-polish brass finish, 9/16-12 UNC wood thread
154	3	double open	297	Gold-plated, no cable clamp
155	3	double open	297	Black satin chrome finish, no cable clamp
Locking 1/4" Jacks				
E111L	2	single open	280	
E112BL	3	double open	297	
Tini-Jacks (.141")				
41	2	single open	750	
42A	2	single closed	750	
142A	2	single closed	750	
PC142A	2	single closed	750	PC terms
Tini-Extension Jacks (.141")				
125	2	single open	750	
3.5mm Jacks				
35RAPC2AV	2	single closed		Threaded bushing, PC terms
35RAPC2BH3	3	double open	35HDNN	Threaded bushing, PC terms
35RAPC3BH3	3	tip closed, ring open	35HDNN	Threaded bushing, PC terms
35RAPC4BH3	3	double closed	35HDNN	Threaded bushing, PC terms
35RAPC7J	3	top jack dual open	35HDNN	Dual vertical jack bottom jack dual closed
35RAPC7JS	3	top jack dual open	35HDNN	Dual vertical jack, shielded bottom jack dual closed
35PM1	2	single open	750	
35PM2A	2	single closed	750	

See Pages 75-79 for Mechanical Drawings

Jack Series

Phono, Phono Extension, TT or Bantam, MT 1/4" Jack Series

Phono jacks, more commonly called RCA jacks offer low cost, two conductor connections. TT or bantam jacks are the same type used in our audio patchbays. Typically used in high end studio applications. MT or 1/4" jacks are just a bigger version of the TT jacks. Same high quality, just in a larger package.

Specifications - Phono Jacks

Materials

Frame and Shell: Steel, plated
Center Terminal: Plated copper alloy (3517PC); Plated copper alloy (3514PC)
Insulator: Thermoplastic (3514PC) Ceramic and glass filled thermoplastic (3517PC)

For 3515PC Only:

Contact and Saddle: Spring type copper alloy, copper alloy pre-tinned
Shell: Steel or copper alloy, plated
Insulator Bushing: Ceramic
Insulator Spacer: Glass-filled thermoplastic

Specifications - TT and MT Jacks

Mechanical

Life: Commercial – 30,000 insertion/withdrawal cycles, minimum; Military – 30,000 insertion/withdrawal cycles, minimum
Mechanical Shock: Military – Per Mil-Std-202, method 213, Test Condition H (75g)
Vibration: Military – Per Mil-Std-202, method 213, (10-55 Hz)

Electrical

Contact Resistance: Commercial – .030 ohms maximum (initial), .050 ohms maximum (after humidity, durability, exposure); Military – .010 ohms maximum (initial), .020 ohms maximum (after life), .10 ohms maximum (after salt spray)
Insulation Resistance: Commercial – 10,000 MΩ minimum (initial), 1,000 MΩ minimum (after humidity); Military – 10,000 MΩ minimum (initial), 1,000 MΩ minimum (after humidity, durability exposure)
Dielectric Withstanding Voltage: 500V, 60 Hz (rms) AC

(continued on next page)

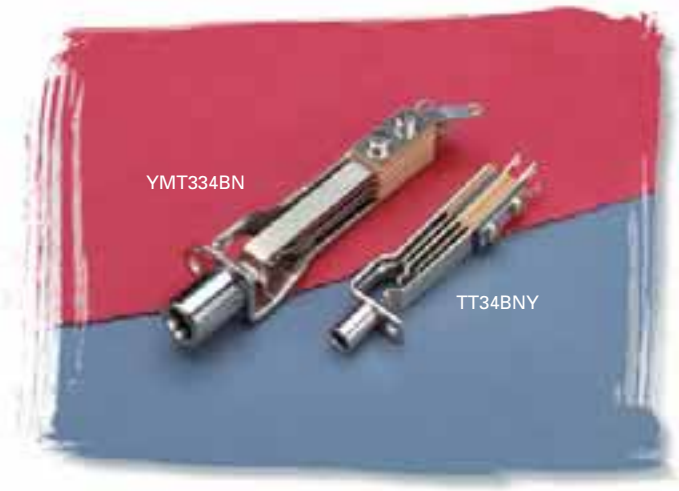

5555 North Elston Avenue / Chicago, IL 60630
Phone: 773-792-2700 / Fax: 773-792-2129

Jack Series

(continued from previous page)

Environmental

Thermal Range: Commercial — 55˚C to +85˚C (non-operating), -20˚C to +65˚C (operating); Military – -55˚C to +85˚C (non operating), -40˚C to +65˚C (operating)

Thermal Shocks: Commercial – Per Mil-Std-202, method 107; Military – Per Mil-Std-202, method 107

Humidity: Commercial – Per Mil-Std-202, method 106; Military — 0% to 95% operating and non-operating

Salt Spray: Commercial – Per Mil-Std-202, method 101; Military – Per Mil-Std-202, method 101 (48 hours)

Moisture Resistance: Military – Per Mil-Std-202, method 106 (240 hours)

Materials

Frame: Steel, nickel plated

Springs: Copper alloy

Contacts: Welded, crossbar, gold plated

Ordering Information

Part No.	Conductors	Typical Description	Mating Plug	Notes
Phono Jacks				
3501FP	2	single open	3502A	Front mounting
3501FR	2	single open	3502A	Rear mounting
3514PC	2	single open	3502A	Right angle, PC mount
3517PC	2	single open	3502A	Right angle, PC mount
BPJR**	2	single open	3502A	Rear mounting, colored insulators
BPJR**AU	2	single open	3502A	Same as above, with gold-plating
BPJF**	2	single open	3502A	Front mounting, colored insulators
BPJF**AU	2	single open	3502A	Same as above, with gold-plating
BPJJ**	2	single open	3502A	Feed through mount
BPJJ**AU	2	single open	3502A	Same as above, with gold-plating
Phone Extension Jacks				
3503	2	single open	3502A	
TT or Bantam Jacks				
TT34B	3	double closed	TT253NC	
TT34BNY	3	double closed	TT253NC	Nickel-plated frame, fanned terminals
WTT34B	3	double closed	TT253NC	Wire-wrap terminals
MT 1/4" Jacks				
MT334B	3	double closed	482NC	
WMT334B	3	double closed	482NC	Wire-wrap terminals
YMT334BN	3	double closed	482NC	Nickel-plated frame, fanned terminals

** To designate color of insulator, use: 01– Black, 02 – Red, 03 – White, 04 – Yellow, 05 - Blue, 06 - Green

See Pages 80-82 for Mechanical Drawings

Power/Jacks Plugs Series
700, S700, 800 Cord & Panel Style Series

Low power AC to DC power jacks and plugs are used throughout the audio industry, to power a wide variety of products. Switchcraft offers both cord plug and panel mount versions, including locking and non-locking versions.

Specifications - Plugs

Electrical:

Current (Carry): 5 amps

Materials

Plug Sleeve and Pin: Nickel-plated copper alloy
Lock Ring: Nickel-plated copper alloy
Lock Ring Thread Size: 5/16" - 32 UNEF 2B
Finger Insulator: Molded plastic
Insulating Washers: Rigid plastic
Sleeve Terminal: Copper alloy, electro-tinned
Handle: Molded plastic
Handle Thread Size: 5/16" - 24 UNF 2B

Specifications - Jacks

Mechanical

Life: 10,000 insertion/withdrawal cycles minimum
Insertion/Withdrawal Forces: 3 pound insertion (maximum), 4 ounce minimum withdrawal

Electrical

Contact Resistance: .01 ohms maximum (initial), .02 ohms maximum (after humidity, durability exposure), .1 ohms maximum (after salt spray)
Insulation Resistance: 10,000 MW minimum (initial), 1,000 MW minimum (after humidity, durability exposure)
Dielectric Withstanding Voltage: 500 VAC maximum
Contact Rating: 5A, 12 VDC resistive

Materials

Housing: Molded plastic
Mounting Bushing and Hex Nut: Plated copper alloy
Pin, Spring and Terminals: Plated copper alloy
Insulators: Rigid plastic
Hardware: Supplied with one Number P2439 nickel-plated brass hex nut, and one Number P2441 nickel-plated steel flat washer

Ordering Information

Part Number	Style	Notes
712A	Panel	0.100" center pin
722A	Panel	0.080" center pin
732A	Panel	0.050" center pin
760	Cord	0.100" center hole, black handle
765	Cord	0.100“ center hole, red handle
S760	Cord	0.080" center hole, black handle
S765	Cord	0.080" center hole, red handle
860	Cord	0.050" center hole, black handle
865	Cord	0.050" center hole, red handle
760K	Cord	0.100" center hole, black handle, locking
S760K	Cord	0.080" center hole, black handle, locking

See Next Page for Mechanical Drawings

5555 North Elston Avenue / Chicago, IL 60630
Phone: 773-792-2700 / Fax: 773-792-2129

Jack Series Dimension Drawings

Littel Phone, Hi-D, 1/4" Extension, 700 Panel Jack Series

11, 12A, 12B, 14B

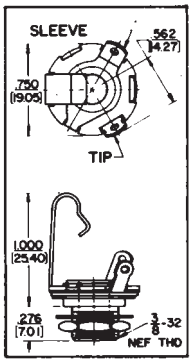

11 Series

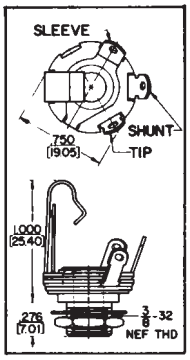

12A Series

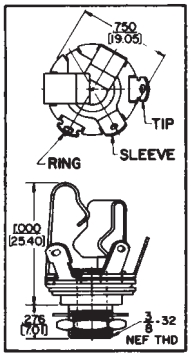

12B Series

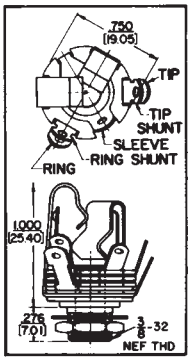

14B Series

712A

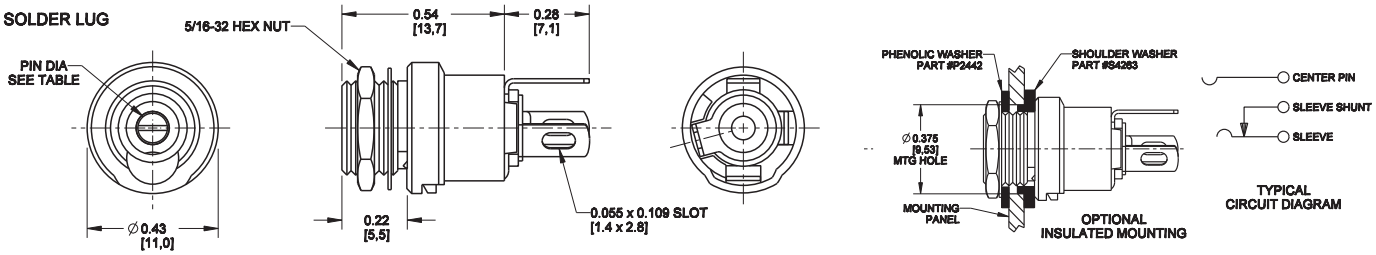

Z15J

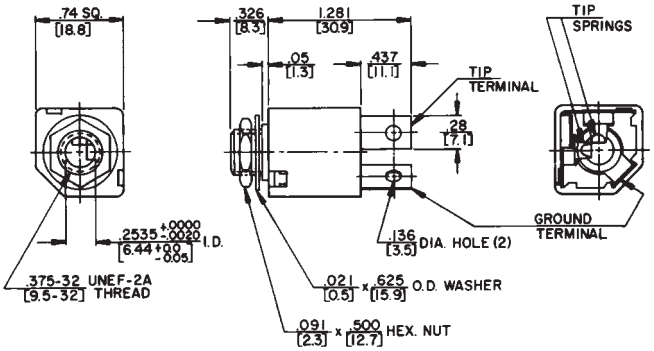

80

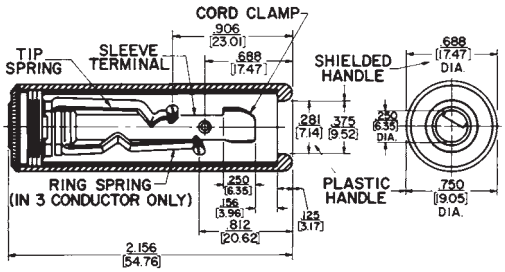

Switcl

Jack Series Dimension Drawings

Littel Phone, Hi-D, 1/4" Extension Jack Series

Solder Lug Terminals for Hi-D Jax - 111, 112B, 114B

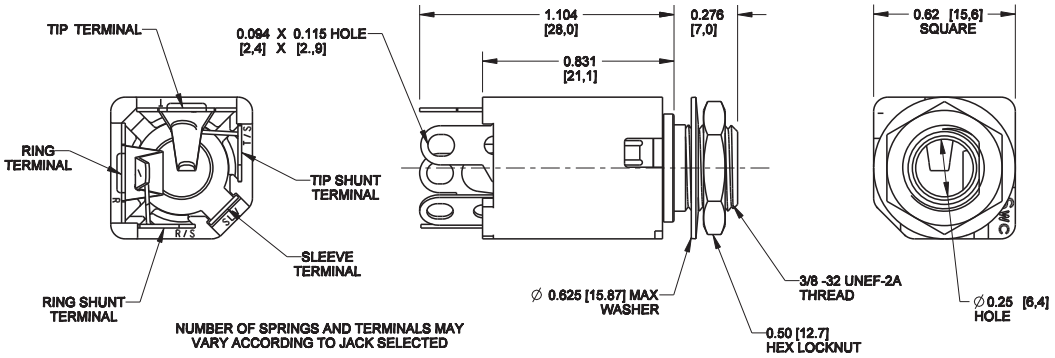

Spring Lock PC Terminals for Hi-D Jax - 114BPCS

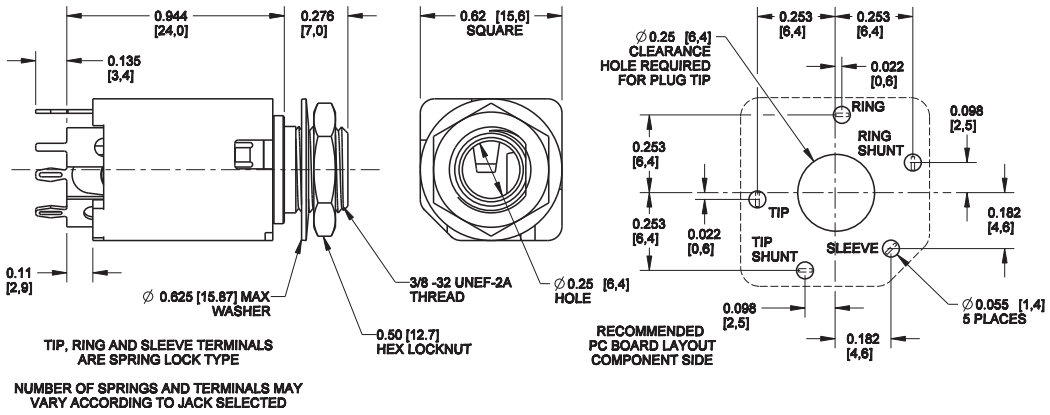

PC Terminals for Hi-D Jax - 113BPC1M, 114BPC1M

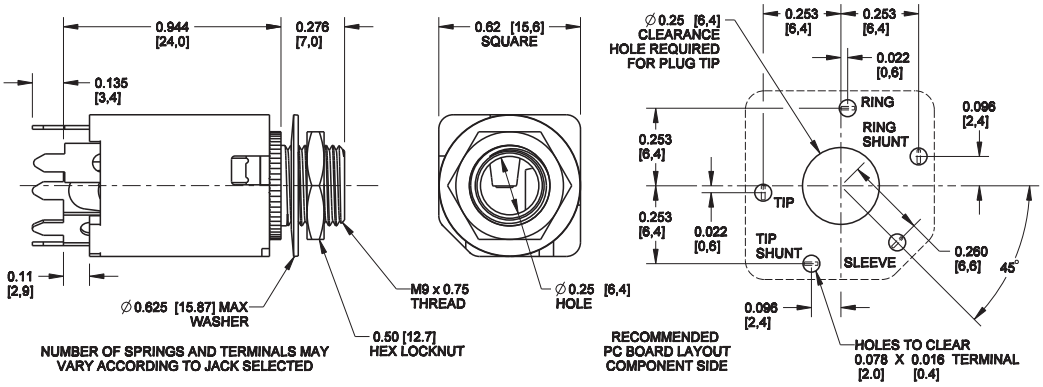

DIMENSIONS ARE FOR REFERENCE ONLY Inch / (mm)

Switchcraft®
www.switchcraft.com
5555 North Elston Avenue / Chicago, IL 60630
Phone: 773-792-2700 / Fax: 773-792-2129

Jack Series Dimension Drawings

Right Angle PC Mount 1/4" Jack Series

RA49B11

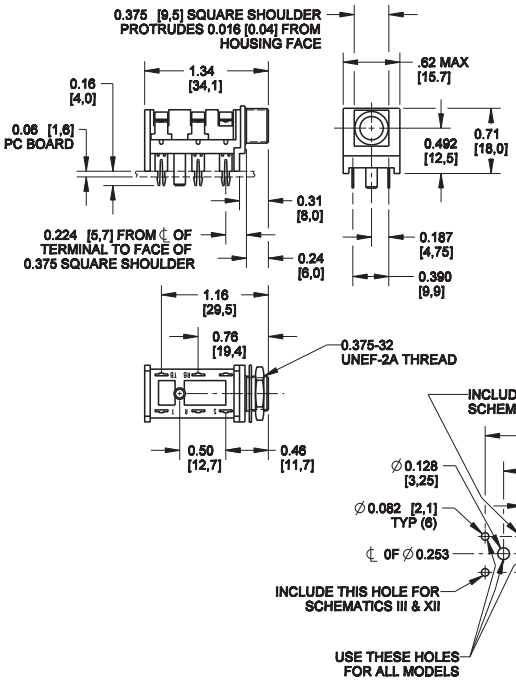

RA49C14B

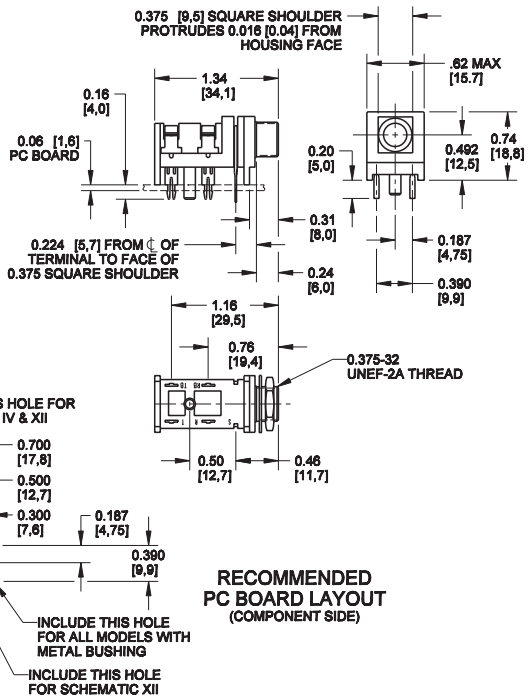

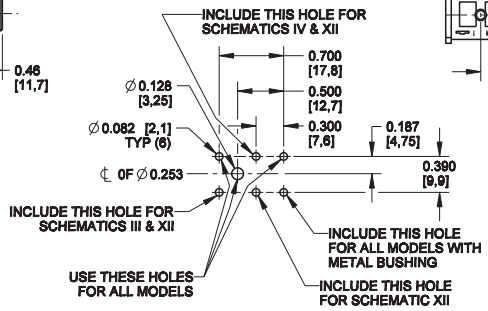

RECOMMENDED PC BOARD LAYOUT (COMPONENT SIDE)

RN112APC

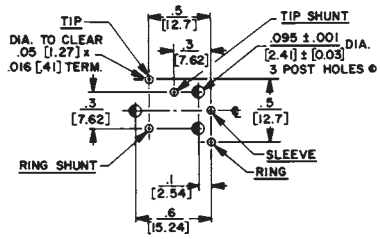

RECOMMENDED PC BOARD LAYOUT (Component Side)

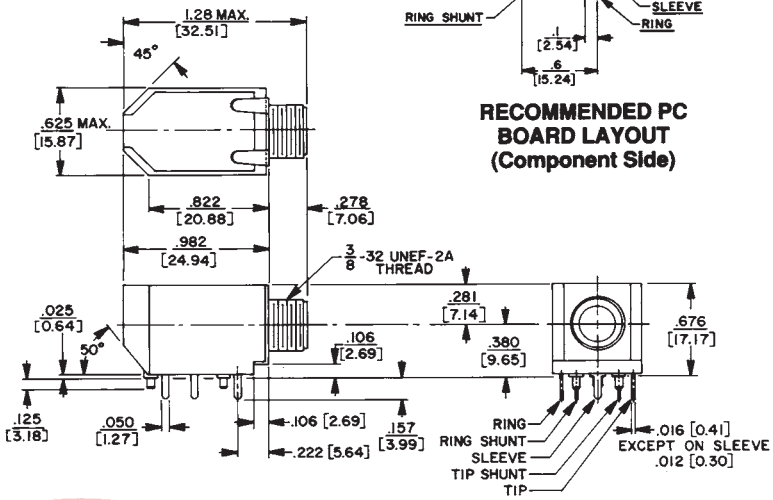

Switc

Jack Series Dimension Drawings

Thick Panel/Guitar, Locking 1/4", Tini, Tini Extension Jack Series

151, 153

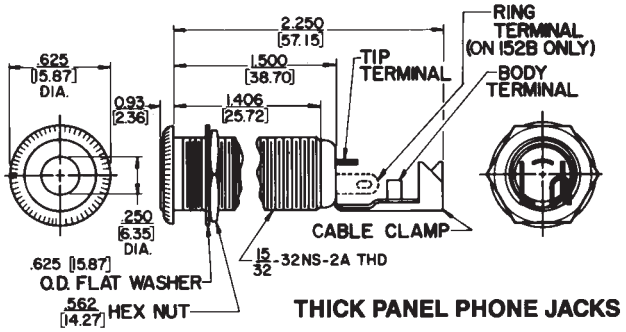

THICK PANEL PHONE JACKS

E111L, E112BL

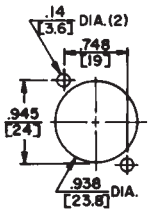

RECOMMENDED PANEL CUTOUT

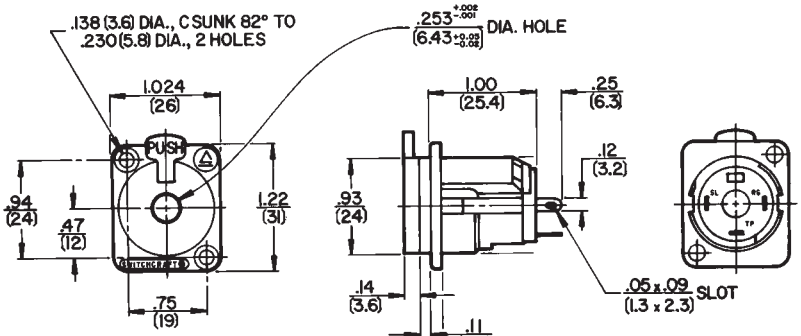

LOCKING PHONE JACKS, SERIES E

41, 42A

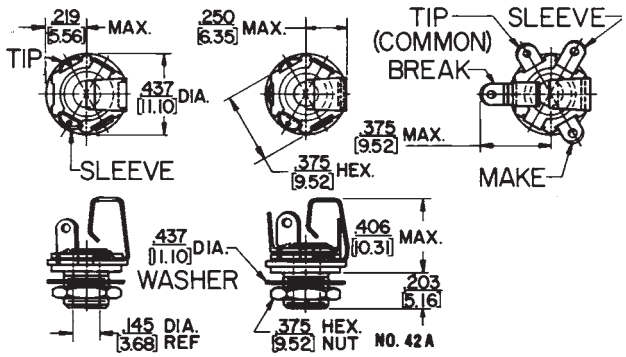

125

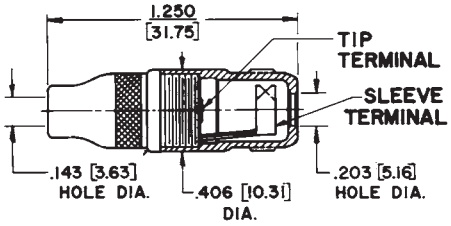

TINI-EXTENSION JAX JACK

DIMENSIONS ARE FOR REFERENCE ONLY Inch (mm)

Switchcraft®
www.switchcraft.com
5555 North Elston Avenue / Chicago, IL 60630
Phone: 773-792-2700 / Fax: 773-792-2129

Jack Series Dimension Drawings

Micro, 3.5mm Jack Series

142, PC142A

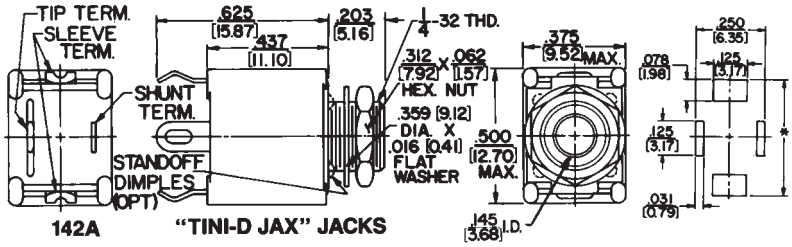

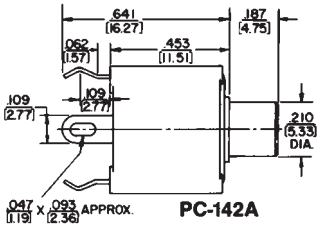

*.406 [10.31] FOR .062 [1.57] THK. BOARD
*.422 [10.72] FOR .078 [1.98] THK. BOARD
*.437 [11.10] FOR .093 [2.36] THK. BOARD

RECOMMENDED PC BOARD LAYOUTS

35RAPC2AV

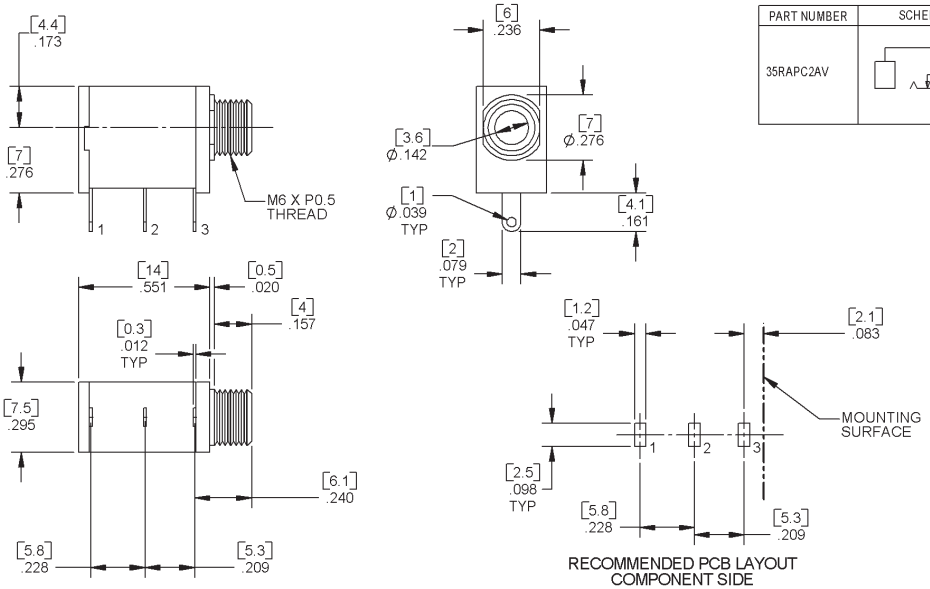

PART NUMBER	SCHEMATIC
35RAPC2AV	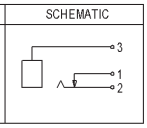

Switc

* Please visit the product pages on our website for the most up-to-date product information

35RAPC2BH3, 35RAPC3BH3, 35RAPC4BH3

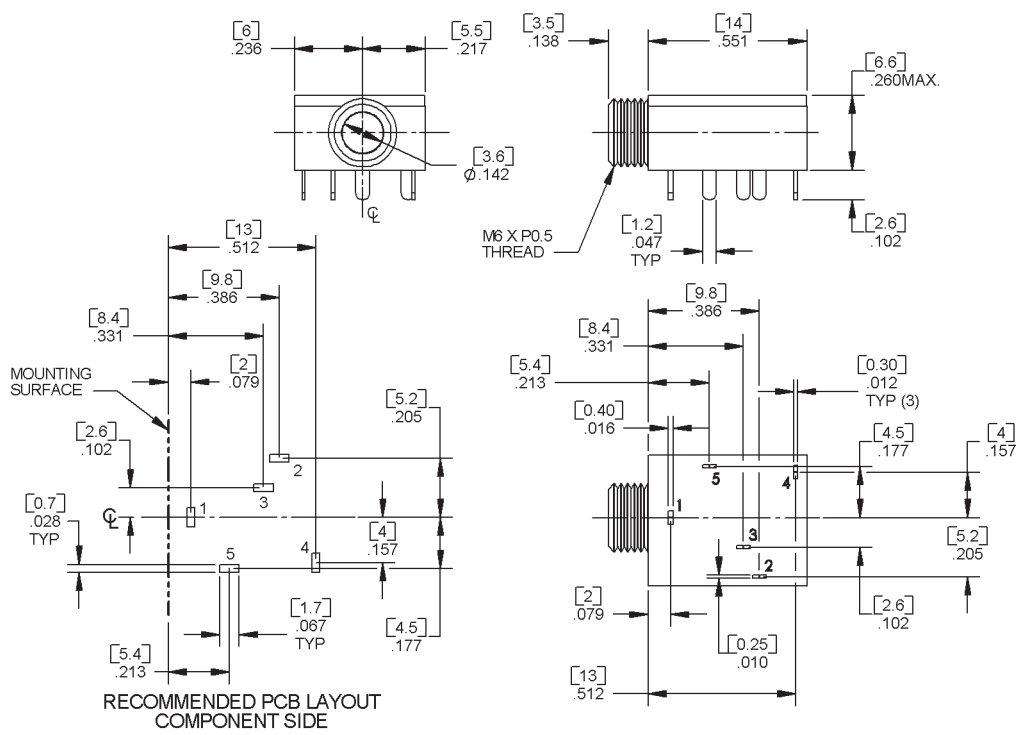

PART NUMBER	SCHEMATIC
35RAPC3BH3	1 2 4 5
35RAPC4BH3	1 2 3 4 5
35RAPC2BH3	1 2 5
35RAPC2AH3	1 4 5

DIMENSIONS ARE FOR REFERENCE ONLY Inch (mm)

Switchcraft®
www.switchcraft.com
5555 North Elston Avenue / Chicago, IL 60630
Phone: 773-792-2700 / Fax: 773-792-2129

Jack Series Dimension Drawings

3.5mm Jack Series

35RAPC7J, 35RAPC7JS

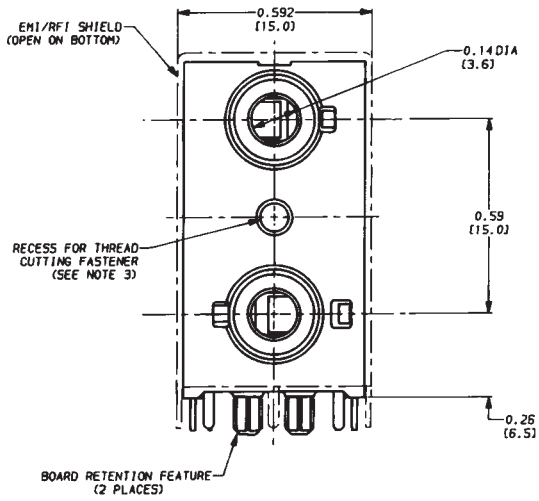

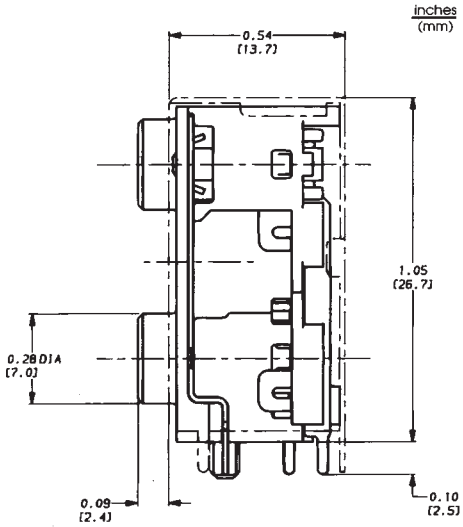

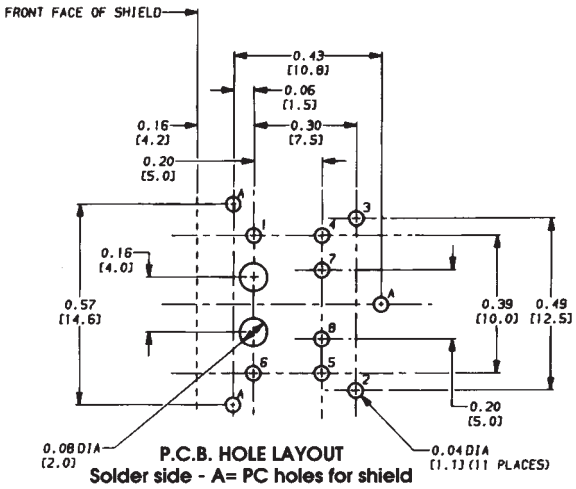

P.C.B. HOLE LAYOUT
Solder side - A= PC holes for shield

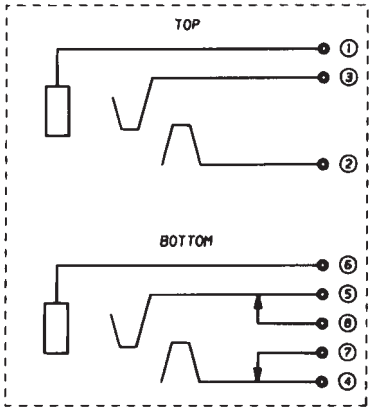

SCHEMATIC

Switc

Jack Series Dimension Drawings

3.5mm Jack Series

35PM1

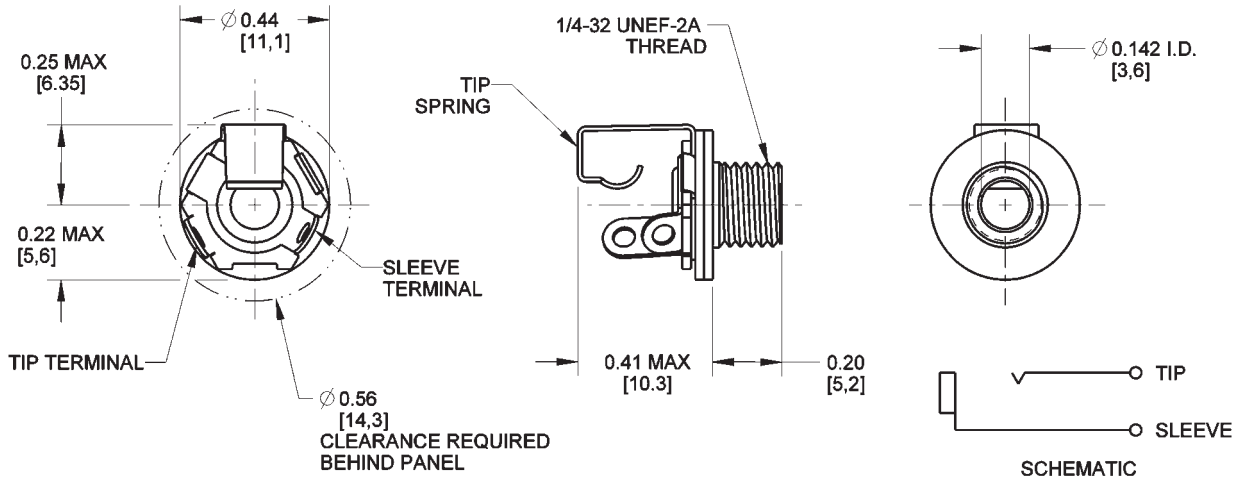

35PM2A

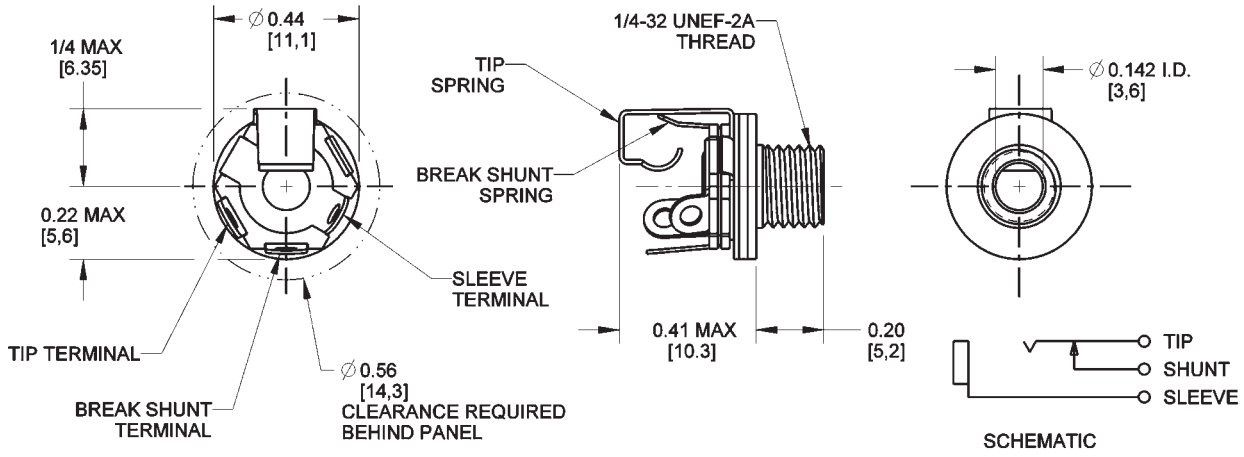

DIMENSIONS ARE FOR REFERENCE ONLY Inch (mm)

Switchcraft®
www.switchcraft.com
5555 North Elston Avenue / Chicago, IL 60630
Phone: 773-792-2700 / Fax: 773-792-2129

Jack Series Dimension Drawings

Phono and Phono Extension Jack Series

3501FP

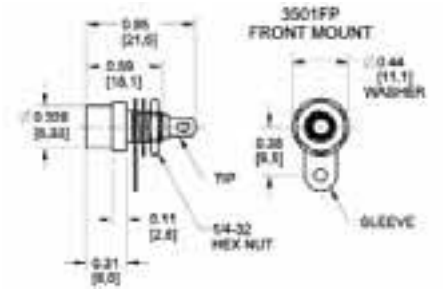

BPJJ Series

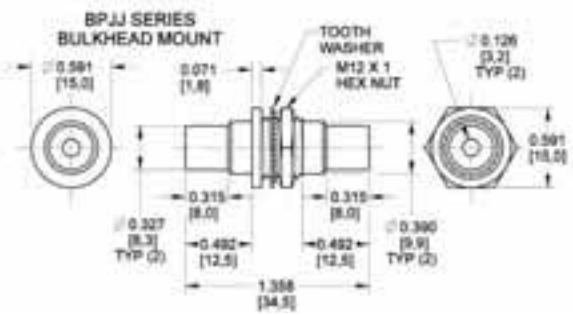

3501FR

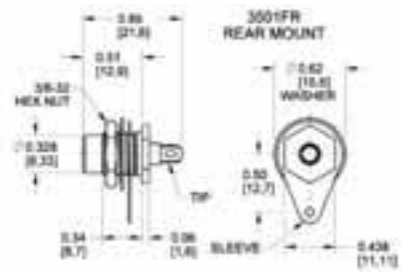

BPJF Series

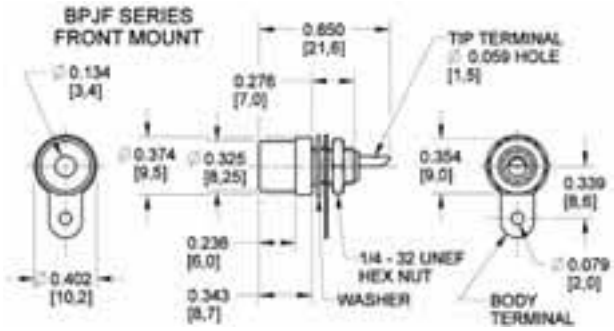

3503 Extension

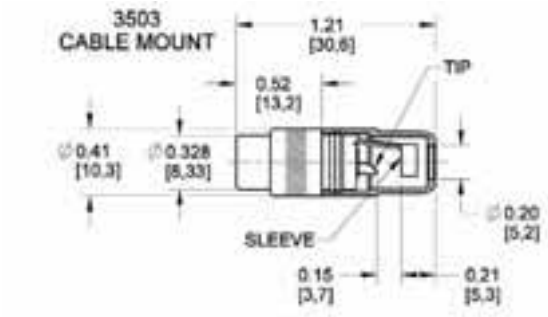

BPJR Series

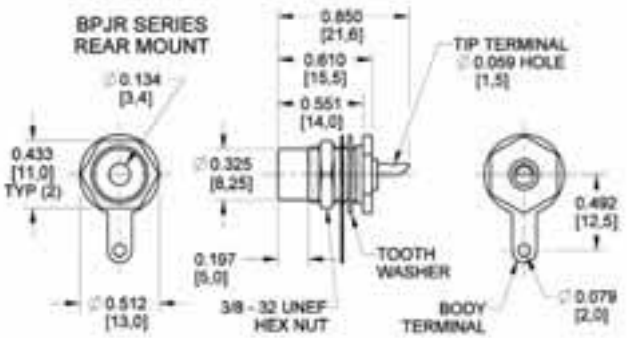

3514PC, 3517PC

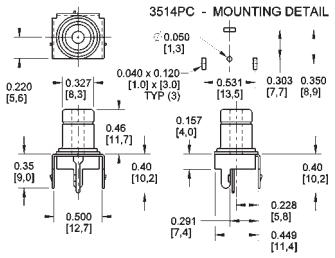

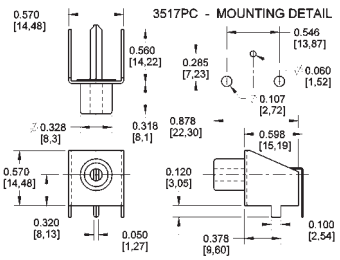

Switc

Jack Series Dimension Drawings

TT or Bantam Jack Series

TT34B, TT34BN, WTT34B

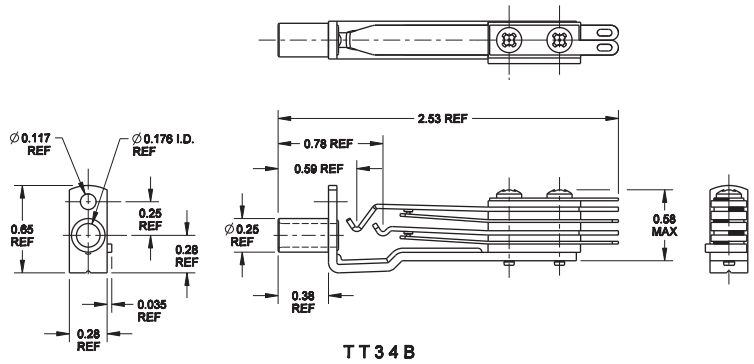

TT34B

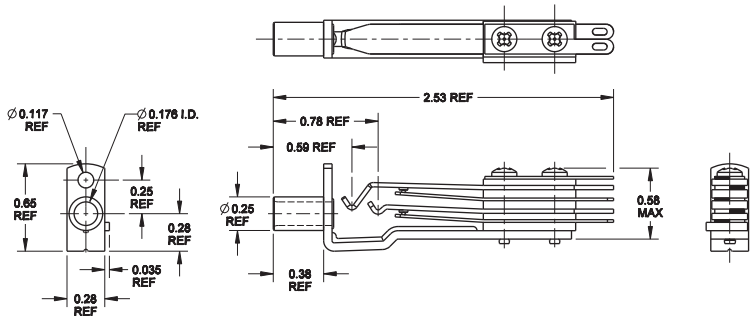

TT34BN

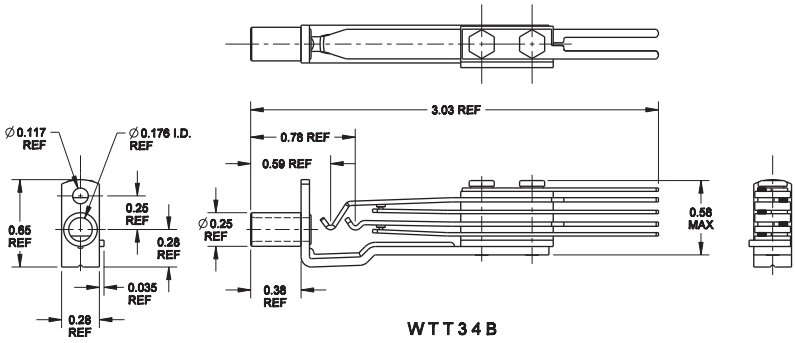

WTT34B

DIMENSIONS ARE FOR REFERENCE ONLY Inch (mm)

Switchcraft®
www.switchcraft.com
5555 North Elston Avenue / Chicago, IL 60630
Phone: 773-792-2700 / Fax: 773-792-2129

Jack Series Dimension Drawings

MT 1/4" Jack Series

MT334B, WMT334B, YMT334BN

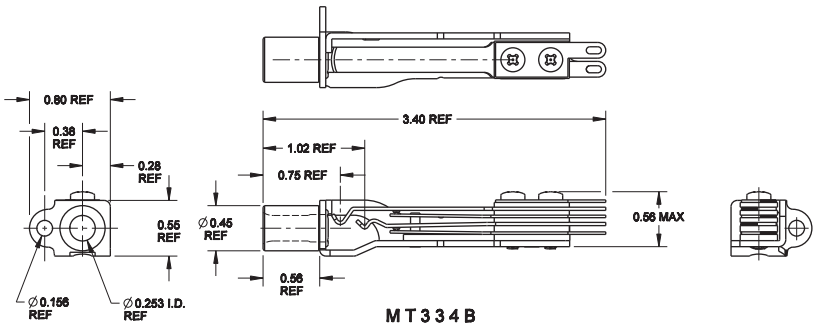

MT334B

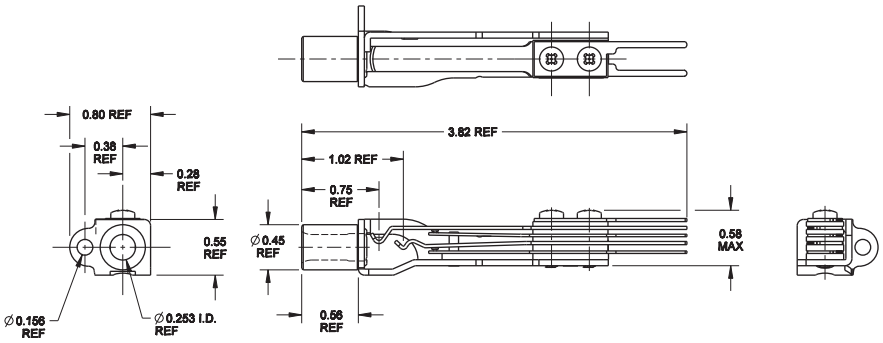

WMT334BN

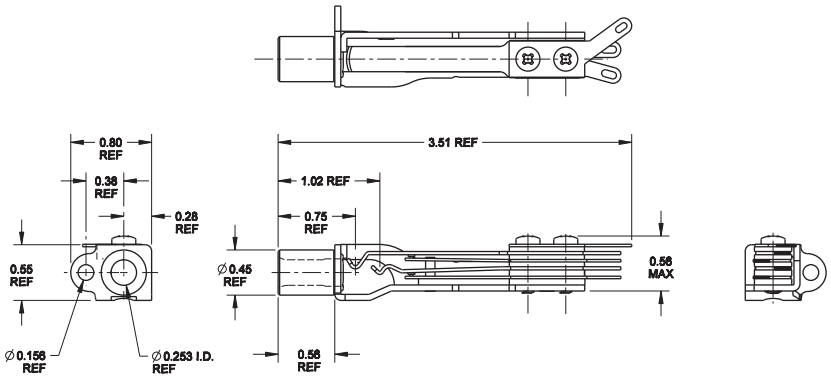

YMT334BN

Switc

Littel 1/4", Right Angle 1/4", Silent, Super Heavy Duty Plug Series

Switchcraft Littel Plugs all feature one-piece tip rods for added strength and durability. All are offered in a wide variety of configurations, including straight, right angle, shielded, screw or solder terminals. The Heavy Duty Speaker plugs have larger cable clamps and are rated at 15A. The Silent plugs have a unique circuit-closing device which stops hums, pops, and squeals when the plug is removed or inserted from the jack. Miti plugs feature heavy duty brass construction, rugged cable clamps, and spring flex reliefs. All plugs meet EIA standards for tip configuration, which ensures you they mate properly with the jack.

Specifications

Electrical

- Contact Resistance (typical Depends on Mating Jack): < 0.020 ohms
- Dielectric Withstand Voltage: 500 VAC (minimum)
- Insulation Resistance @ 500 VDC: 2,000 megohms (minimum)
- Insulation Resistance (after Mil-Std-202 Salt Spray): 1,000 megohms (minimum)
- Working Voltage: 250 VAC, 140 VDC
- Insert/Withdrawal Force: Depends on Mating Jack
- Soldering Requirement: ANSI/J-Std-001
- Temperature Range: -40˚C to +85˚C
- U.L. Component Recognition File No: E118169
- Life: Depends on Mating Jack

Materials

- Tip: Nickel-plated copper alloy
- Sleeve: Nickel-plated copper alloy
- Handle: Nickel-plated copper alloy
- Tip Terminal: Copper alloy, electrotin-plated
- Cable Clamp: Copper alloy, electro-tinplated

See Next Page for Ordering Information

DIMENSIONS ARE FOR REFERENCE ONLY Inch (mm)

5555 North Elston Avenue / Chicago, IL 60630
Phone: 773-792-2700 / Fax: 773-792-2129

Plug Series

Ordering Information

Part No.	Typical Conductors	Terminals	Mating Jack	Handle	Notes
1/4"" Littel Plug Series					
240	2	Screw	11	Black	
245	2	Screw	11	Red	
250	2	Solder	11	Black	
260	2	Screw	11	Black	
270	2	Screw	11	Black	
280	2	Solder	11	Shielded	
281	2	Solder	11	Shielded	Unassembled
580	2	Solder	11	Shielded	Diecast handle
285	2	Solder	11	Shielded	Unassembled
285L	2	Solder	11	Shielded	Larger cable clamp
267	3	Solder	12B	Black	
290	3	Screw	12B	Shielded	
297	3	Solder	12B	Shielded	
299	3	Solder	12B	Shielded	Diecast handle
Heavy Duty Speaker Plugs					
184	2	Solder	11 or Z15J	Shielded	Accepts Cable OD up to .375"
188	2	Solder	11 or Z15J	Shielded	Accepts Cable OD up to .450"
187	2	Solder	11 or Z15J	Shielded	Accepts Cable OD up to .330"
187B	2	Solder	11 or Z15J	Shielded	Black Handle, accepts Cable OD up to .330"
Right Angle 1/4" Plugs					
226	2	Solder	11	Shielded	
228	2	Solder	11	Shielded	Flat handle
236	3	Solder	12B	Shielded	
238	3	Solder	12B		Flat handle
Silent Plug					
172	2	Screw	11	Shielded	
181	2	Solder	11	Shielded	
Miti Plugs					
174S	2	Solder	11 or Z15J	Shielded	Brass finish, spring flex relief

See Pages 88-89 for Mechanical Drawings

Tini, Micro, 3.5mm Stereo, Right Angle 3.5mm Stereo, Phono, Right Angle Phono Plugs Series

Switchcraft offers a wide variety of Tini, Micro, 3.5mm, and RCA or Phono plugs. Tini plugs are 2 conductor plugs with plug finger diameters of .141" or 3.57mm. Micro plugs are 2 conductor plugs with plug finger diameters of .097" or 2.47mm. Our 35HD Series are true 3.5mm plugs, available in both straight and right angle versions; and available only in 3 conductor. The RCA or Phono plugs come with either hollow pins or solid pins. The 3502 offers hollow pins and standard size handle, the 3502L offers the same pin, but with a larger handle, accommodating cables up to .290". The 3502A and 3502RA Series offer solid pins and the larger cable clamps and handles. The 3558 Series offers a low cost alternative, with hollow pins and plastic handles.

Specifications

Mechanical

Life rating: 5,000 insertion/withdrawals
Insertion/Withdrawal Force: 1 lb (depending on mating jack)

Electrical

Insulation Resistance: > 100 megohms
Dielectric Withstanding Voltage: 250 VAC

Environmental

Thermal Range: -55˚C to +85˚C (non operating); -20˚C to 65˚C (operating)
Thermal Shock: Mil-Std 202, method 107
Humidity: Mil-Std 202, method 106
Salt Spray: Mil-Std 202, method 101

(continued on next page)

5555 North Elston Avenue / Chicago, IL 60630
Phone: 773-792-2700 / Fax: 773-792-2129

Plug Series

Materials

Tip, Rod and Body (also integral coupling collar on lock micro-plug): Nickel-plated copper alloy
Insulation: Molded thermoplastic
Sleeve Termination and Cable Clamp: Tinned copper alloy
Handle: Nickel-plated copper alloy, or anodized aluminum, or thermoplastic. See factory for details.

Ordering Information

Part No.	Conductors	Terminals	Typical Mating Jack	Handle	Notes
Tini-Plug (.141")					
740	2	Screw	41	Black	
750	2	Solder	41	Black	
755	2	Solder	41	Red	
780	2	Solder	41	Shielded	
Micro-Plugs (.097")					
850	2	Solder	TR2A	Black	
855	2	Solder	TR2A	Red	
851	2	Solder	TR2A	Black	Locking version
880	2	Solder	TR2A	Shielded	
881	2	Solder	TR2A	Shielded	Locking version
3.5mm Stereo Plugs					
35HDNN	3	Solder		Shielded	
35HDBAU	3	Solder		Black Shielded	Gold-plated finger
35HDNAU	3	Solder		Shielded	Gold-plated finger
3.5mm Right Angle Stereo Plugs					
35HDRANN	3	Solder		Shielded	
35HDRABAU	3	Solder		Black Shielded	Gold-plated finger
35HDRAAU	3	Solder		Shielded	Gold-plated finger
Phono Plugs					
3502	2	Solder	3501FP	Shielded	Hollow Pin
3502A	2	Solder	3501FP	Shielded	Large cable clamp, solid pin
3502AAU	2	Solder	3501FP	Shielded	Gold-plated finger
3502ABAU	2	Solder	3501FP	Black shielded	Gold-plated finger
3502L	2	Solder	3501FP	Shielded	Hollow pin, large cable clamp
35581	2	Solder	3501FP	Red	Plastic handle
35582	3	Solder	3501FP	Black	Plastic handle
35585	3	Solder	3501FP	White	Plastic handle
Right Angle Phono Plugs					
3502RA	2	Solder	3501FP	Shielded	
3502RABAU	2	Solder	3501FP	Black Shielded	Gold-plated finger
3502RAAU	2	Solder	3501FP	Shielded	Gold-plated finger

See Pages 90-92 for Mechanical Drawings

TT or Bantam, Mil-Style 1/4" Plugs Series

Switchcraft leads the industry when developing innovative TT and MT Style plugs. Our "N" version plugs offer nickel-plated plug fingers to reduce tarnishing and corrosion. Our "NC" version plugs not only offer nickel-plated plug fingers, but also large, easy to use solder cups and terminals, plus easy to use cable clamps that really secure your cable to the plugs.

Specifications

Materials

Tip Rod, Body and Screws: Copper alloy, natural finish
Terminals (NC Version): Tinned copper alloy
Insulation: Thermoplastic, per Mil-P-22985, Type II, Class 1
Handles: Thermoplastic, Type 6, per Mil-M-20693, Type II
Shielded (NC Version): Machined from copper alloy, nickel-plated

See Page 93 for Mechanical Drawings

Ordering Information

Part No.	Conductors	Terminals	Handle	Notes
TT or Bantam Plugs				
TT253	3	Screw	Black	
TT253N	3	Screw	Black	Nickel-plated finger
TT253NC	3	Solder	Black	Nickel-plated finger
TT254	3	Screw	Red	
TT254N	3	Screw	Red	Nickel-plated finger
TT254NC	3	Solder	Red	Nickel-plated finger
Mil-Style 1/4 Plugs				
480	3	Screw	Black	0.206" OD
482	3	Screw	Red	
482N	3	Screw	Red	Nickel-plated finger
482NC	3	Solder	Red Shielded	Nickel-plated finger
482NCP	3	Solder	Red	Nickel-plated finger
483	3	Screw	Black	
483N	3	Screw	Black	Nickel-plated finger
483NC	3	Screw	Black Shielded	Nickel-plated finger
483NCP	3	Solder	Black	Nickel-plated finger
484	3	Screw	Red	0.206" OD
485NC	3	Solder	Shielded	Nickel-plated finger

5555 North Elston Avenue / Chicago, IL 60630
Phone: 773-792-2700 / Fax: 773-792-2129

* Please visit the product pages on our website for the most up-to-date product information

Plug Series Dimension Drawings

Littel Plug 1/4" Series

260

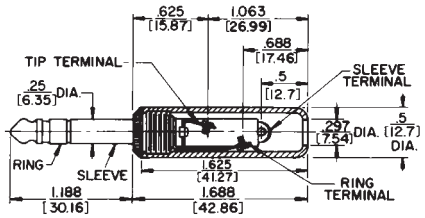

No. 260 typical — shown with screw-type terminals and plastic handle.

280 Typical

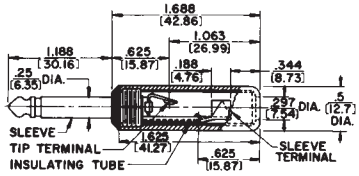

No. 280 typical — shown with solder lug terminals, cord clamp and shielded handle.

188

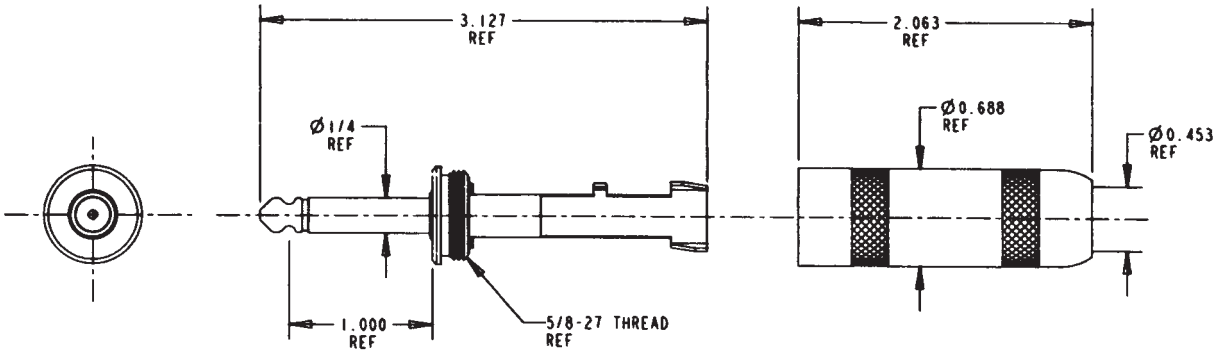

187BL

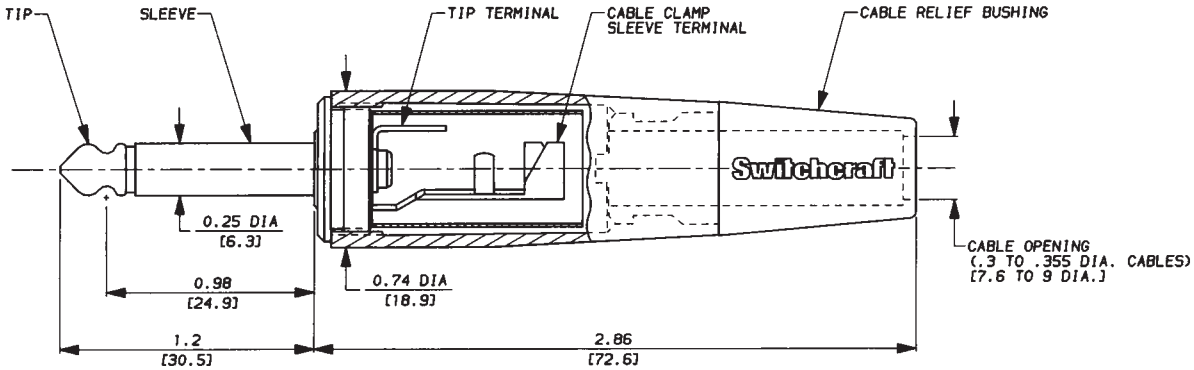

No. 187BL (Typical)

Switc

Plug Series Dimension Drawings

Littel Right Angle 1/4", Silent, Super Heavy Duty Plug Series

228 Right Angle 1/4" Plugs

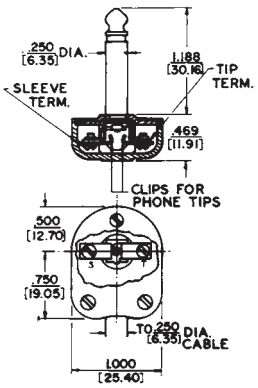

236 Right Angle 1/4" Plugs

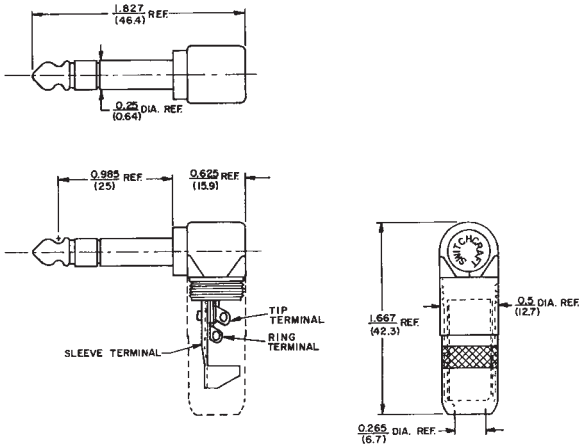

No. 236

172

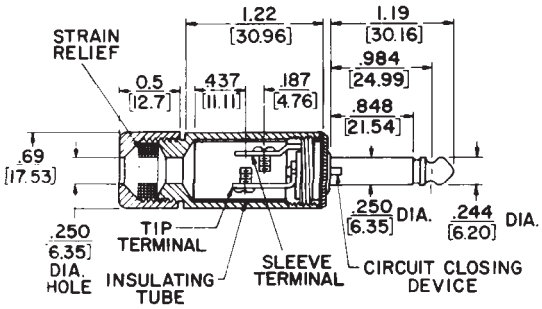

181 Silent Plug

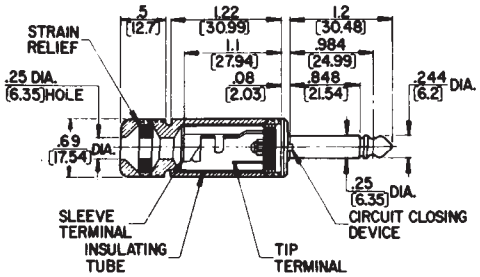

174S Super Heavy Duty Plug

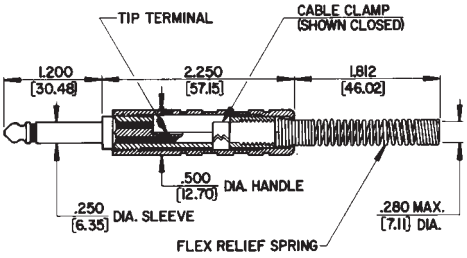

DIMENSIONS ARE FOR REFERENCE ONLY Inch / (mm)

5555 North Elston Avenue / Chicago, IL 60630
Phone: 773-792-2700 / Fax: 773-792-2129

Plug Series Drawings

Tini, Micro Plug Series

740, 750 Tini-Plugs

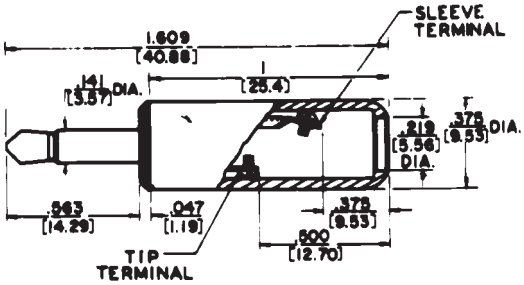

740 Screw Terminals Series

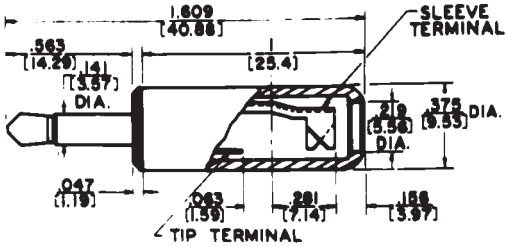

750 Clamp-Lug Terminals

850, 851 Micro Plugs

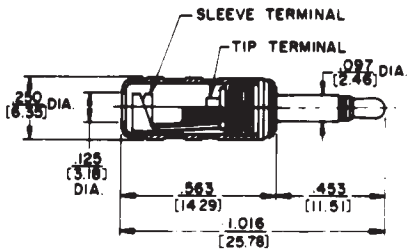

850 (typical) Series

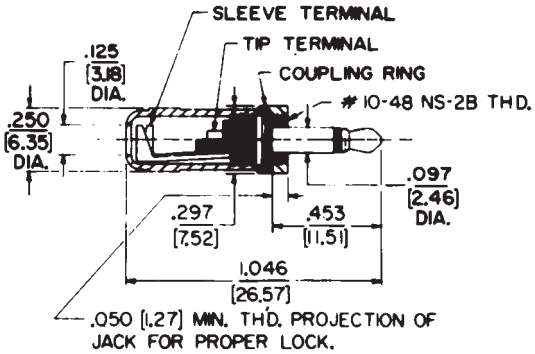

851 (typical) Series

Switcl

35HDNN, 35HDBAU, 35HDNAU

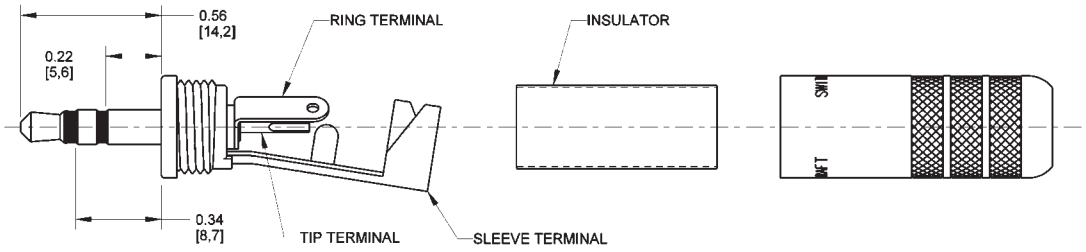

35HDRANN, 35HDRABAU, 35HDRAAU

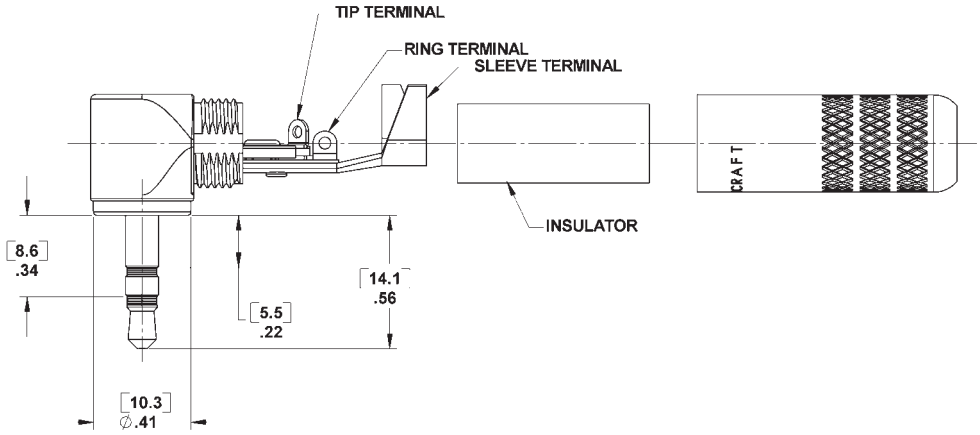

DIMENSIONS ARE FOR REFERENCE ONLY Inch (mm)

Switchcraft®
www.switchcraft.com
5555 North Elston Avenue / Chicago, IL 60630
Phone: 773-792-2700 / Fax: 773-792-2129

Plug Series Drawings

Phono and Phone Right Angle Plug Series

3502, 3502A, 35581 Phono Plug

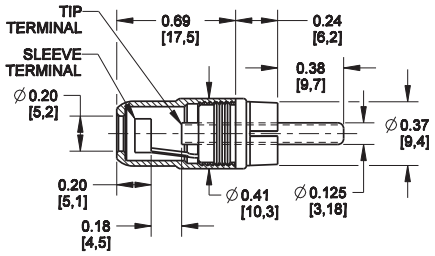

3502 Series

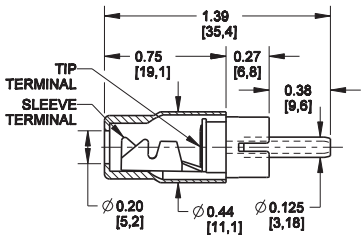

35581 Series

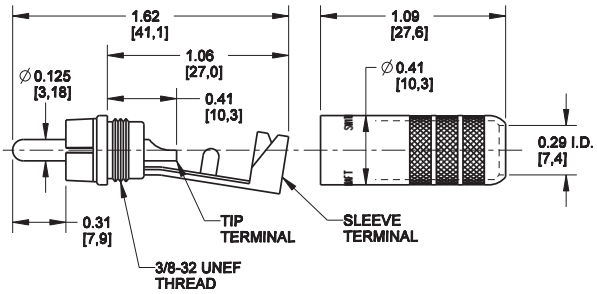

3502A Series

3502RA Plug

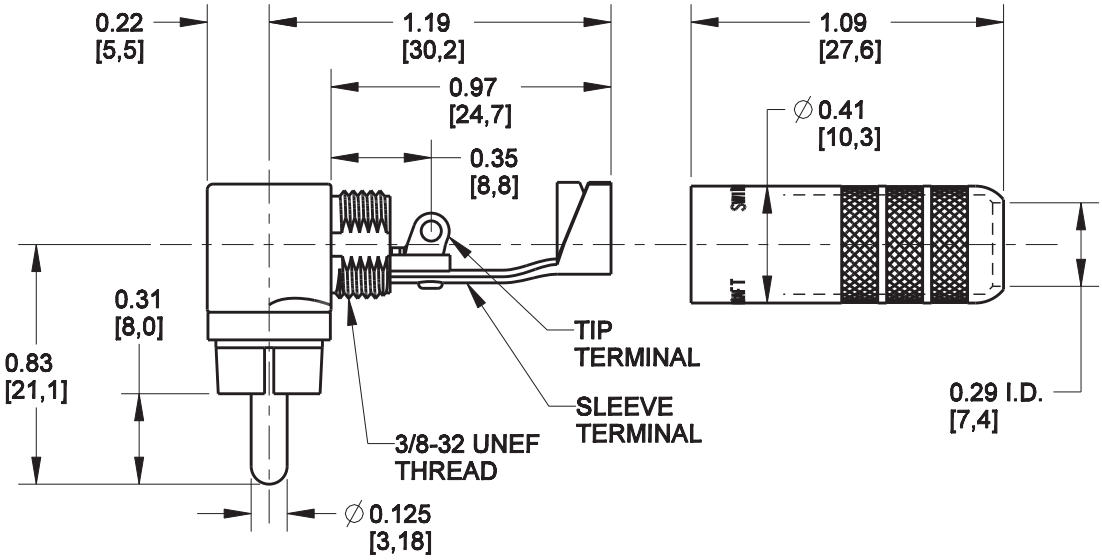

Switc

TT or Bantam, Mil-Style 1/4" Plug Series

TT253, TT253NC Plug

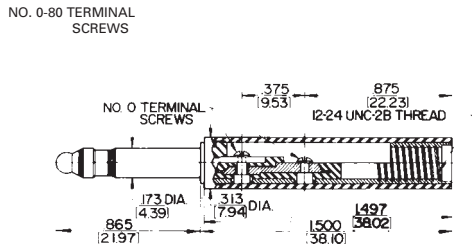

TT253 Series

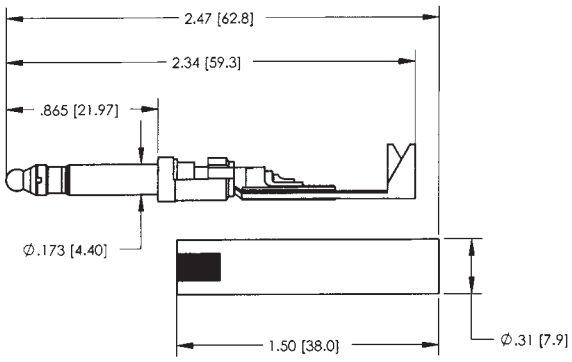

TT253NC Series

480, 482, 482NC, 484 Mil-Style 1/4" Plug

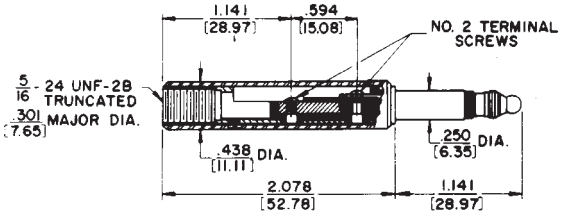

480 Series

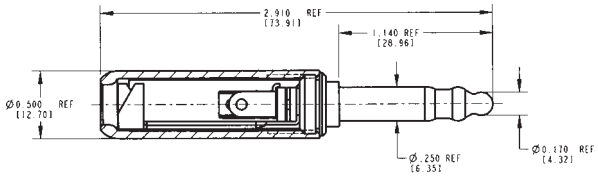

482NC Series

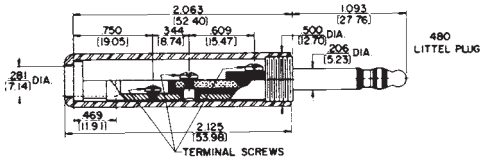

482 Series

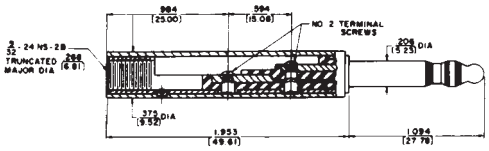

484 Series

DIMENSIONS ARE FOR REFERENCE ONLY Inch / (mm)

Switchcraft®
www.switchcraft.com
5555 North Elston Avenue / Chicago, IL 60630
Phone: 773-792-2700 / Fax: 773-792-2129

Switch Series

Guitar and Knobs, and Broadcast Switch Series

The 12000 Series switches are premium grade switches used primarily in guitars as pick-up switches. The largest names in the industry rely on our switches for quality and durability. Our 84000 Series and PL Series switches are used in broadcast studios, theater lighting, anywhere large illuminated switches are needed.

Note: Knobs must be ordered separately.

Specifications - 12000 Series

Electrical

Contact Ratings: Fine silver contacts rated at 3A, 300W maximum AC non-inductive load standard. Other contacts available
Leakage Resistance: 1,000 MW or greater
Dielectric Strength: 250 VDC

Materials

Frame: Copper alloy, plated (3,000, 13,000); Steel, plated (12,000)
Bushing and Shaft: Copper alloy, plated
Springs: Copper alloy
Knob: Black molded thermoplastic
Mounting Hardware: Knurled copper alloy locknut T10711, supplied. P10531 hex locknut, special order
Insulation: Rigid plastic spacers with plastic tubing through stack. Rigid plastic and/or thermoplastic lifters. Thermoplastic cam on actuator end

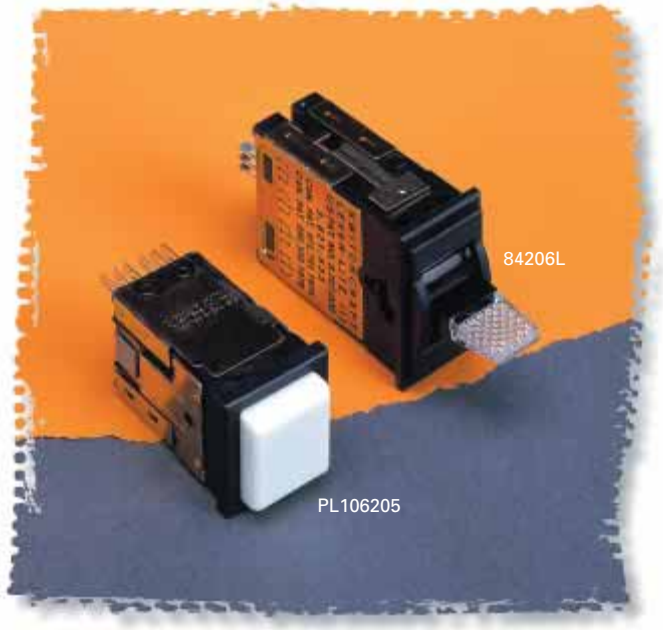

Specifications - 8400 Series

Electrical

Temperature Range: -22˚F to 158˚F (-30˚C to +70˚C)
Dielectric Strength: 1 kV DC
Leakage Resistance: 1,000 MW or greater

Materials

Mounting/Retaining Clips and Covers: Steel, plated
Contact Ratings: Gold crossbar rated at 1A, 200W Maximum AC non-inductive loads
(continued on next page)

(continued from previous page)

Springs: Copper alloy, plated
Lamp Terminals: Copper alloy, plated
Lamp Socket: Zinc, plated
Terminals: Copper alloy, plated, straight solder lugs
Housing, Escutcheon, Knob, Actuator and Switching Stacks Insulation: Molded plastic

Specifications - PL Series

PUSH-LITE Switches Series and PL Indicators

Contacts

Welded crossbar Gold Alloy, rated at 2 amps., 200 watts max., AC non-inductive load.

Electrical

6,000 Minimum Life (Gold Alloy Contacts) per UL 1054.

Materials

Push-Lite Switch Assemblies:

Housing, Lifters, Switch Modules, Barriers and Pushbuttons: Molded Plastics
Contacts Springs: Phosphor Bronze, Silver Plated
Lamp Terminals: Brass, Silver plated
Lamp Socket, Light Divider and Yoke Assembly: Nickel Silver
Mounting Bracket and Retaining Clips: Steel with iridescent iridite over Cadmium Plating

Series PL Pushbuttons:

Housing, Color Filter Inserts and Display Screens: High impact thermoplastic

PL Indicators:

Housing: Molded glass filled Plastics
Mounting Bracket: Steel, iridescent over cadmium Plating.
Lamp Retainer and Terminals: Nickel Silver.
Display Screen (Pushbutton): Molded Plastics.

Ordering Information

Part Number	Circuitry	Description
Guitar Switches		
12010	SPST(NC)/SPST(NC)	Straight, nickel finish, riveted silver contacts
12011	SPST(NC)/SPST(NC)	Straight, bright brass finish, riveted silver contacts
12012	SPDT(non-shorting)/SPST(NC)	Right angle, nickel finish, welded silver contacts
12013	SPST(NC)/SPST(NC)	Right angle, nickel finish, welded silver contacts
12014	SPST(NC)/SPST(NC)	Right angle, black finish, welded silver contacts
12015	DPDT(NC)/DPDT(NC)	Right angle, nickel finish, welded silver contacts
12016	SPST(NC)/SPST(NC)	Right angle, bright brass finish, riveted silver contacts
12017	SPST(NC/SPST(NC)	Right angle, nickel finish, welded gold contacts
Knobs		
T12742		Black
T12745		White
T127410		Ivory
P2912		Amber
Broadcast Switches		
84206L	DPDT	2 Position, locking
84306L	SPDT(non-shorting) both sides	3 Position, locking
84312L	DPDT both sides	3 Position, locking
84324L	DPDT both sides	3 Position, locking
K131		Filter kit, 3 of ea. (amb, blu, grn, red, wht, and yel)
PL106205	DPDT	Momentary, single lamp
PL206205	DPDT	Momentary, twin lamp
PL106705	DPDT	Push-lock/Push-release, single lamp
PL206705	DPDT	Push-lock/Push-release, twin lamp

See Next Page for Mechanical Drawings

5555 North Elston Avenue / Chicago, IL 60630
Phone: 773-792-2700 / Fax: 773-792-2129

Switch Series Drawings

Guitar and Knobs, and Broadcast Switch Series

12000 Series RA Lev-R® Switches

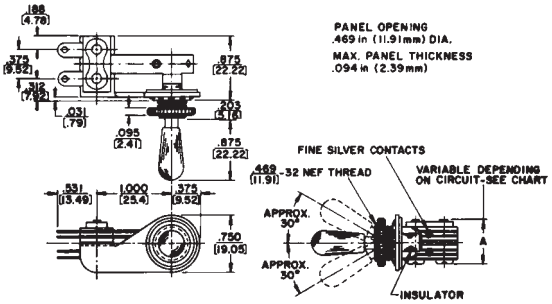

12000 Series Straight Lev-R® Switches

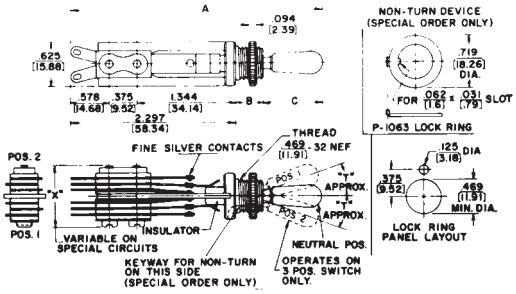

84000 Series Lever-Lite® Switches

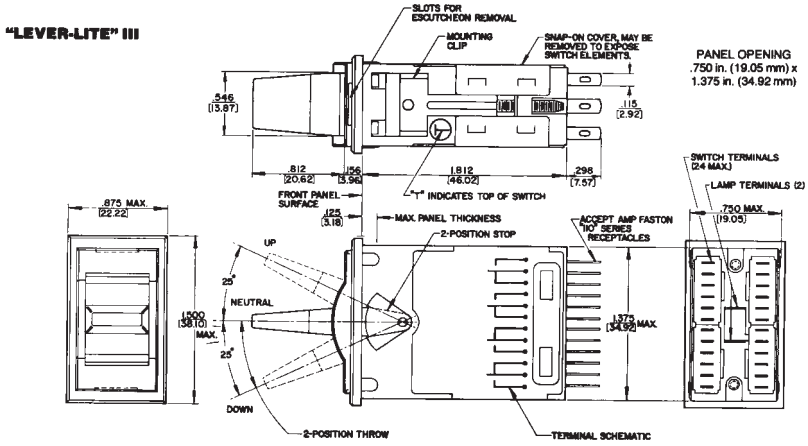

PL Series Push-Lite® Switches

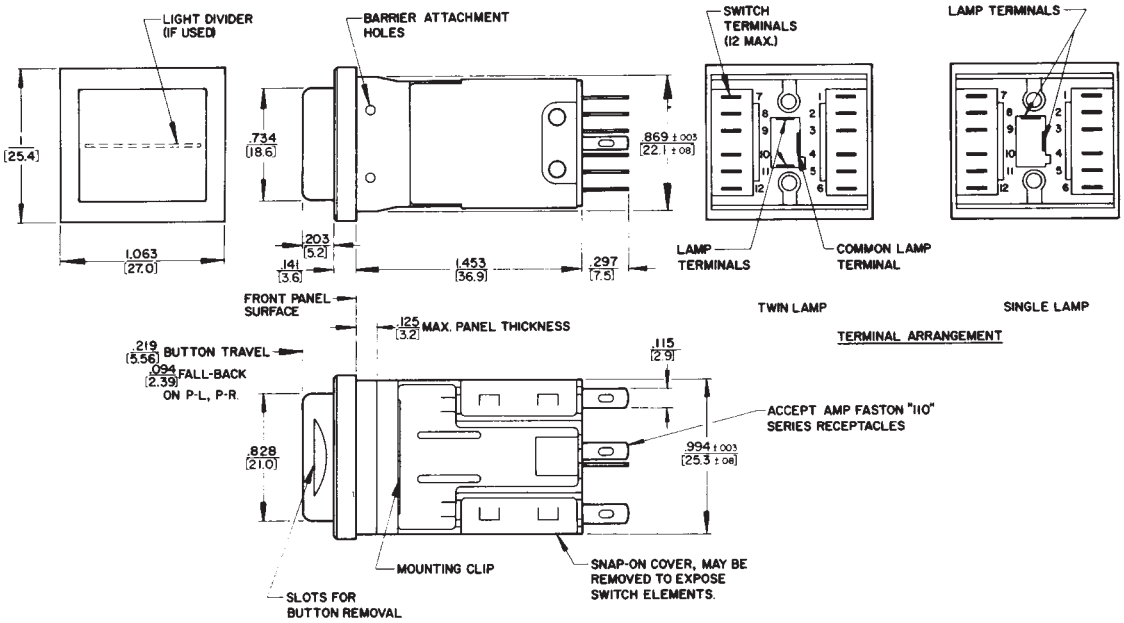

* Please visit the product pages on our website for the most up-to-date product information

NOTES

DIMENSIONS ARE FOR REFERENCE ONLY Inch (mm)

Switchcraft®
www.switchcraft.com
5555 North Elston Avenue / Chicago, IL 60630
Phone: 773-792-2700 / Fax: 773-792-2129

INDEX

05AD05 45
05AK05 45
05AK25 45
05AN05 45
05AN15 45
05AN25 45
05AN80 45
05AU05 45
05AU80 45
05BL5M 53
05DL5M 53
05GM5M 53
10BF10 45
10BK10 45
10BN10 45
11 66
111 66
112B 66
113BPC1M 66
114B 66
114BPC 66
114BPC1M 66
114BPCS 66
120 66
12010 95
12011 95
12012 95
12013 95
12014 95
12015 95
12016 95
12017 95
121 66
1238 66
125 68
128 66
12A 66
12B 66
131 66
133 66
142A 68
14B 66
151 68
152 68
152B 68
153 68
154 68
155 68
15AK15 45
172 84
174S 84
181 84
184 84
187 84
187B 84
188 84
18QD18 45
18QF18 45
18QH18 45
20QD20N 45
20QF20N 45
20QH20N 45
226 84
228 84
236 84
238 84
240 84
245 84
250 84
2501F 53
2501M 53
2501MP 53
25AF25 45
25AK25 45
25AK82 45
25AN25 45
260 84
267 84
270 84
280 84
281 84
285 84
285L 84
290 84
297 84
299 84
30AK30 45
30AN30 45
30AR30 45
321 63
322 63
323 63
324 63
330F1 64
330F2 64
330P 64
332A 64
336A 64
340 64
345A 64
349A 64
3501FP 70
3501FR 70
3502 86
3502A 86
3502AAU 86
3502ABAU 86
3502L 86
3502RA 86
3502RAAU 86
3502RABAU 86
3503 70
3514PC 70
3517PC 70
352A 64
35581 86
35582 86
35585 86
35HDBAU 86
35HDNAU 86
35HDNN 86
35HDRAAU 86
35HDRABAU 86
35HDRANN 86
35PM1 68
35PM2A 68
35RAPC2AV 68
35RAPC2BH3 68
35RAPC3BH3 68
35RAPC4BH3 68
35RAPC7J 68
35RAPC7JS 68
361A 64
362A 64
363 64
365 64
370A 64
374 64
376 64
377 64
383A 63
384A 63
386A 63
387A 63
389 63
390 63
41 68
42A 68
44 64
480 87
482 87
482N 87
482NC 87
482NCP 87
483 87
483N 87
483NC 87
483NCP 87
484 87
485NC 87
516-090-000-301 20
516-090-000-302 20
516-120-000-101 20
516-120-000-102 20
516-290-500 20
516-290-590 20
57GB5F 53
57PC5F 53
57PC5FS 53
580 84
712A 71
722A 71
732A 71
740 86
750 86
755 86
760 71
760K 71
765 71
780 86
80 66
830 66
84206L 95
84306L 95
84312L 95
84324L 95
850 86
851 86
855 86
860 71
865 71
88 66
880 86
881 86
A*F 46
A*FB 46

Switc

INDEX

A*FBAU 46
A*FL 46
A*M 46
A*MB 46
A*MBAU 46
A*ML 46
AA*F 46
AA*FB 46
AA*FBAU 46
AA*FL 46
AA*M 46
AA*MB 46
AA*MBAU 46
AA*ML 46
AAA*FBAUZ 46
AAA*FBZ 46
AAA*FPBAUZ 46
AAA*FPBZ 46
AAA*FPZ 46
AAA*FZ 46
AAA*MBAUZ 46
AAA*MBZ 46
AAA*MPBAUZ 46
AAA*MPBZ 46
AAA*MPZ 46
AAA*MZ 46
B*F 47
B*FB 47
B*M 47
B*MB 47
BPJF** 70
BPJF**AU 70
BPJJ** 70
BPJJ**AU 70
BPJR** 70
BPJR**AU 70
C*F 47
C*FB 47
C*M 47
C*MB 47
D*F 47
D*FB 47
D*FBAU 47
D*FS 47
D*M 47
D*MB 47
D*MBAU 47
D*MS 47
E111L 68
E112BL 68
E3FSC 47
E3FSCB 47
E3FSCBAU 47
E3MSC 47
E3MSCB 47
E3MSCBAU 47
EH13942 52
EHBNC2 52
EHBNCSC 52
EHCAT62 52
EHRCA2 52
EHRCABNC 52
EHUSB2 52
HP75BNC1 54
HP75BNC12 54
HP75BNC2 54
HP75BNC7 54
HP75BNC9 54
HPCC4F 51
HPCC4RAF 51
HPCI4F 51
HPCP410PC 50
HPCP410RA 50
HPCP41F 50
HPCP41F1 50
HPCP420PC 50
HPCP420RA 50
HPCP42F 50
HPCP42F1 50
HPCPK112F 30
HPCPK112F1 30
HPCPK1B 30
HPCPK324F 30
HPCPK324F1 30
HPCPK3B 30
HPCPR410PC 50
HPCPR41F 50
HPCPR41F1 50
HPCPR420PC 50
HPCPR42F 50
HPCPR42F1 50
J3FS 48
K131 95
K3FS 48
K459 4
K460 4
MBPK175T 43
MD10 45
MD15 45
MD3 45
MD6 45
MT334B 70
MT48FN 26
MT48HN 26
MT48K1FN 24
MT48K1HN 24
MT48K1NN 24
MT48K1NS 24
MT48K3FN 24
MT48K3HN 24
MT48K3NN 24
MT48NN 26
MT48NS 26
MT52FN 26
MT52HN 26
MT52K1FN 24
MT52K1HN 24
MT52K1NN 24
MT52K1NS 24
MT52K3FN 24
MT52K3HN 24
MT52K3NN 24
MT52NN 26
MT52NS 26
MTP24K7 18
MTP48K1NO 14
MTP48K1NS 14
MTP48K3BPNS 18
MTP48K3NO 14
MTP48K3NS 14
MTP48K3PBNO 18
MTP48K3SNO 14
MTP52K3BPNO 18
MTPFA48K1NO 8
MTPFA48K1NS 8
MTPH48K1NO 5
MTPH48K1NS 5
MTPH48K3NO 5
MTPH48K3NS 5
MTPH48K3SNO 5
MVEZNPK175T 42
MVJ*75T 39
MVJ*NT 39
MVP32K1*75T 37
MVP32K1*NT 37
MVP32K2*75T 37
MVP32K2*NT 37
MVP32K3*75T 37
MVP32K3*NT 37
P*F 48
P*FB 48
P*M 48
P*MB 48
P2912 95
PC142A 68
PD3FSC1 48
PD3FSC1AU 48
PD3MSC1 48
PD3MSC1AU 48
PL106205 95
PL106705 95
PL206205 95
PL206705 95
PT1LA 4
PT2B 4
QGPK116FB 32
QGPK116MB 32
QGPK18M8FB 32
QGPK1B 32
QGPK332MFB 32
QGPK3B 32
R*FBAUZ 48
R*FBZ 48
R*FZ 48
R*MBAUZ 48
R*MBZ 48
R*MZ 48
RA49B11 66
RA49C14B 66
RN112APC 66
RS422H48N081 12
RS422H4N161 12
RS422H4N162 12
RS422H4N242 12
RS422V4N081 12
RS422V4N161 12
RS422V4N162 12
RS422V4N242 12
RS422V4N322 12
S3F5M 63
S3FM 63
S5F3M 63
S760 71
S760K 71
S765 71
T127410 95

Switchcraft®
www.switchcraft.com
5555 North Elston Avenue / Chicago, IL 60630
Phone: 773-792-2700 / Fax: 773-792-2129

INDEX

T12742 95
T12745 95
T3F 48
TA*F 49
TA*FB.....49
TA*FL 49
TA*M.....49
TA*MB 49
TA*ML.....49
TA01 63
TA02 63
TA04 63
TA05 63
TB*M 49
TB*MB 49
TT1 45
TT10 45
TT122 45
TT124 45
TT126 45
TT127 45
TT128 45
TT2 45
TT253 87
TT253N.....87
TT253NC 87
TT254 87
TT254N.....87
TT254NC 87
TT3 45
TT34B 70
TT34BN 81
TT34BNY.....70
TT4 45
TT5 45
TT6 45
TT7 45
TT8 45
TT9 45
TT96EDACNO.....20
TT96EDACNS 20
TTD1.....45
TTD10.....45
TTD2.....45
TTD3.....45
TTD4.....45
TTD5.....45
TTD6.....45
TTD7.....45
TTD8.....45
TTD9.....45
TTEZN****0 10
TTP96ASFN.....28
TTP96ASHN 28
TTP96ASNN 28
TTP96K1FN 22
TTP96K1HN 22
TTP96K1NN 22
TTP96K3BPNS 18
TTP96K3FN 22
TTP96K3HN 22
TTP96K3NN 22
TTP96K5BPNS 18
TTPFA96K1NO 8
TTPFA96K1NS 8
TTPH96K1NO 5
TTPH96K1NS 5
TTPH96K3NO 5
TTPH96K3NS 5
TTPW96K1HN.....16
TTPW96K1NN.....16
TTPW96K1NS 16
TTPW96K3HN.....16
TTPW96K3NN.....16
TTPW96K3NS 16
TY*F 49
VAPK1HD*75T.....40
VAPK1HD*NT 40
VAPK1SD*75T 40
VAPK1SD*NT.....40
VAPK3HD*75T.....40
VAPK3HD*NT 40
VAPK3SD*75T 40
VAPK3SD*NT.....40
VJHD*75TX.....36
VJHD*NTX.....36
VJSD*75TX.....36
VJSD*NTX 36
VMAFN.....40
VMPP 44
VMVHD*75T.....40
VMVHD*NT 40
VMVSD*75T 40
VMVSD*NT.....40
VPP24K1HD*75T.....34
VPP24K1HD*NT.....34
VPP24K1SD*75T.....34
VPP24K1SD*NT 34
VPP24K3HD*75T.....34
VPP24K3HD*NT.....34
VPP24K3SD*75T.....34
VPP24K3SD*NT 34
VPP26K1HD*75T.....34
VPP26K1HD*NT.....34
VPP26K1SD*75T.....34
VPP26K1SD*NT 34
VPP26K3HD*75T.....34
VPP26K3HD*NT.....34
VPP26K3SD*75T.....34
VPP26K3SD*NT 34
VSPP.....44
WMT334B.....70
WTT34B 70
YMT334BN 70
Z15J.....66

Switc

НИОКР СИСТЕМС

ООО «НИОКРсистемс» - это оперативные поставки широкого спектра электронных компонентов отечественного и импортного производства напрямую от производителей и с крупнейших мировых складов. Реализуемая нашей компанией продукция насчитывает более полумиллиона наименований.

Благодаря этому наша компания предлагает к поставке практически не ограниченный ассортимент компонентов как оптовыми, мелкооптовыми партиями, так и в розницу.

Благодаря развитой сети поставщиков, помогаем в поиске и приобретении экзотичных или снятых с производства компонентов.

Наша компания это:

- Гарантия качества поставляемой продукции
- Широкий ассортимент
- Минимальные сроки поставок
- Техническая поддержка
- Подбор комплектации
- Индивидуальный подход
- Гибкое ценообразование
- Работаем по 275 ФЗ

ООО «НИОКР СИТЕМС»
Москва, 125362, Россия, ул. Вишневая, д. 9, к. 1, Блок 104 а и 104 в

Телефон: 8 (495) 268-14-82
Email: n@nsistems.ru

ИНН: 7735154786
ОГРН: 1167746717709